SECTION 8

MULE-HIDE PRODUCTS CO., INC.

EPDM
Standard Details

MULE-HIDE PRODUCTS CO., INC.
EPDM STANDARD DETAILS

TABLE OF CONTENTS

Roof Edge Treatment **Detail No.**

Drip Apron * MHE-101
Drip Apron/Gutter..... MHE-102
All Purpose Bar * MHE-103
Ballasted Retainer *..... MHE-104
Gravel Stop (Snap Lock) *..... MHE-105
Gravel Stop * MHE-106
Gravel Stop (Scupper)..... MHE-107
Drip Edge at Mansard..... MHE-108

Splices/RMS

3” Seam-Adhesive MHE-110
3” Seam-3"Tape MHE-111
3” Seam– Cover Tape *..... MHE-111A
6” Seam-6"Tape * MHE-111B
8” Seam-2” Barbed Plates-Adhesive..... MHE-112
6” Seam -2” Barbed Plates-6" Tape *..... MHE-112A
6” Seam -A-P 40 Bar- 6" Tape * MHE-112B
7” Seam -A-P Bar-Adhesive MHE-113
7” Seam -A-P Bar-Tape * MHE-114
7” Seam -A-P 40 Bar-Tape * MHE-114A
6” Seam -Adhesive MHE-115
End Laps and “T” Joints MHE-118
RMS Strip – Fastener Layout MHE-119
RMS Strip -Tape – Fastener Layout * MHE-119A

Parapet/Curb Flashing

A-P Bar-Vertical-Adhesive..... MHE-120
A-P Bar-Vertical- 3" Tape MHE-120A
A-P Bar-Vertical-Cover Tape * MHE-120B
A-P Bar-Vertical-6" Tape *..... MHE-120C
2” Barbed Plates-Vertical-Adhesive..... MHE-121
2" Barbed Plates-Vertical-3" Tape..... MHE-121A
2" Barbed Plates-Vertical- cover Tape *. MHE-121B
2" Barbed Plates-Vertical-6" Tape * MHE-121C
A-P Bar-Horizontal-Adhesive..... MHE-122
A-P Bar-Horizontal-3" Tape..... MHE-122A
A-P Bar-Horizontal-Cover Tape * MHE-122B
A-P Bar-Horizontal-6" Tape *..... MHE-122C
2” Barbed Plate-Horizontal-Adhesive MHE-123
2” Barbed Plate-Horizontal-3" Tape MHE-123A
2” Barbed Plate-Horizontal-Cover Tape* MHE-123B
2” Barbed Plate-Horizontal-6" Tape* MHE-123C
RMS Strip-Vertical-Adhesive MHE-124
RMS Strip-Vertical - Tape * MHE-124A
RMS Strip-Horizontal-Adhesive..... MHE-125
RMS Strip-Horizontal-Tape * MHE-125A

Drains **Detail No.**

Roof Drain * MHE-130
Roof Drain -Tapered *..... MHE-131
Roof Drain W/Sump..... MHE-132
Drain Insert MHE-133
Through Wall Scupper MHE-134B
Through Wall Overflow MHE-135

Pipe Flashings

Premolded Pipe Boot-M/A-Adhesive MHE-140
Premolded Pipe Boot-MA-Tape * MHE-140A
Premolded Pipe Boot-Adhesive..... MHE-140B
Premolded Pipe Boot-Tape * MHE-140C
Field Fabricated Pipe-Adhesive..... MHE-141
Field Fabricated Hot Pipe-Adhesive MHE-142
Field Fabricated Pitch Pan-Adhesive MHE-143
Pourable Sealer Pocket *..... MHE-144

Expansion Joints

Field Joint * MHE-150
Existing Field Joint “A” *..... MHE-151
Existing Field Joint “B” *..... MHE-152
Field Joint – RMS Strip-Adhesive..... MHE-153A
Field Joint – RMS Strip-Tape * MHE-153B
Deck to Wall Joint “A”–RMS Strip-Adh ... MHE-154
Deck to Wall Joint “A”–RMS-Tape * MHE-154B
Deck to Wall Joint “B”–RMS Strip-Adh ... MHE-155A
Deck to Wall Joint “B”–RMS-Tape * MHE-155B
Deck to Wall Joint “C”-Adhesive..... MHE-156A
Deck to Wall Joint “C”-Tape * MHE-156B
Curb/Firewall-Adhesive..... MHE-157A
Curb/Firewall-Tape *..... MHE-157B

EPDM Tie-ins

EPDM/BUR – Envelope..... MHE-160A
EPDM/BUR – Envelope W/Tape MHE-160B
EPDM/BUR (Smooth) MHE-161A
EPDM/BUR (Smooth) W/Tape MHE-161B
Hot Stripping MHE-162
EPDM/Shingles – W/RMS MHE-163
EPDM/Shingles – W/RMS & Tape..... MHE-163A
EPDM/ Shingles – A-P Bar MHE-164

* Approved for use in 20-Year warranted Systems.

MULE-HIDE PRODUCTS CO., INC.
EPDM STANDARD DETAILS

TABLE OF CONTENTS

Vertical Terminations **Details No.**

All Purpose Bar (A-P Bar)..... MHE-170
Reglet MHE-171
Metal Coping..... MHE-172
Counter Flashing MHE-173
Counter Flashing W/A-P Bar *..... MHE-174
Stone Coping *..... MHE-175

Miscellaneous

Lightning Rod, Vertical MHE-180
Lightning Rod, Horizontal MHE-181
Sleeper MHE-182
Outside Corner *..... MHE-183
Inside Corner *..... MHE-184
Outside Corner – 1 Piece MHE-186
Ridge Attachment – RMS MHE-190
Perimeter Sheet Layout..... MHE-191
Perimeter Sheet Layout – W/RMS MHE-192

Insulation Attachment

Extruded Polystyrene Insulations MHT-MA-700
Insulation Attachment Patterns..... MHT-MA-701
Mule-Hide – 8 Field Fasteners. MHT-FA-720
Mule-Hide – 12 Field Fasteners. MHT-FA-721
Mule-Hide – 16 Field Fasteners MHT-FA-722
Mule-Hide – 17 Field Fasteners MHT-FA-723
Factory Mutual - 8 Field Fasteners..... MHT-FM-724
Factory Mutual - 12 Field Fasteners.... MHT-FM-725
Factory Mutual - 16 Field Fasteners.... MHT-FM-726
Factory Mutual - 17 Field Fasteners.... MHT-FM-727

PLEASE CONSULT THE MULE-HIDE WEBSITE FOR THE MOST CURRENT INFORMATION AT WWW.MULEHIDE.COM

* Approved for use in 20-Year warranted Systems.

FASTENING PATTERNS FOR EXTRUDED POLYSTYRENE INSULATION
FOR USE DIRECTLY UNDER MECHANICALLY ATTACHED WHITE TPO
REINFORCED MEMBRANE ONLY

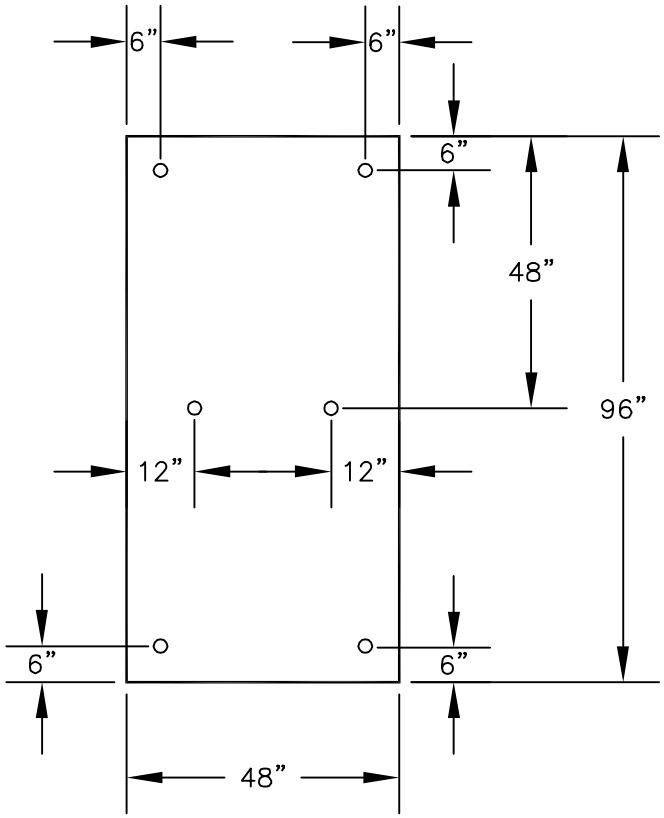

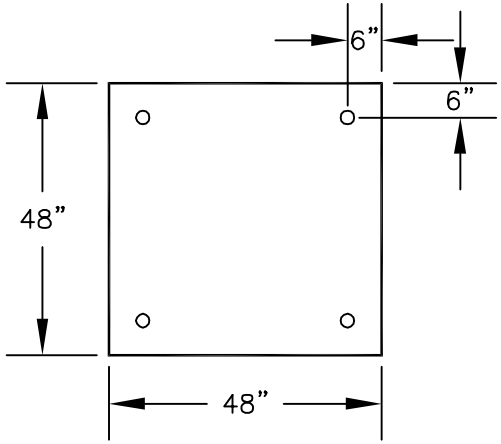

NOTES:

1. MULE–HIDE 3" METAL STRESS PLATES MUST BE USED WITH MULE–HIDE FASTENERS FOR INSULATION ATTACHMENT.

2. FASTENER TOLERANCE SHALL BE ±1 INCH.

MULE-HIDE PRODUCTS CO., INC.	**EXTRUDED POLYSTYRENE INSULATION ATTACHMENT FASTENING PATTERNS** **SYSTEMS:** **MECHANICALLY ATTACHED**	**DETAIL NO.:** **MHT-MA-700** REVISION DATE: 01/2013

®

2" OR THICKER POLYISOCYANURATE INSULATION ONLY

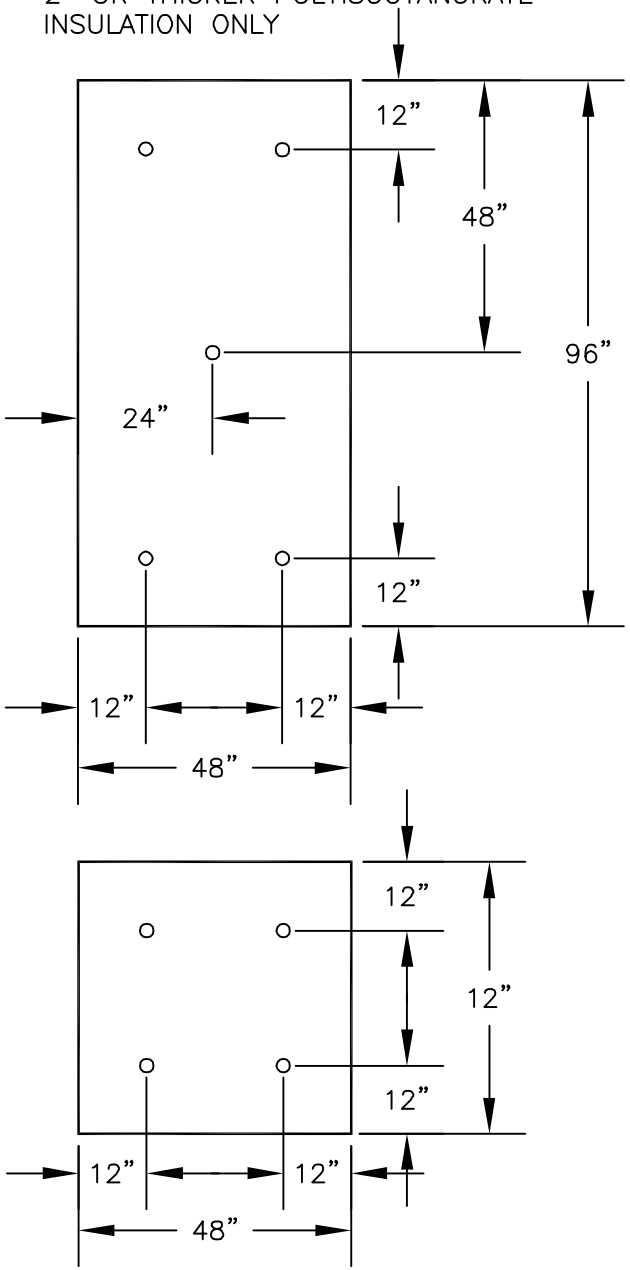

ALL OTHER INSULATIONS

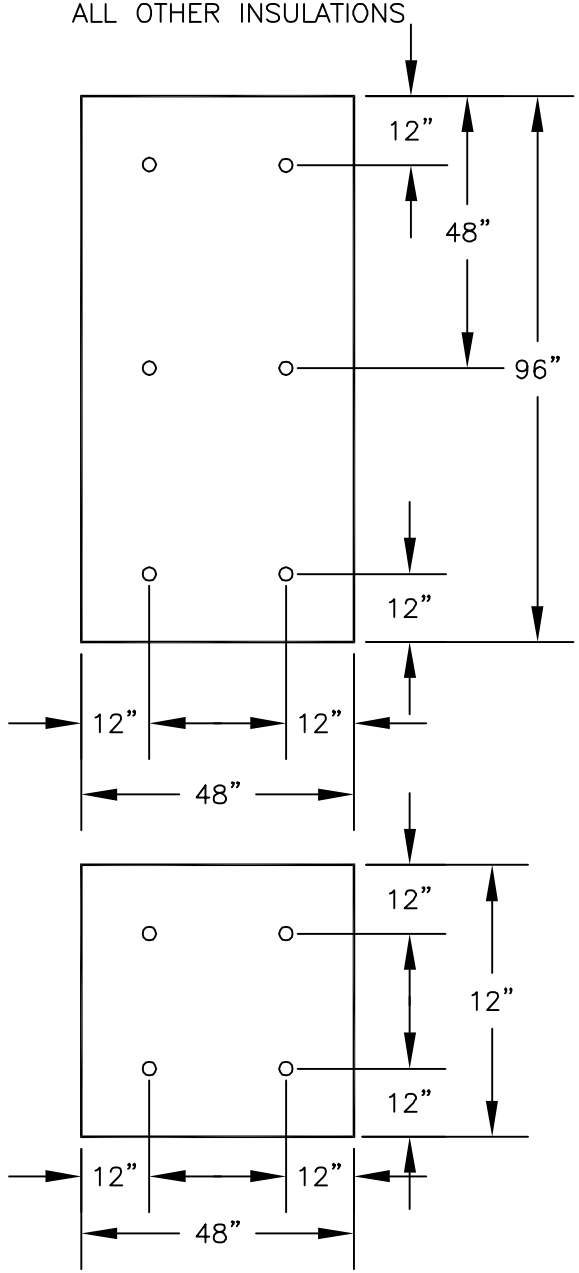

NOTES:

1. MULE–HIDE 3" METAL STRESS PLATES MUST BE USED WITH MULE–HIDE FASTENERS FOR INSULATION ATTACHMENT.

2. FASTENER TOLERANCE SHALL BE +1 INCH.

MULE-HIDE PRODUCTS CO., INC.	**INSULATION ATTACHMENT PATTERNS**	**DETAIL NO.:**
	SYSTEMS:	**MHT-MA-701**
	MECHANICALLY ATTACHED	REVISION DATE: 01/2013

®

NOTES:

1. 8 FASTENERS PER 4' X 8' BOARDS (1 FASTENER EVERY 4 SQUARE FEET) IN THE FIELD IS APPROVED FOR INSULATIONS 2" OR MORE THICK WHEN USED AS THE TOP LAYER.

2. PERIMETER AND CORNER DIMENSIONS ARE TO BE A MINIMUM OF 8' WIDE UNLESS THE PROJECT REQUIRES FACTORY MUTUAL COMPLIANCE. CONTACT MULE-HIDE TECHNICAL DEPARTMENT FOR FACTORY MUTUAL REQUIREMENTS.

3. MULE-HIDE FASTENERS AND 3" STRESS PLATES MUST BE USED FOR INSULATION ATTACHMENT.

4. REFER TO MULE-HIDE WIND UPLIFT RATINGS FOR APPROPRIATE FASTENER DENSITY REQUIRED.

5. FASTENER DENSITY INCREASES BASED ON THE FOLLOWING:
   - 50% FOR PERIMETERS
   - 100% FOR CORNERS

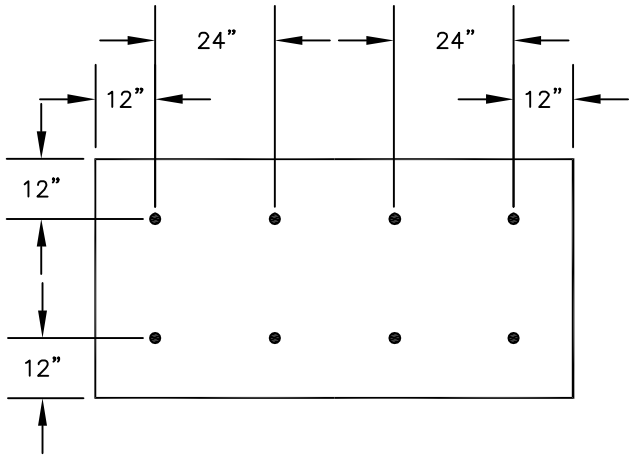

FIELD (8)
1 FASTENER PER EVERY 4 SQ. FT.

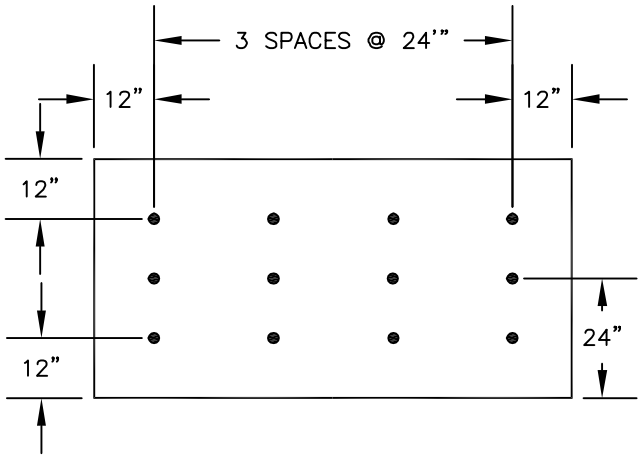

PERIMETER (12)
1 FASTENER PER EVERY 2.66 SQ. FT.

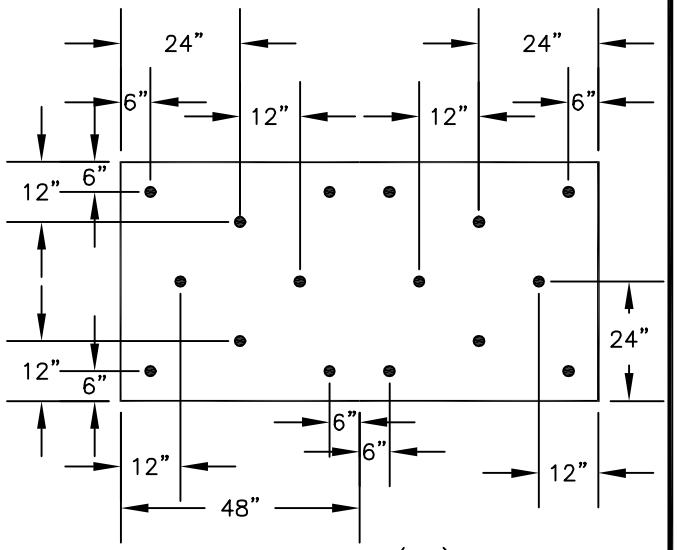

CORNERS (16)
1 FASTENER PER EVERY 2 SQ. FT.

MULE-HIDE PRODUCTS CO., INC.	**2" OR THICKER INSULATION ATTACHMENT 8 FASTENERS PER 4' X 8' IN FIELD** **SYSTEMS:** **FULLY ADHERED**	**DETAIL NO.:** **MHT-FA-720** REVISION DATE: 01/2013

®

NOTES:

1. 12 FASTENERS PER 4' X 8' BOARD IN THE FIELD IS APPROVED FOR 1–1/2" TO 2" THICK POLYISOCYANURATE INSULATIONS WHEN USED AS THE TOP LAYER OR ¼" DENS DECK INSTALLED AS A COVER BOARD.

2. PERIMETER AND CORNER DIMENSIONS ARE TO BE A MINIMUM OF 8' WIDE UNLESS THE PROJECT REQUIRES FACTORY MUTUAL COMPLIANCE. CONTACT MULE–HIDE TECHNICAL DEPARTMENT FOR FACTORY MUTUAL REQUIREMENTS.

3. MULE–HIDE FASTENERS AND 3" STRESS PLATES MUST BE USED FOR INSULATION ATTACHMENT.

4. REFER TO MULE–HIDE WIND UPLIFT RATINGS FOR APPROPRIATE FASTENER DENSITY REQUIRED.

5. FASTENER DENSITY INCREASES BASED ON THE FOLLOWING:
   - 50% FOR PERIMETERS
   - 100% FOR CORNERS

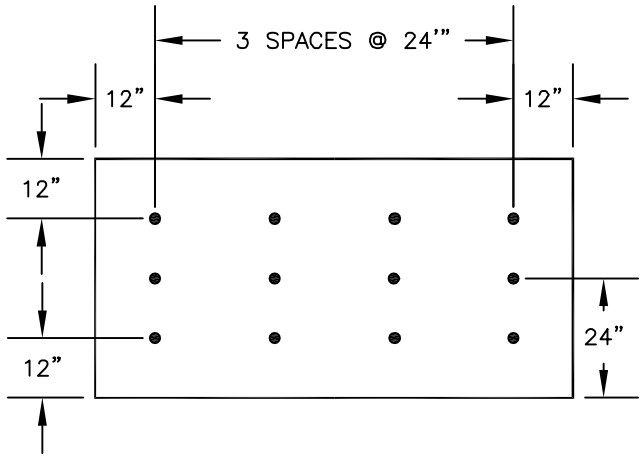

FIELD (12)
1 FASTENER PER EVERY 2.66 SQ. FT.

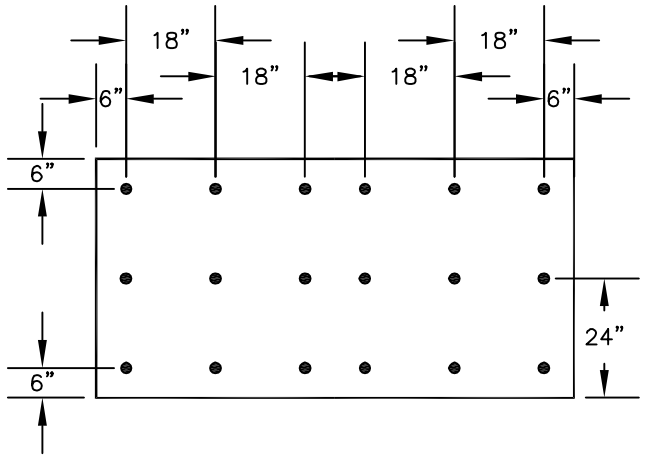

PERIMETER (18)
1 FASTENER PER EVERY 1.77 SQ. FT.

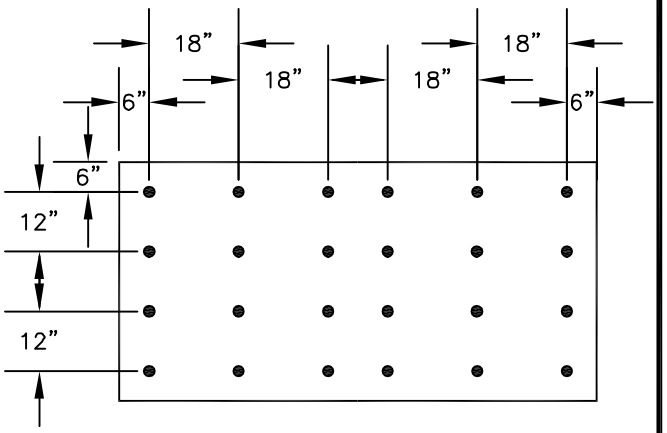

CORNERS (24)
1 FASTENER PER EVERY 1.33 SQ. FT.

MULE-HIDE PRODUCTS CO., INC.	**INSULATION ATTACHMENT 12 FASTENERS PER 4' X 8' IN FIELD** **SYSTEMS:** **FULLY ADHERED**	**DETAIL NO.:** **MHT-FA-721** REVISION DATE: 01/2013

®

NOTES:

1. 16 FASTENERS PER 4' X 8' BOARD IN THE FIELD IS MULE-HIDE'S STANDARD FOR FULLY ADHERED TPO ROOFING SYSTEMS.

2. PERIMETER AND CORNER DIMENSIONS ARE TO BE A MINIMUM OF 8' WIDE UNLESS THE PROJECT REQUIRES FACTORY MUTUAL COMPLIANCE. CONTACT MULE-HIDE TECHNICAL DEPARTMENT FOR FACTORY MUTUAL REQUIREMENTS.

3. MULE-HIDE FASTENERS AND 3" STRESS PLATES MUST BE USED FOR INSULATION ATTACHMENT.

4. REFER TO MULE-HIDE WIND UPLIFT RATINGS FOR APPROPRIATE FASTENER DENSITY REQUIRED.

5. FASTENER DENSITY INCREASES BASED ON THE FOLLOWING:
   - 50% FOR PERIMETERS
   - 100% FOR CORNERS

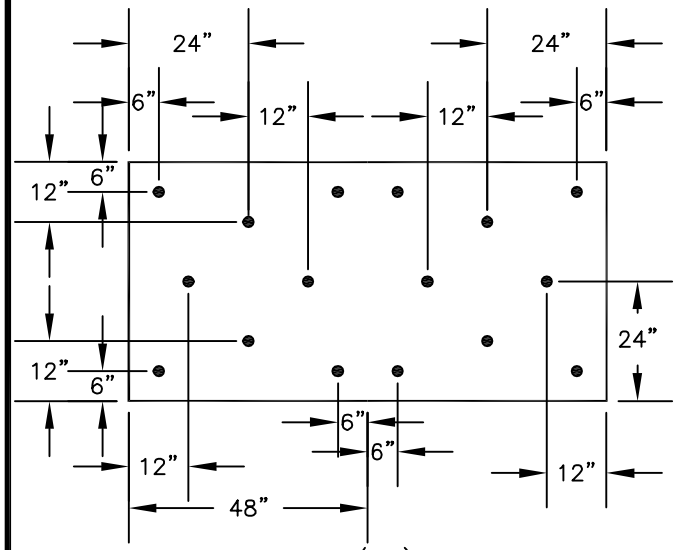

FIELD (16)
1 FASTENER PER EVERY 2 SQ. FT.

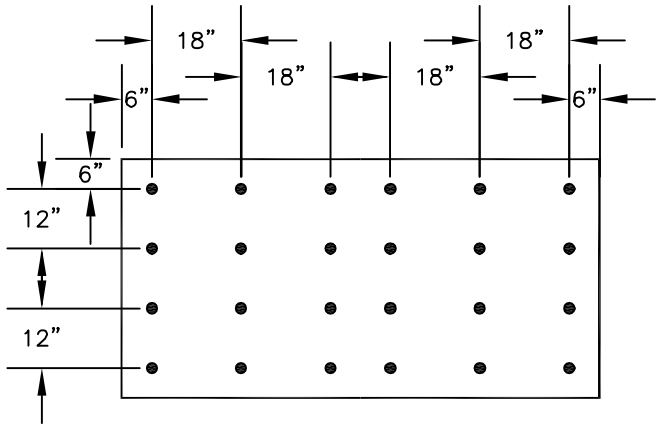

PERIMETER (24)
1 FASTENER PER EVERY 1.33 SQ. FT.

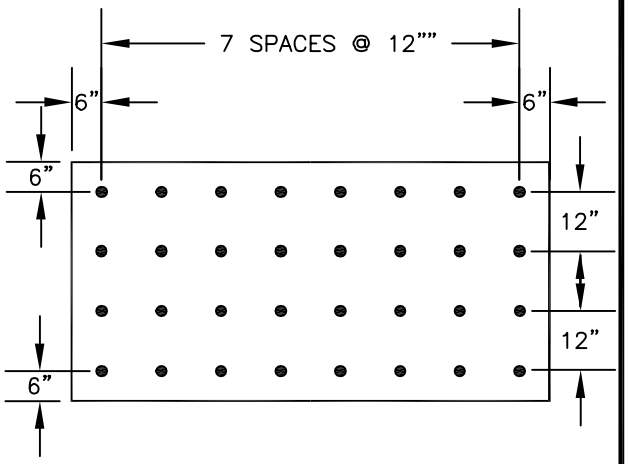

CORNERS (32)
1 FASTENER PER EVERY 1 SQ. FT.

MULE-HIDE PRODUCTS CO., INC.	**INSULATION ATTACHMENT 16 FASTENERS PER 4' X 8' IN FIELD** **SYSTEMS:** **FULLY ADHERED**	**DETAIL NO.:** **MHT-FA-722** REVISION DATE: 01/2013

®

NOTES:

1. 17 FASTENERS PER 4' X 8' BOARD IN THE FIELD IS APPROVED FOR OSB COVER BOARDS OR OSB/POLYISOCYANURATE COMPOSITE INSULATION.

2. PERIMETER AND CORNER DIMENSIONS ARE TO BE A MINIMUM OF 8' WIDE UNLESS THE PROJECT REQUIRES FACTORY MUTUAL COMPLIANCE. CONTACT MULE-HIDE TECHNICAL DEPARTMENT FOR FACTORY MUTUAL REQUIREMENTS.

3. MULE-HIDE FASTENERS AND 3" STRESS PLATES MUST BE USED FOR INSULATION ATTACHMENT.

4. REFER TO MULE-HIDE WIND UPLIFT RATINGS FOR APPROPRIATE FASTENER DENSITY REQUIRED.

5. FASTENER DENSITY INCREASES BASED ON THE FOLLOWING:
   - 50% FOR PERIMETERS
   - 100% FOR CORNERS

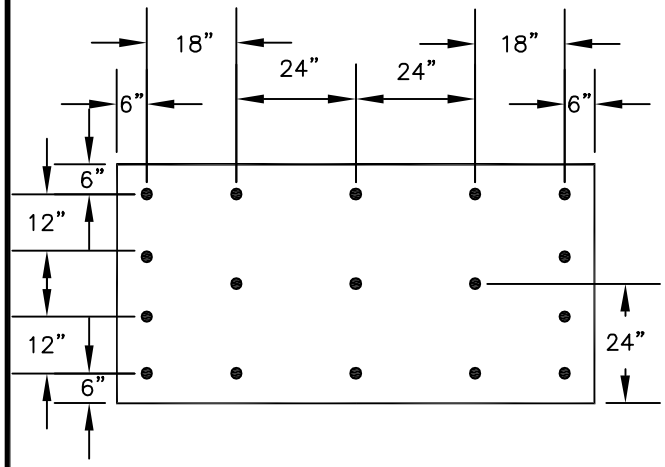

FIELD (17)
1 FASTENER PER EVERY 1.88 SQ. FT.

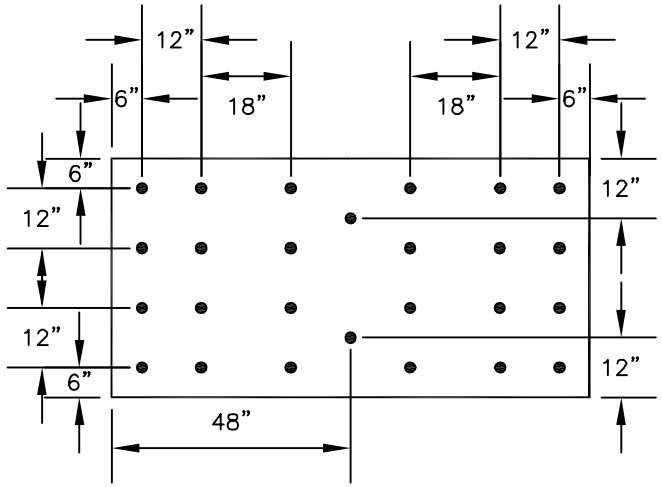

PERIMETER (26)
1 FASTENER PER EVERY 1.23 SQ. FT.

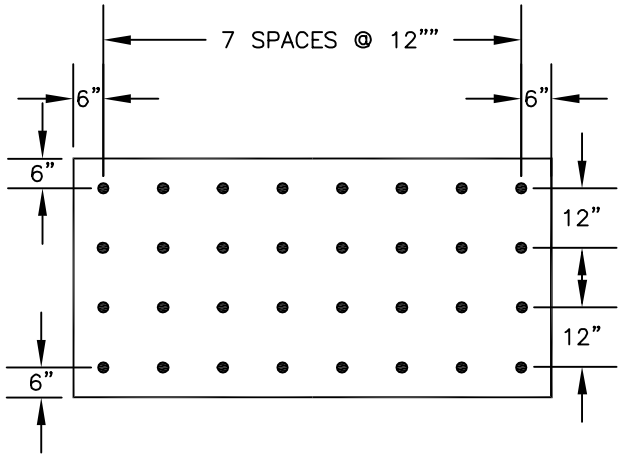

CORNERS (32)
1 FASTENER PER EVERY 1 SQ. FT.

MULE-HIDE PRODUCTS CO., INC.	**INSULATION ATTACHMENT** **17 FASTENERS PER 4' X 8' IN FIELD** **SYSTEMS:** **FULLY ADHERED**	**DETAIL NO.:** **MHT-FA-723** REVISION DATE: 01/2013

®

NOTES:

1. THESE FASTENING PATTERNS ARE TO BE USED WHEN THE PROJECT REQUIRES A FACTORY MUTUAL RATED SYSTEM. CONTACT MULE-HIDE TECHNICAL DEPARTMENT FOR APPROPRIATE USE OF THESE PATTERNS.

2. MULE-HIDE INSULATION FASTENERS AND 3" DIAMETER PLATES MUST BE USED FOR INSULATION ATTACHMENT.

3. REFER TO MULE-HIDE WIND UPLIFT RATINGS FOR APPROPRIATE FASTENER DENSITY REQUIRED.

4. FASTENER DENSITY INCREASES BASED ON THE FOLLOWING:
   - 50% FOR PERIMETERS WITH A MINIMUM OF 1 FASTENER EVERY 2 SQUARE FEET NOT TO EXCEED 1 FASTENER EVERY 1 SQUARE FEET
   - CONSTANT DENSITY OF 1 FASTENER EVERY 1 SQUARE FEET FOR CORNERS.

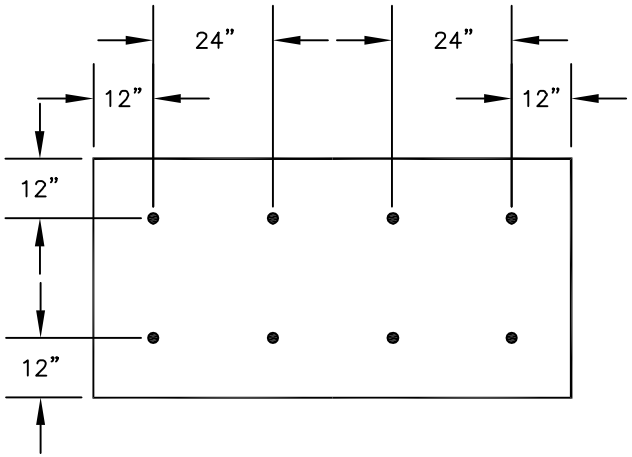

FIELD (8)
1 FASTENER PER EVERY 4 SQ. FT.

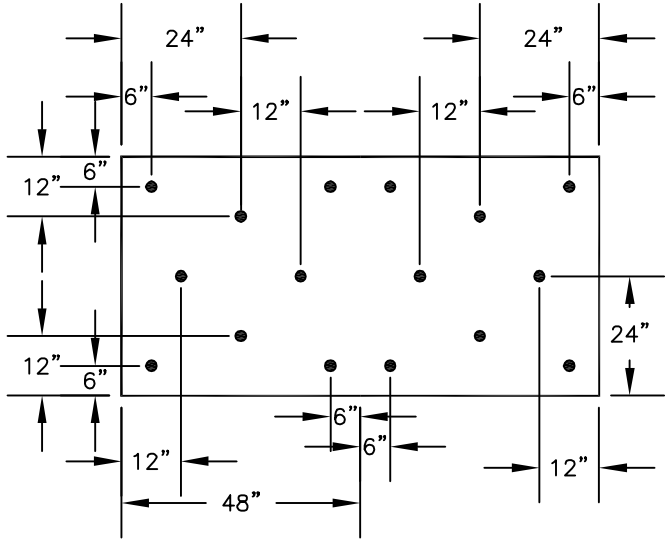

PERIMETER (16)
1 FASTENER PER EVERY 2 SQ. FT.

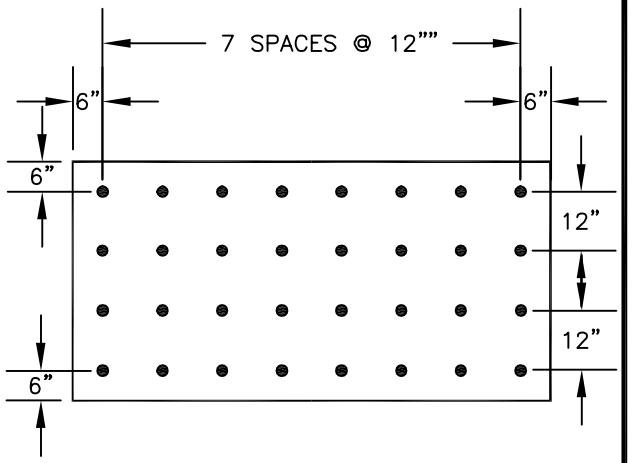

CORNERS (32)
1 FASTENER PER EVERY 1 SQ. FT.

MULE-HIDE PRODUCTS CO., INC.	**FM - 8 FIELD FASTENERS PER 4' X 8' BOARD PATTERN LAYOUT** **SYSTEMS:** **FULLY ADHERED**	**DETAIL NO.:** **MHT-FM-724** REVISION DATE: 01/2013

®

NOTES:

1. THESE FASTENING PATTERNS ARE TO BE USED WHEN THE PROJECT REQUIRES A FACTORY MUTUAL RATED SYSTEM. CONTACT MULE-HIDE TECHNICAL DEPARTMENT FOR APPROPRIATE USE OF THESE PATTERNS.

2. MULE-HIDE INSULATION FASTENERS AND 3" DIAMETER PLATES MUST BE USED FOR INSULATION ATTACHMENT.

3. REFER TO MULE-HIDE WIND UPLIFT RATINGS FOR APPROPRIATE FASTENER DENSITY REQUIRED.

4. FASTENER DENSITY INCREASES BASED ON THE FOLLOWING:
   - 50% FOR PERIMETERS WITH A MINIMUM OF 1 FASTENER EVERY 2 SQUARE FEET NOT TO EXCEED 1 FASTENER EVERY 1 SQUARE FEET
   - CONSTANT DENSITY OF 1 FASTENER EVERY 1 SQUARE FEET FOR CORNERS.

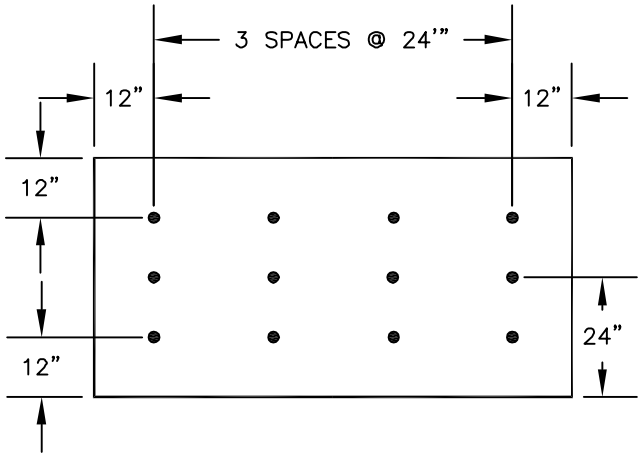

FIELD (12)
1 FASTENER PER EVERY 2.66 SQ. FT.

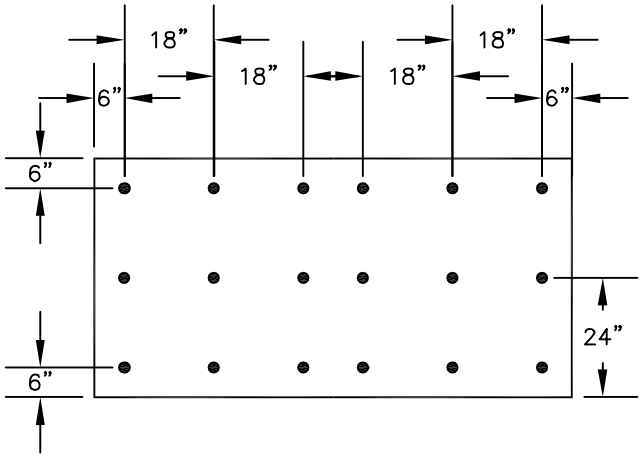

PERIMETER (18)
1 FASTENER PER EVERY 1.77 SQ. FT.

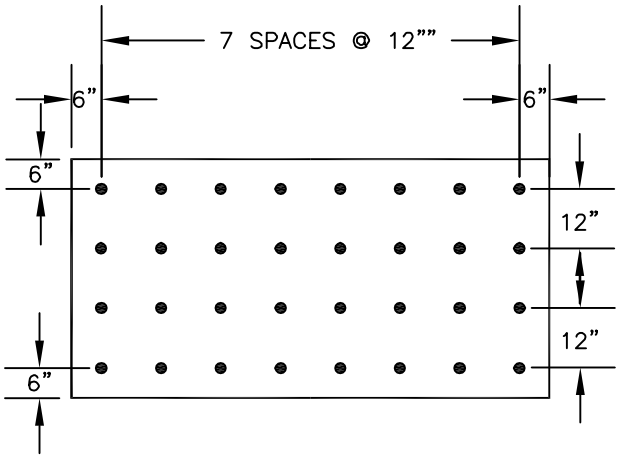

CORNERS (32)
1 FASTENER PER EVERY 1 SQ. FT.

MULE-HIDE PRODUCTS CO., INC.	**FM - 12 FIELD FASTENERS PER 4' X 8' BOARD PATTERN LAYOUT** **SYSTEMS:** **FULLY ADHERED**	**DETAIL NO.:** **MHT-FM-725** REVISION DATE: 01/2013

®

NOTES:

1. THESE FASTENING PATTERNS ARE TO BE USED WHEN THE PROJECT REQUIRES A FACTORY MUTUAL RATED SYSTEM. CONTACT MULE-HIDE TECHNICAL DEPARTMENT FOR APPROPRIATE USE OF THESE PATTERNS.

2. MULE-HIDE INSULATION FASTENERS AND 3" DIAMETER PLATES MUST BE USED FOR INSULATION ATTACHMENT.

3. REFER TO MULE-HIDE WIND UPLIFT RATINGS FOR APPROPRIATE FASTENER DENSITY REQUIRED.

4. FASTENER DENSITY INCREASES BASED ON THE FOLLOWING:
   - 50% FOR PERIMETERS WITH A MINIMUM OF 1 FASTENER EVERY 2 SQUARE FEET NOT TO EXCEED 1 FASTENER EVERY 1 SQUARE FEET
   - CONSTANT DENSITY OF 1 FASTENER EVERY 1 SQUARE FEET FOR CORNERS.

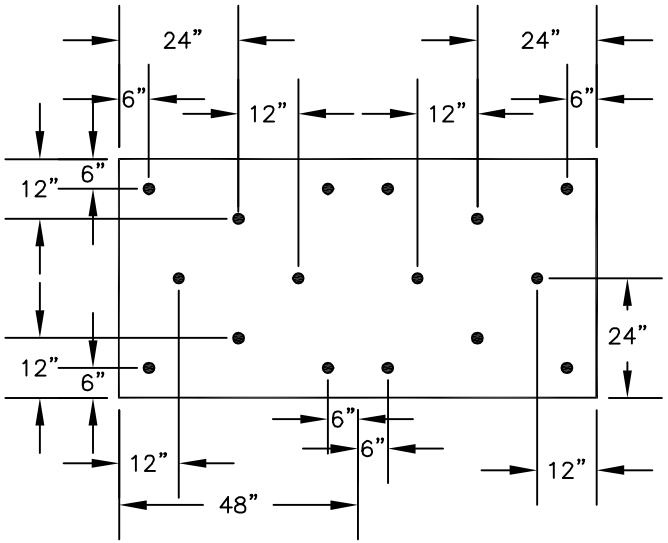

FIELD (16)
1 FASTENER PER EVERY 2 SQ. FT.

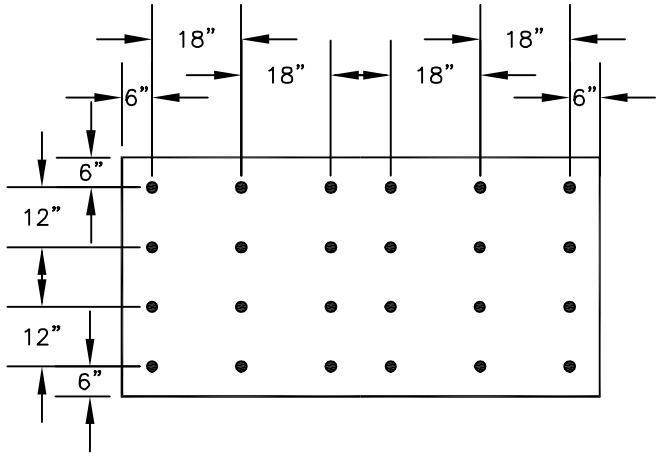

PERIMETER (24)
1 FASTENER PER EVERY 1.33 SQ. FT.

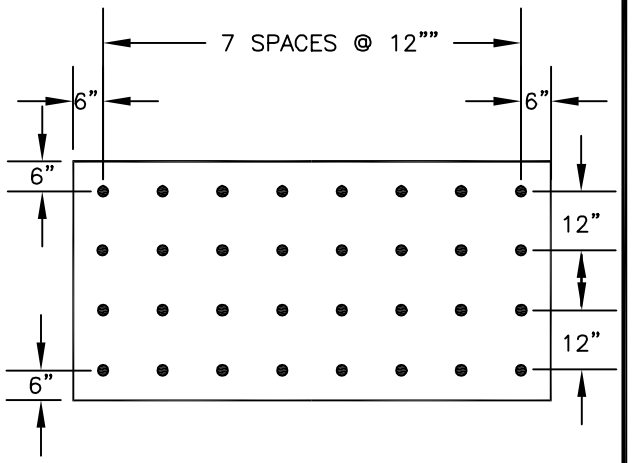

CORNERS (32)
1 FASTENER PER EVERY 1 SQ. FT.

MULE-HIDE PRODUCTS CO., INC.	**FM - 16 FIELD FASTENERS PER 4' X 8' BOARD PATTERN LAYOUT** **SYSTEMS:** **FULLY ADHERED**	**DETAIL NO.:** **MHT-FM-726** REVISION DATE: 01/2013

®

NOTES:

1. THESE FASTENING PATTERNS ARE TO BE USED WHEN THE PROJECT REQUIRES A FACTORY MUTUAL RATED SYSTEM. CONTACT MULE–HIDE TECHNICAL DEPARTMENT FOR APPROPRIATE USE OF THESE PATTERNS.

2. MULE–HIDE INSULATION FASTENERS AND 3" DIAMETER PLATES MUST BE USED FOR INSULATION ATTACHMENT.

3. REFER TO MULE–HIDE WIND UPLIFT RATINGS FOR APPROPRIATE FASTENER DENSITY REQUIRED.

4. FASTENER DENSITY INCREASES BASED ON THE FOLLOWING:
   - 50% FOR PERIMETERS WITH A MINIMUM OF 1 FASTENER EVERY 2 SQUARE FEET NOT TO EXCEED 1 FASTENER EVERY 1 SQUARE FEET
   - CONSTANT DENSITY OF 1 FASTENER EVERY 1 SQUARE FEET FOR CORNERS.

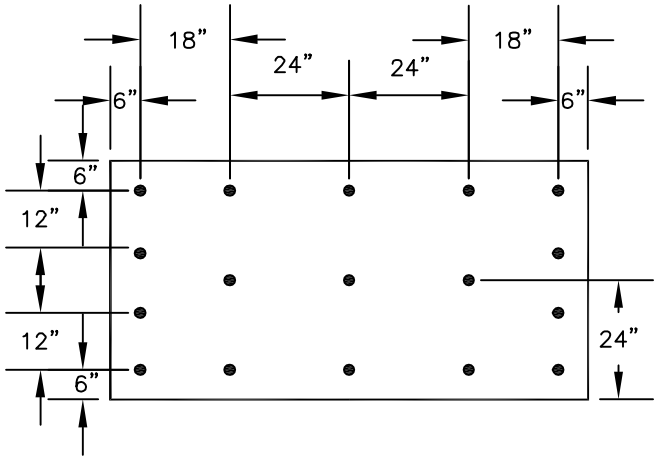

FIELD (17)
1 FASTENER PER EVERY 1.88 SQ. FT.

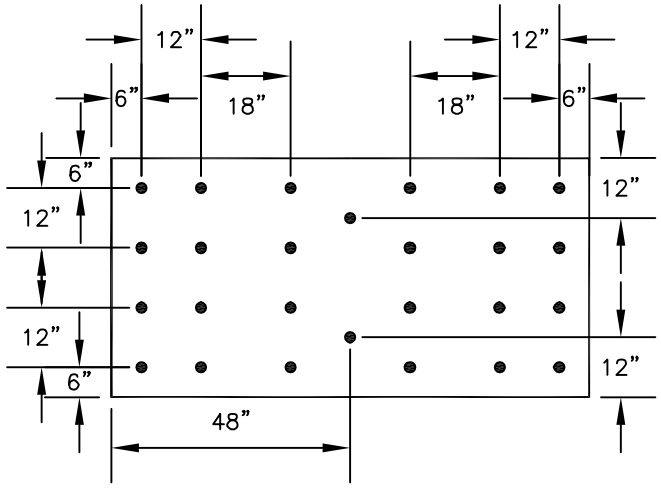

PERIMETER (26)
1 FASTENER PER EVERY 1.23 SQ. FT.

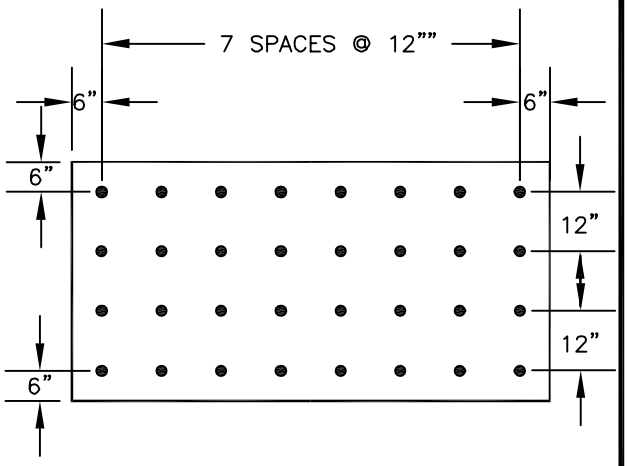

CORNERS (32)
1 FASTENER PER EVERY 1 SQ. FT.

MULE-HIDE PRODUCTS CO., INC.	**FM - 17 FIELD FASTENERS PER 4' X 8' BOARD PATTERN LAYOUT** **SYSTEMS:** **FULLY ADHERED**	**DETAIL NO.:** **MHT-FM-727** REVISION DATE: 01/2013

®

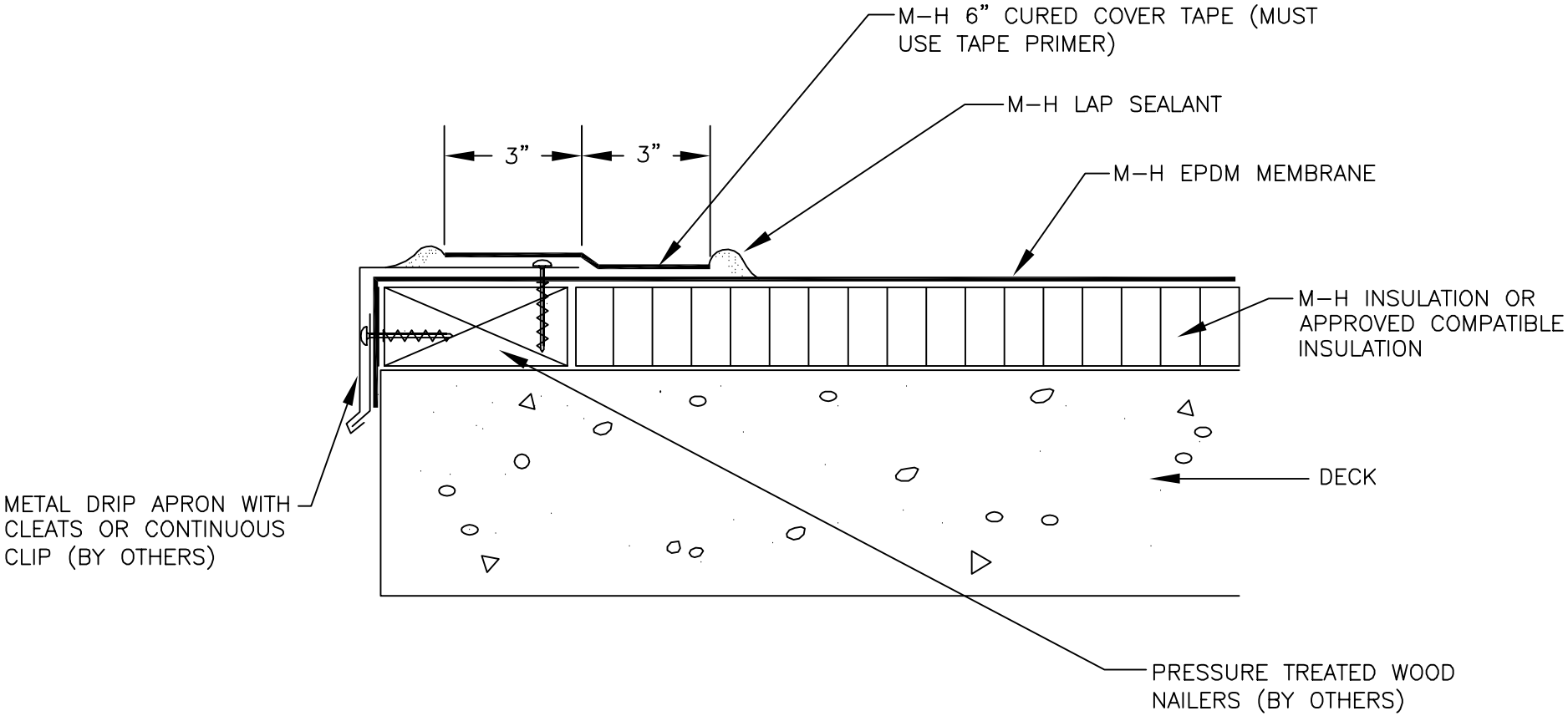

NOTE:

THIS DETAIL IS ACCEPTABLE FOR USE IN A 20–YEAR WARRANTED SYSTEM

MULE-HIDE PRODUCTS CO., INC. 12/01/2008	**DRIP APRON TERMINATION**	**DETAIL NO.:**
	SYSTEMS: ADHERED & MECHANICALLY ATTACHED	**MHE-101**

®

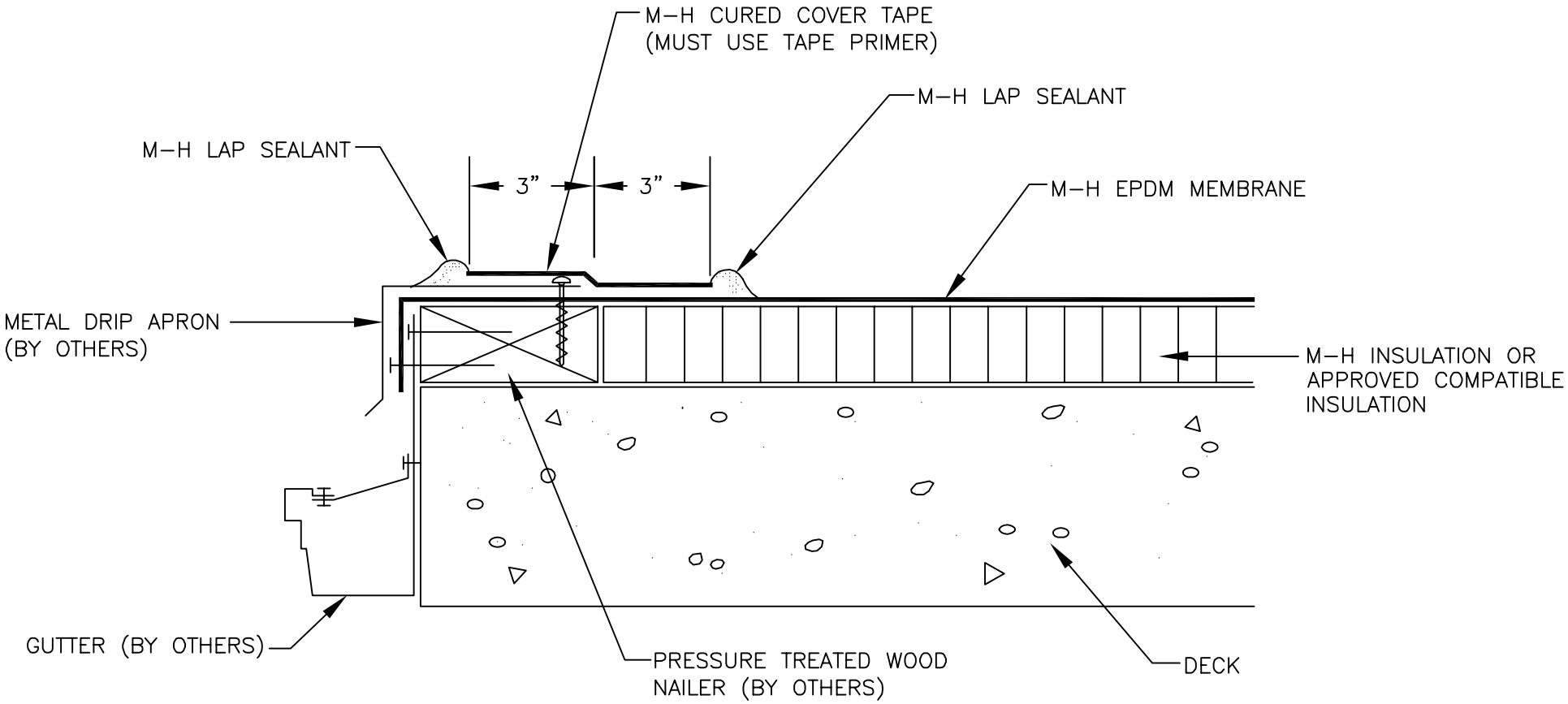

NOTE:

WOOD NAILERS ARE NOT REQUIRED TO BE PRESSURE TREATED ON NEW CONSTRUCTION

THIS DETAIL IS NOT APPROVED FOR USE IN A 20–YEAR WARRANTED SYSTEM

MULE-HIDE PRODUCTS CO., INC. 12/01/2008	**DRIP APRON/GUTTER TERMINATION**	**DETAIL NO.:**
	SYSTEMS: ADHERED & MECHANICALLY ATTACHED	**MHE-102**

®

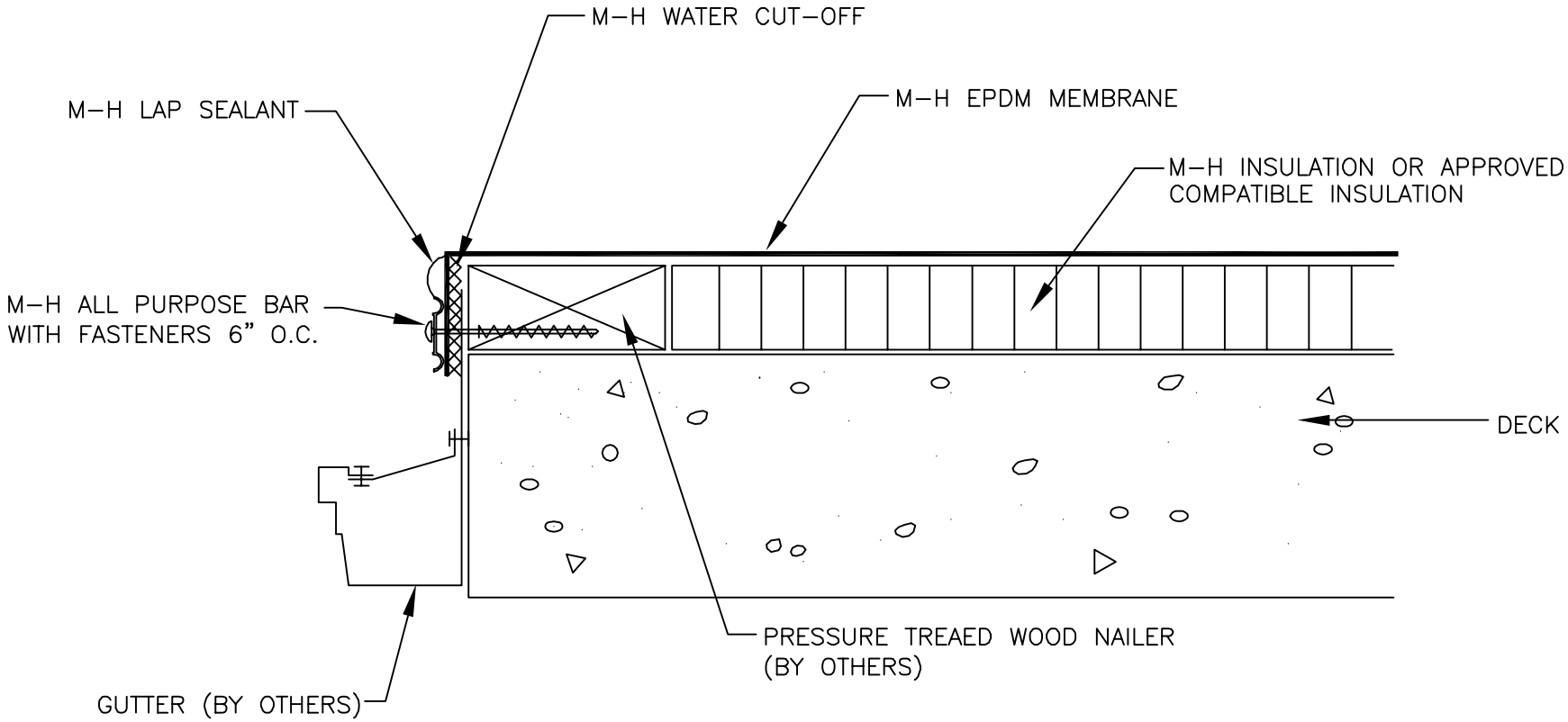

NOTE:

THIS DETAIL IS ACCEPTABLE FOR USE IN A 20–YEAR WARRANTED SYSTEM

MULE-HIDE PRODUCTS CO., INC. 12/01/2008	**ALL PURPOSE BAR TERMINATION**	**DETAIL NO.:**
	SYSTEMS: SDHERED & MECHANICALLY ATTACHED	**MHE-103**

®

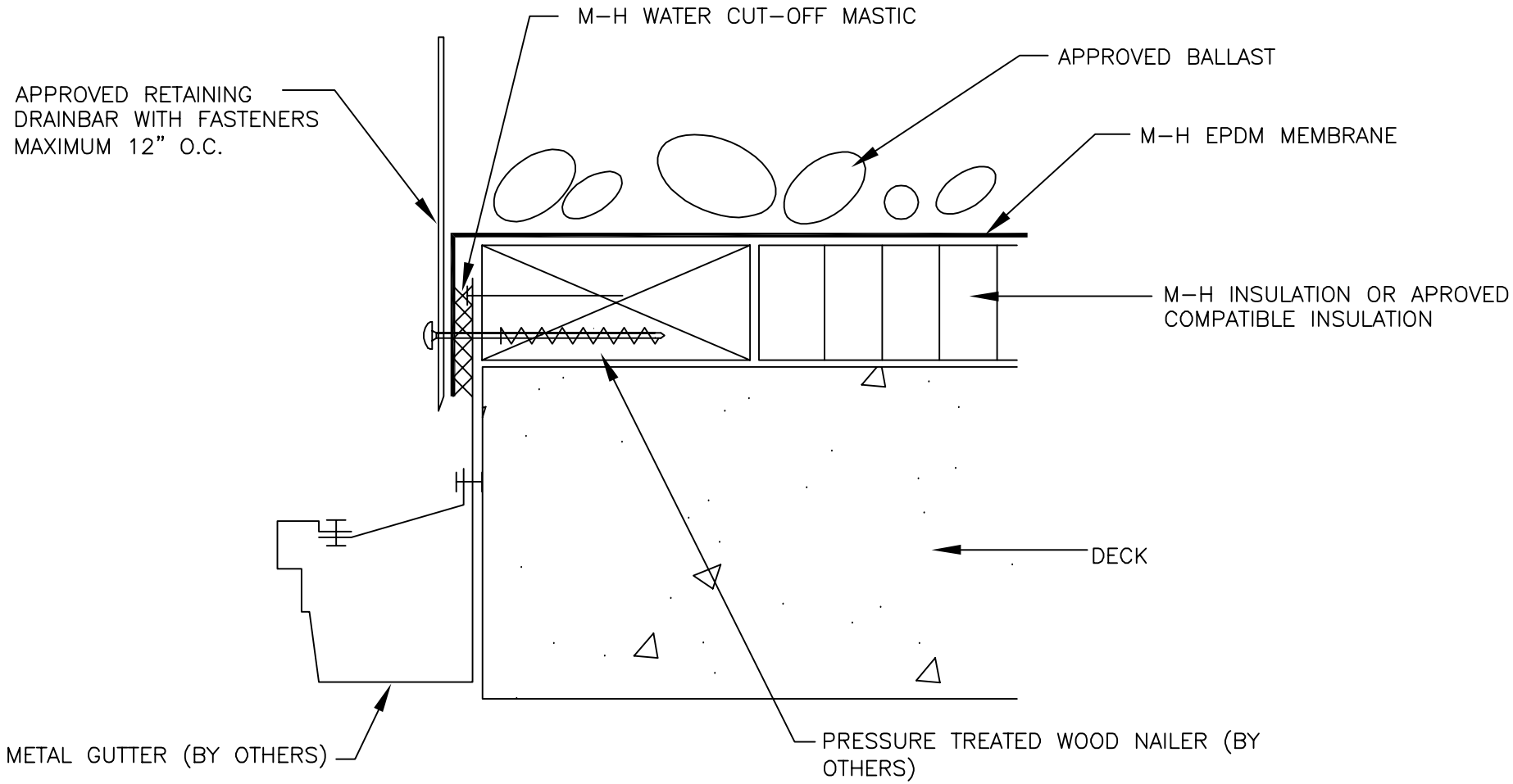

NOTE:

THIS DETAIL IS ACCEPTABLE FOR USE IN A 20–YEAR WARRANTED SYSTEM

MULE-HIDE PRODUCTS CO., INC. 12/01/2008	**BALLAST RETAINER BAR**	**DETAIL NO.:**
	SYSTEMS: BALLAST ONLY	**MHE-104**

®

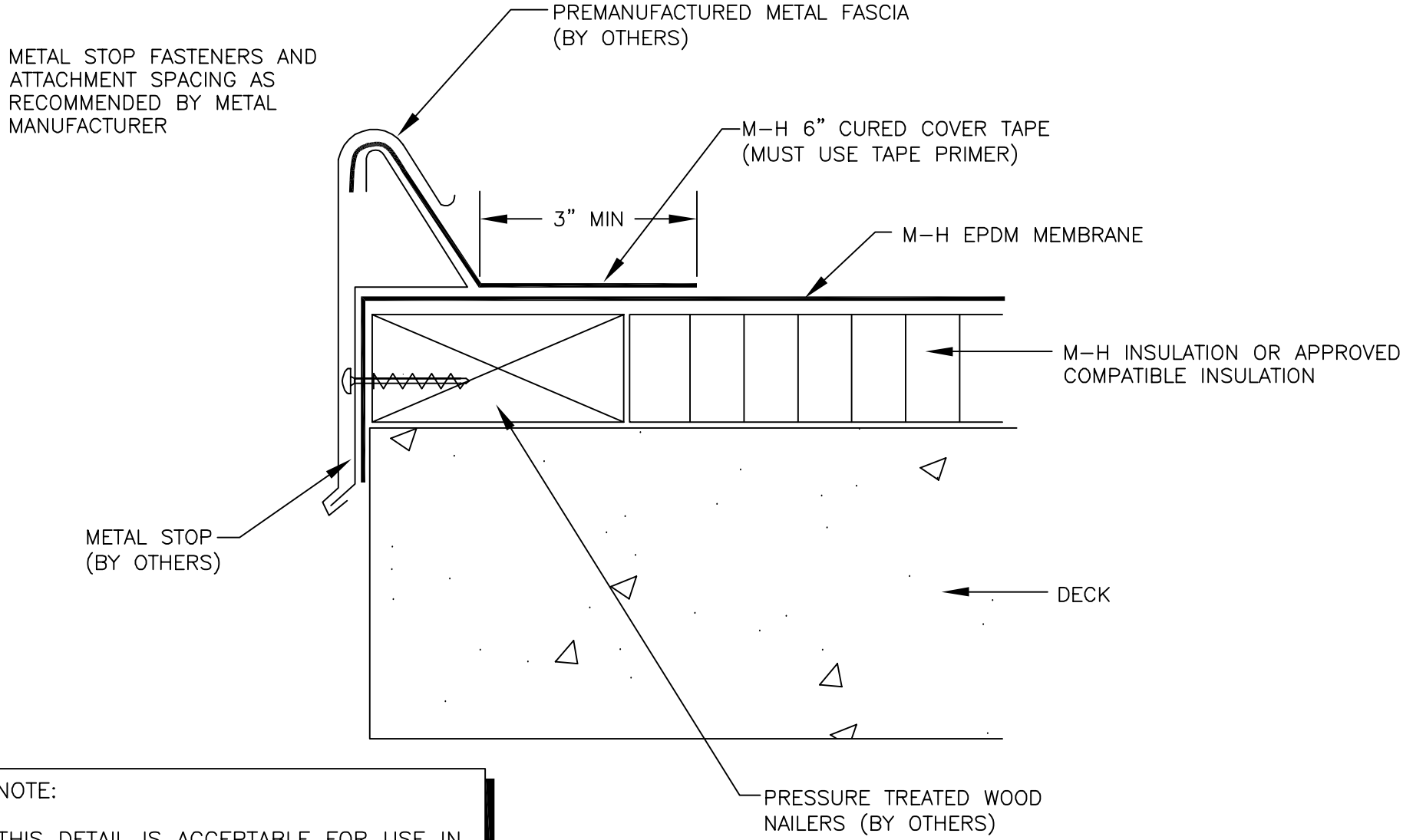

NOTE:

THIS DETAIL IS ACCEPTABLE FOR USE IN A 20–YEAR WARRANTED SYSTEM

MULE-HIDE PRODUCTS CO., INC. 12/01/2008	**GRAVEL STOP WITH SNAP LOCK FASCIA** **SYSTEMS: ALL**	**DETAIL NO.:** **MHE-105**

®

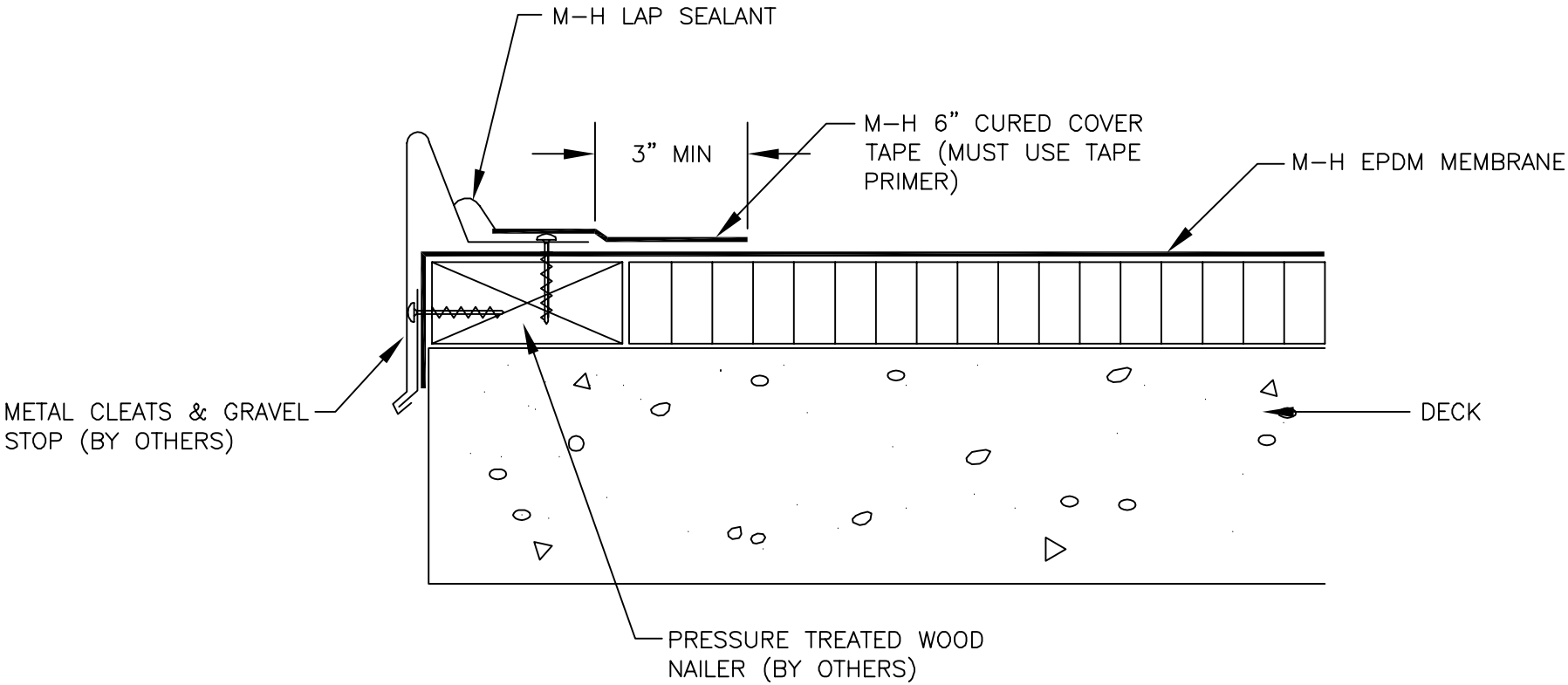

NOTE:

THIS DETAIL IS ACCEPTABLE FOR USE IN A 20–YEAR WARRANTED SYSTEM

MULE-HIDE PRODUCTS CO., INC. 12/01/2008	**GRAVEL STOP TERMINATION**	**DETAIL NO.:**
	SYSTEMS: ALL	**MHE-106**

®

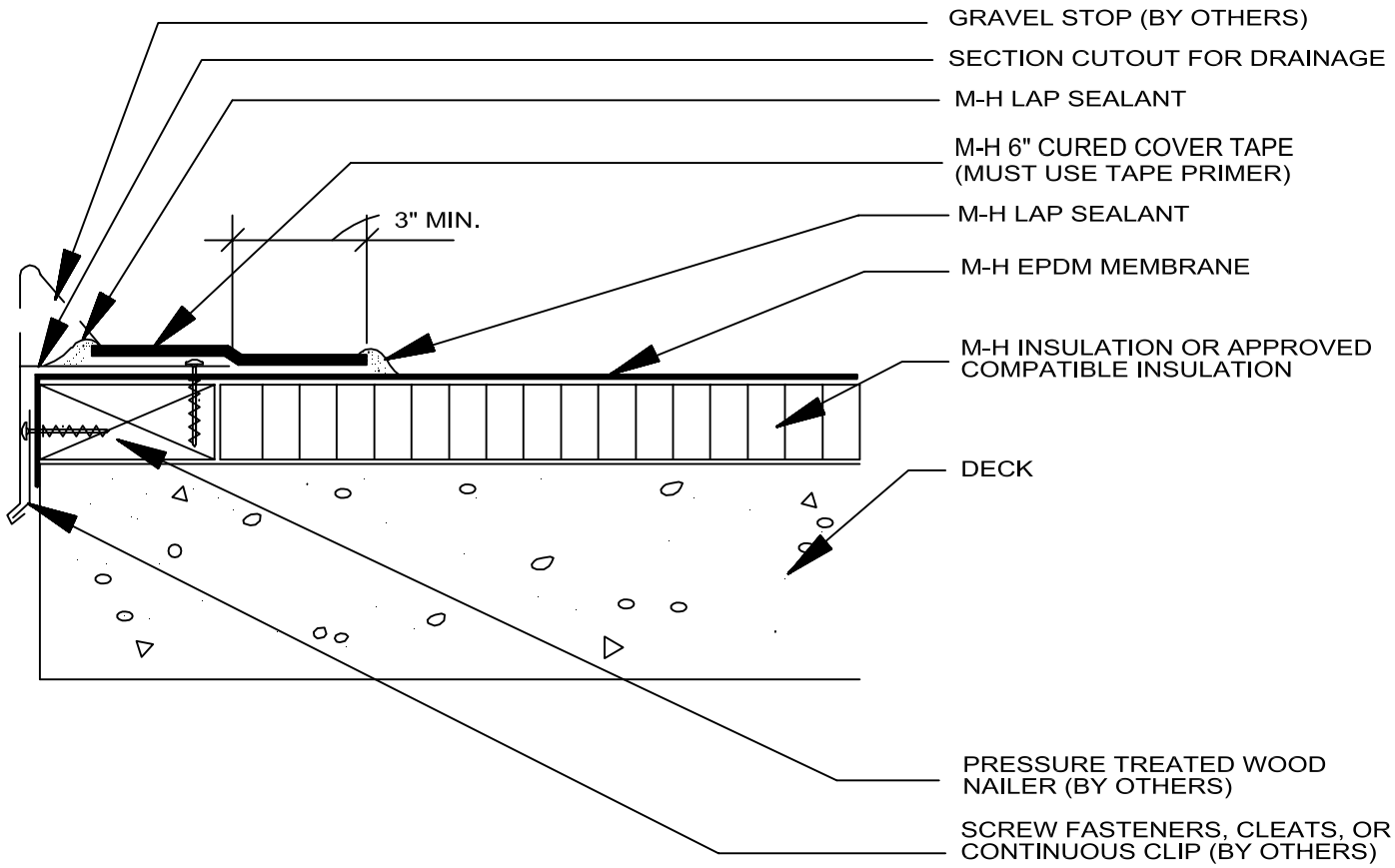

MULE-HIDE PRODUCTS CO., INC. **04/01/2004**	GRAVEL STOP WITH SCUPPER	DETAIL NO.:
	SYSTEMS: ALL	MHE-107

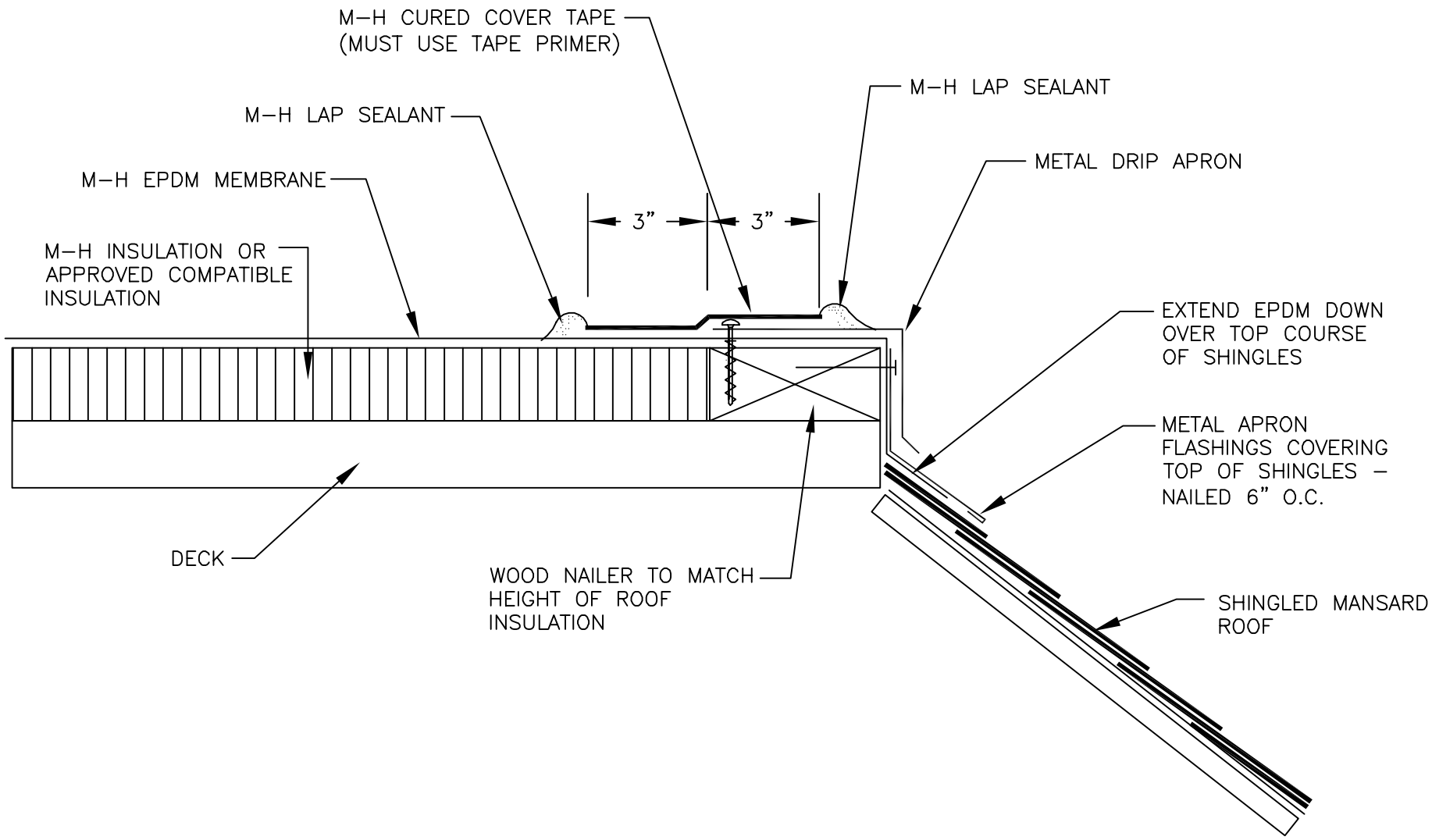

MULE-HIDE PRODUCTS CO., INC. **03/11/2011**	**DRIP EDGE AT MANSARD** **SYSTEMS:** **FULLY ADHERED**	**DETAIL NO.:** **MHE-108**

®

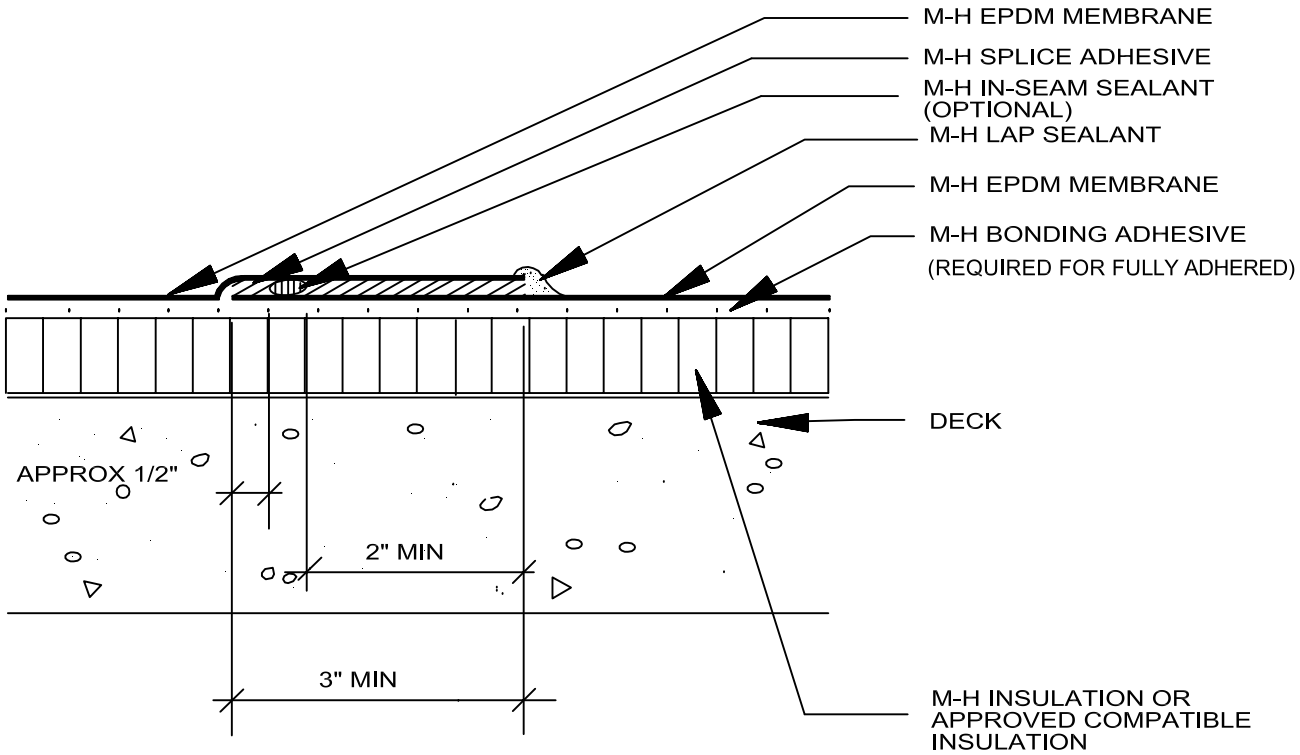

NOTE: MULE HIDE SEAM CLEANER MUST BE USED PRIOR TO APPLICATION OF ADHESIVE AND LAP SEALANT. FOLLOW PROCEDURE IN MANUAL

MULE-HIDE PRODUCTS CO., INC. **04/01/2004**	MEMBRANE SPLICE WITH SPLICE ADHESIVE - 3" SEAM SYSTEMS: ALL	DETAIL NO.: MHE-110

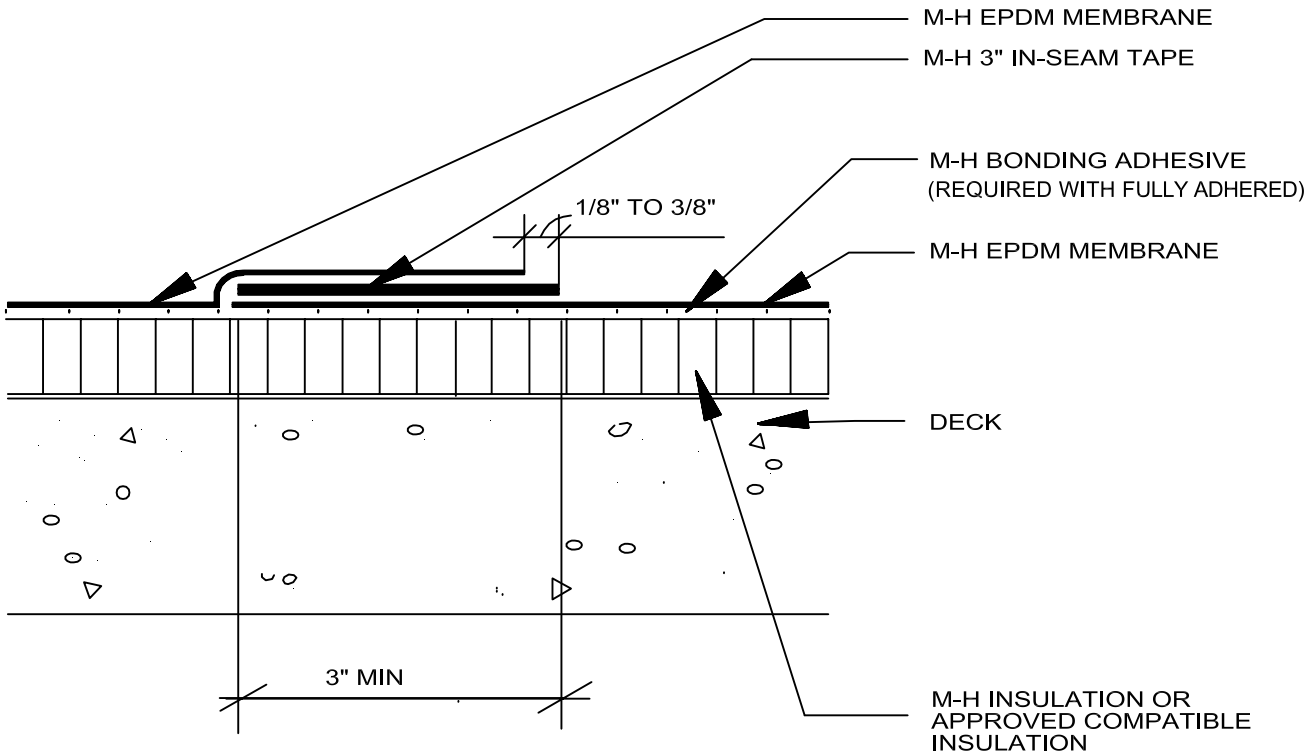

NOTE: MULE HIDE TAPE PRIMER MUST BE USED PRIOR TO APPLICATION OF IN-SEAM TAPE. FOLLOW PROCEDURE IN MANUAL.

MULE-HIDE PRODUCTS CO., INC. **04/01/2004**	MEMBRANE SPLICE W/ 3" IN-SEAM TAPE	DETAIL NO.:
	SYSTEMS: ALL	MHE-111

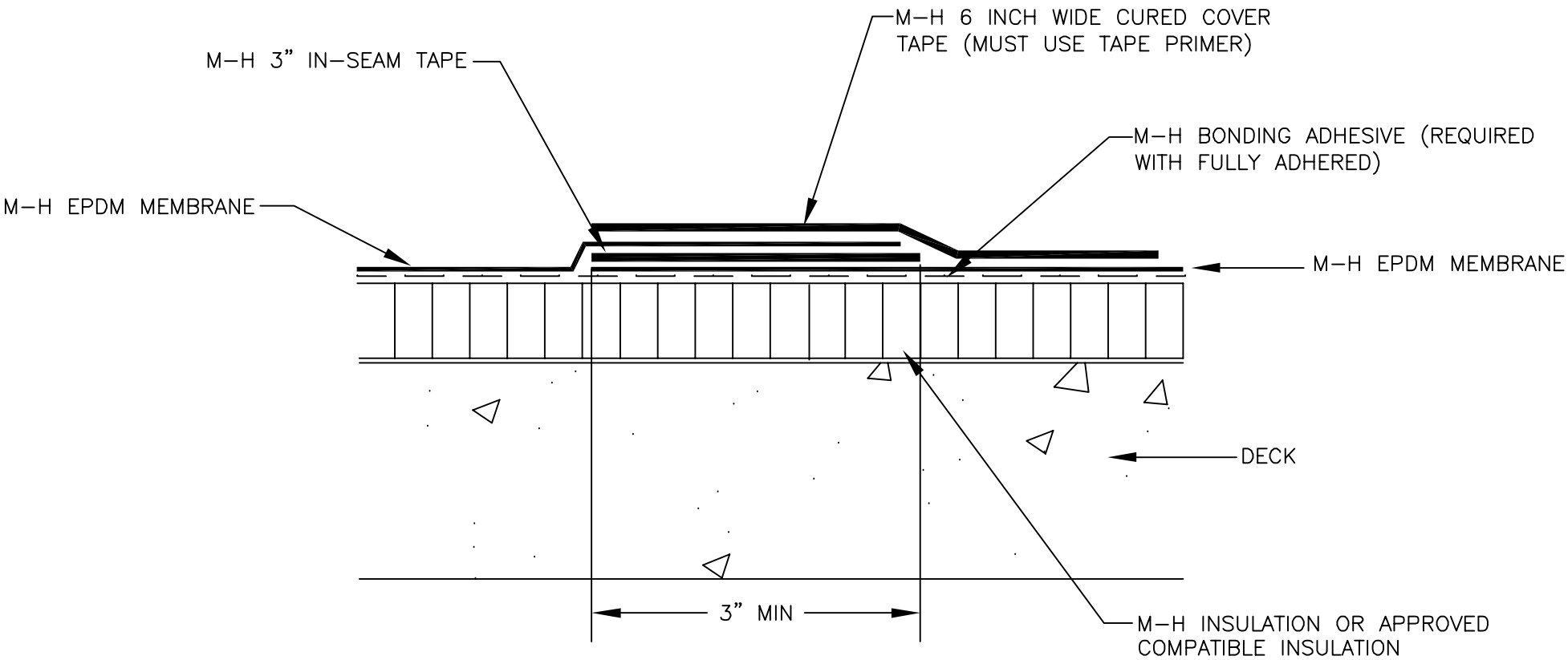

NOTE:

MULE–HIDE TAPE PRIMER MUST BE USED PRIOR TO APPLIACTION OF IN–SEAM TAPE. FOLLOW PROCEDURE IN MANUAL.

THIS DETAIL IS ACCEPTABLE FOR USE IN A 20–YEAR WARRANTED SYSTEM IN BALLASTED OR FULLY AHDERED SYSTEMS.

MULE-HIDE PRODUCTS CO., INC. 12/01/2008	**MEMBRANE SPLICE W/3" IN-SEAM TAPE**	**DETAIL NO.:**
	SYSTEMS: BALLASTED, FULLY ADHERED LIVING ROOF	**MHE-111A**

®

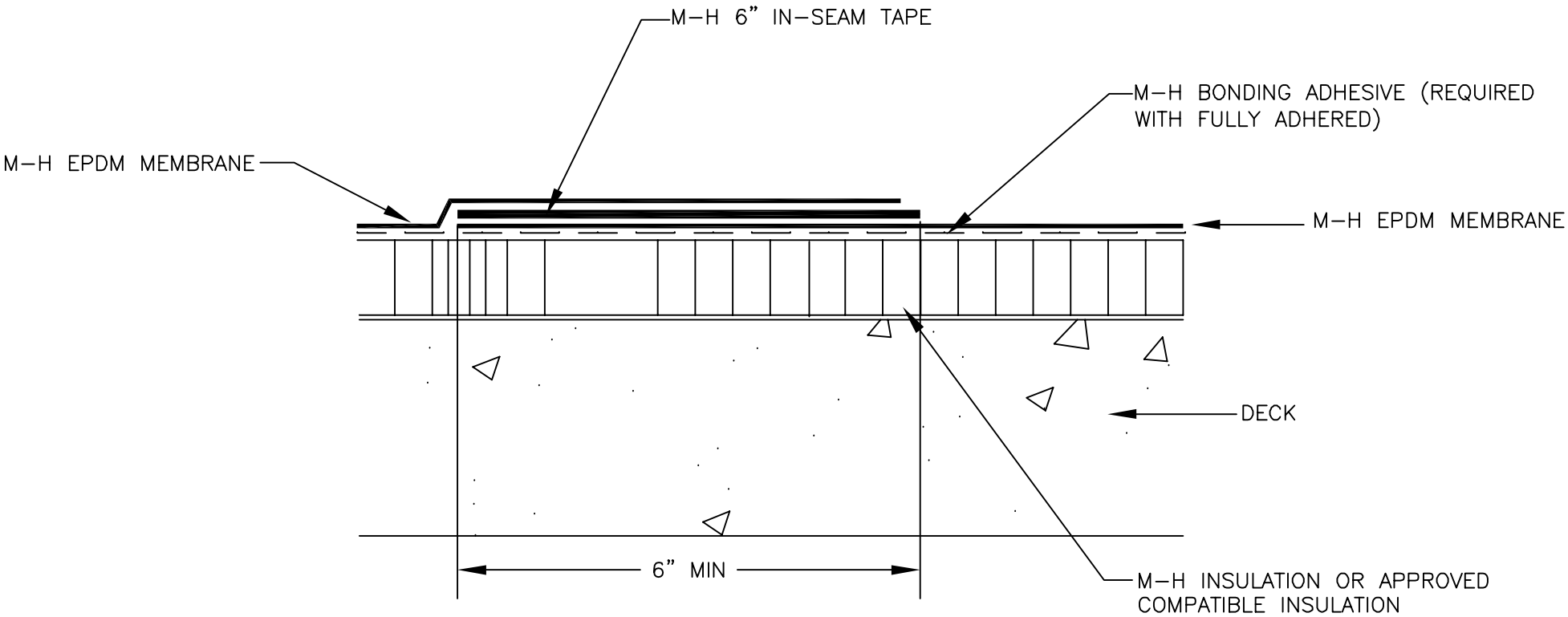

NOTE:

MULE–HIDE TAPE PRIMER MUST BE USED PRIOR TO APPLIACTION OF IN–SEAM TAPE. FOLLOW PROCEDURE IN MANUAL.

THIS DETAIL IS ACCEPTABLE FOR USE IN A 20–YEAR WARRANTED SYSTEM.

MULE-HIDE PRODUCTS CO., INC. 12/01/2008	**MEMBRANE SPLICE W/6" IN-SEAM TAPE**	**DETAIL NO.:**
	SYSTEMS: ALL	**MHE-111B**

®

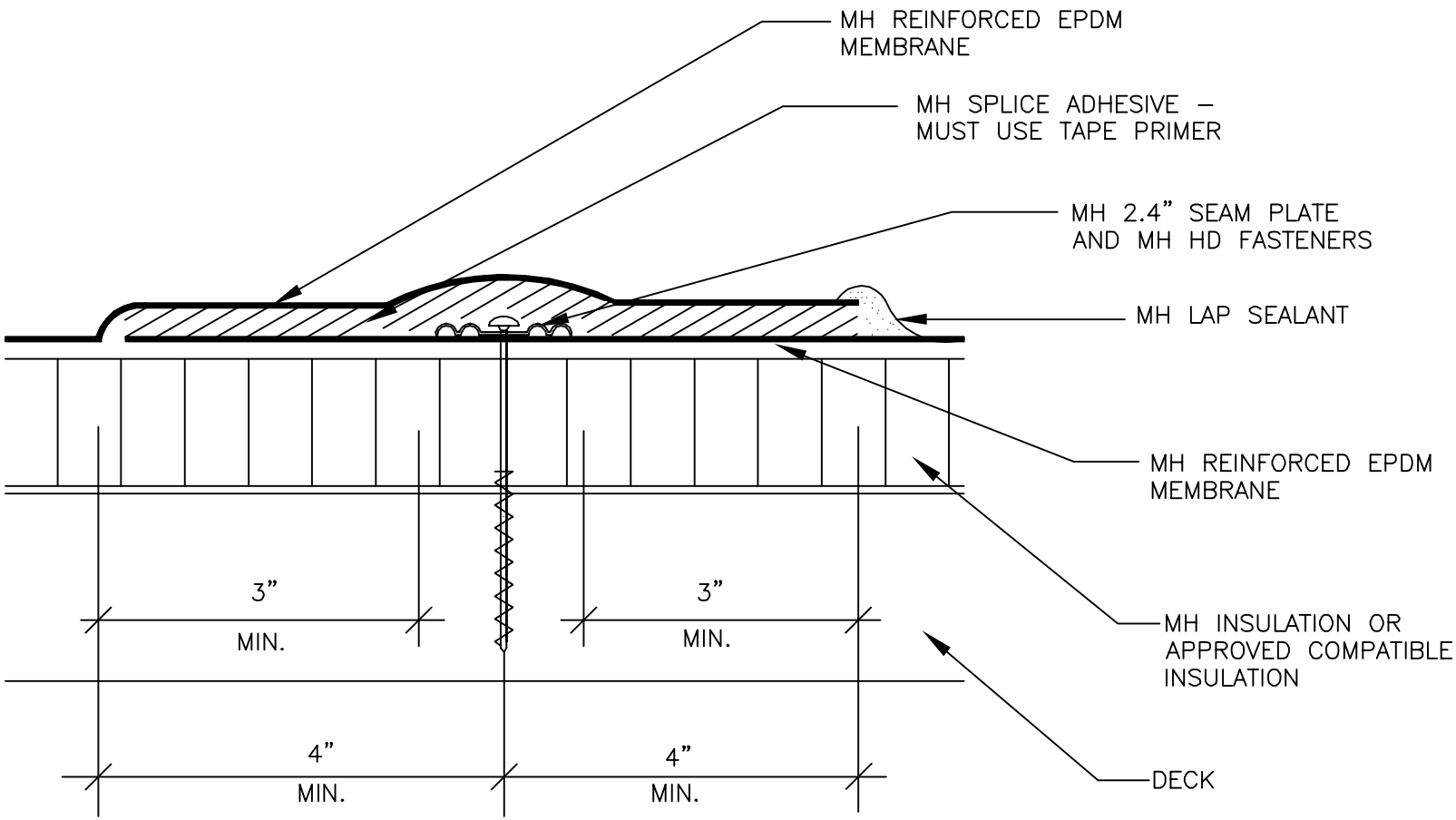

NOTE:

MULE–HIDE TAPE PRIMER MUST BE USED PRIOR TO APPLICATION OF SPLICE ADHESIVE. FOLLOW PROCEDURE IN MANUAL.

THIS DETAIL IS NOT ACCEPTABLE FOR A 15 OR 20 YEAR WARRANTY.

MULE-HIDE PRODUCTS CO., INC. 2010	***MEMBRANE SPLICE W/2.4" SEAM PLATE 8" SEAM***	***DETAIL NO.:***
	SYSTEMS: MECHANICALLY ATTACHED REINFORCED EPDM	***MHE-112***

®

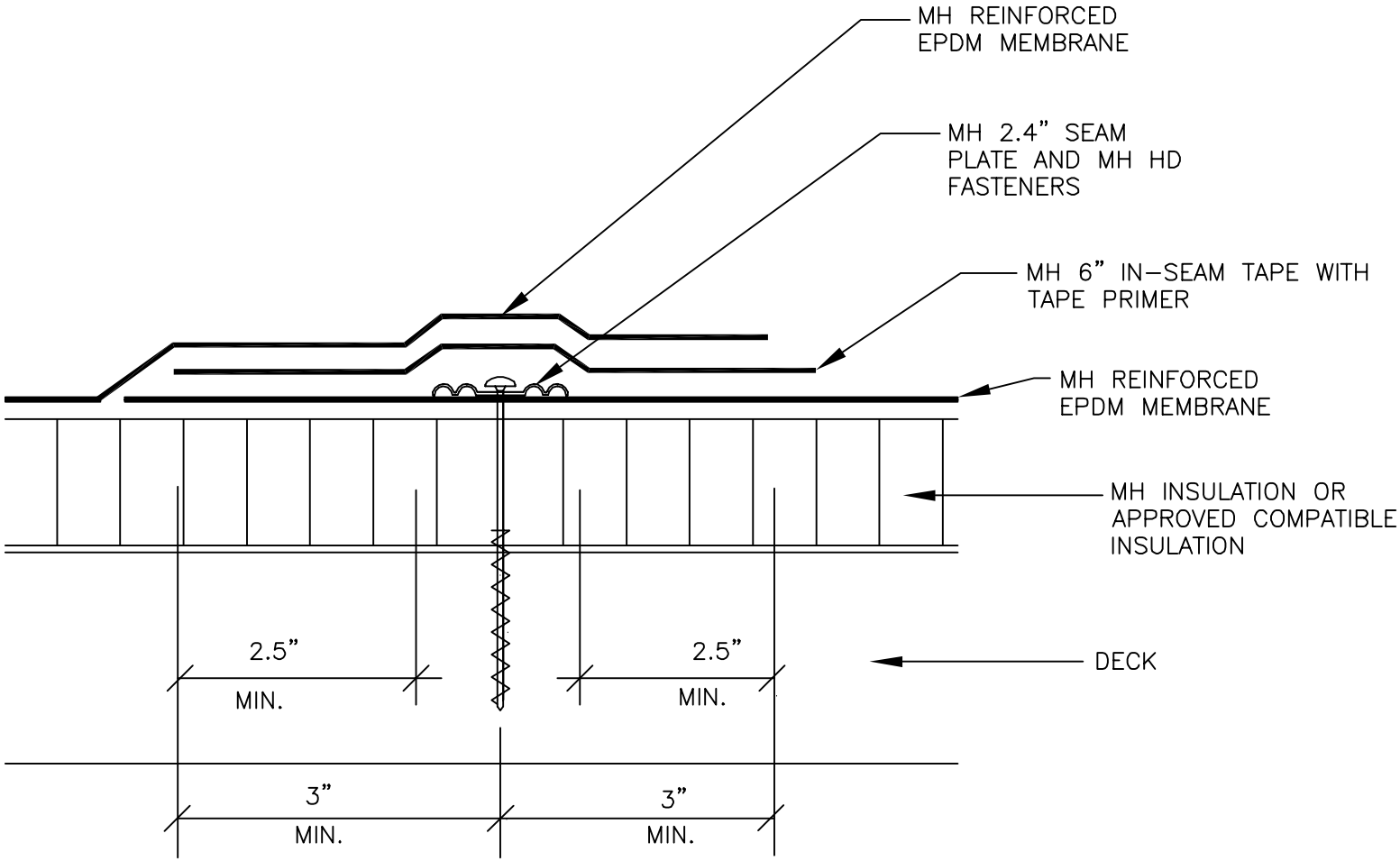

NOTE:

MULE-HIDE TAPE PRIMER MUST BE USED PRIOR TO APPLICATION OF IN-SEAM TAPE. FOLLOW PROCEDURE IN MANUAL.

THIS DETAIL IS ACCEPTABLE FOR USE IN A 20-YEAR WARRANTED SYSTEM.

MULE-HIDE PRODUCTS CO., INC. 2010	***MEMBRANE SPLICE W/6" TAPE AND 2.4" SEAM PLATE - 6" WIDE SEAM***	***DETAIL NO.:***
	SYSTEMS: MECHANICALLY ATTACHED REINFORCED EPDM	***MHE-112A***

®

FOR FM 1-135 COMPLIANCE THE MULE-HIDE HD FASTENERS MUST BE SPACED 12" ON CENTER

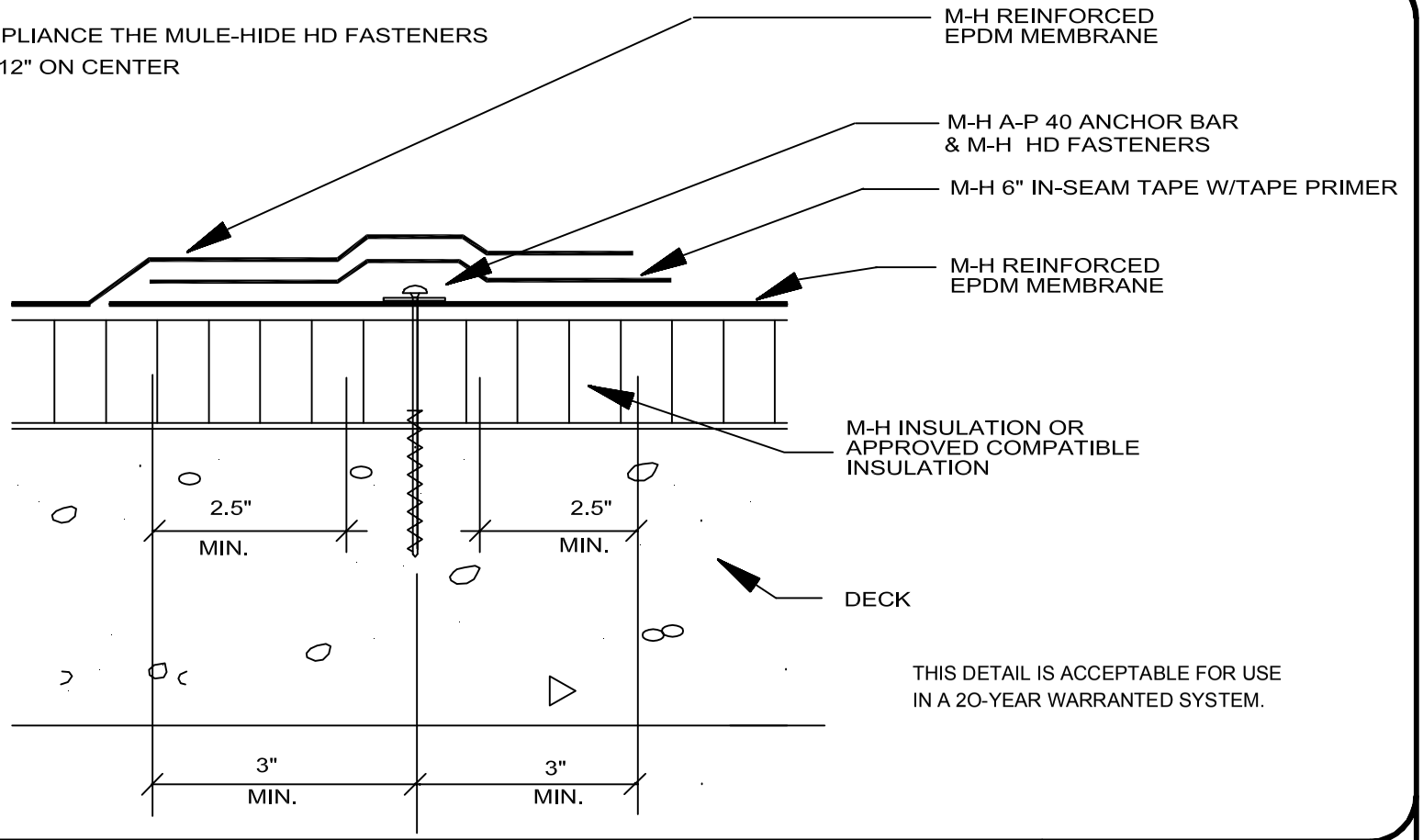

THIS DETAIL IS ACCEPTABLE FOR USE IN A 20-YEAR WARRANTED SYSTEM.

MULE-HIDE PRODUCTS CO., INC. 04/01/2004	MEMBRANE SPLICE W/ 6" TAPE A-P 40 ANCHOR BAR 6" WIDE SEAM SYSTEMS: MECHANICALLY ATTACHED REINFORCED MEMBRANE ONLY	DETAIL NO.: MHE-112B

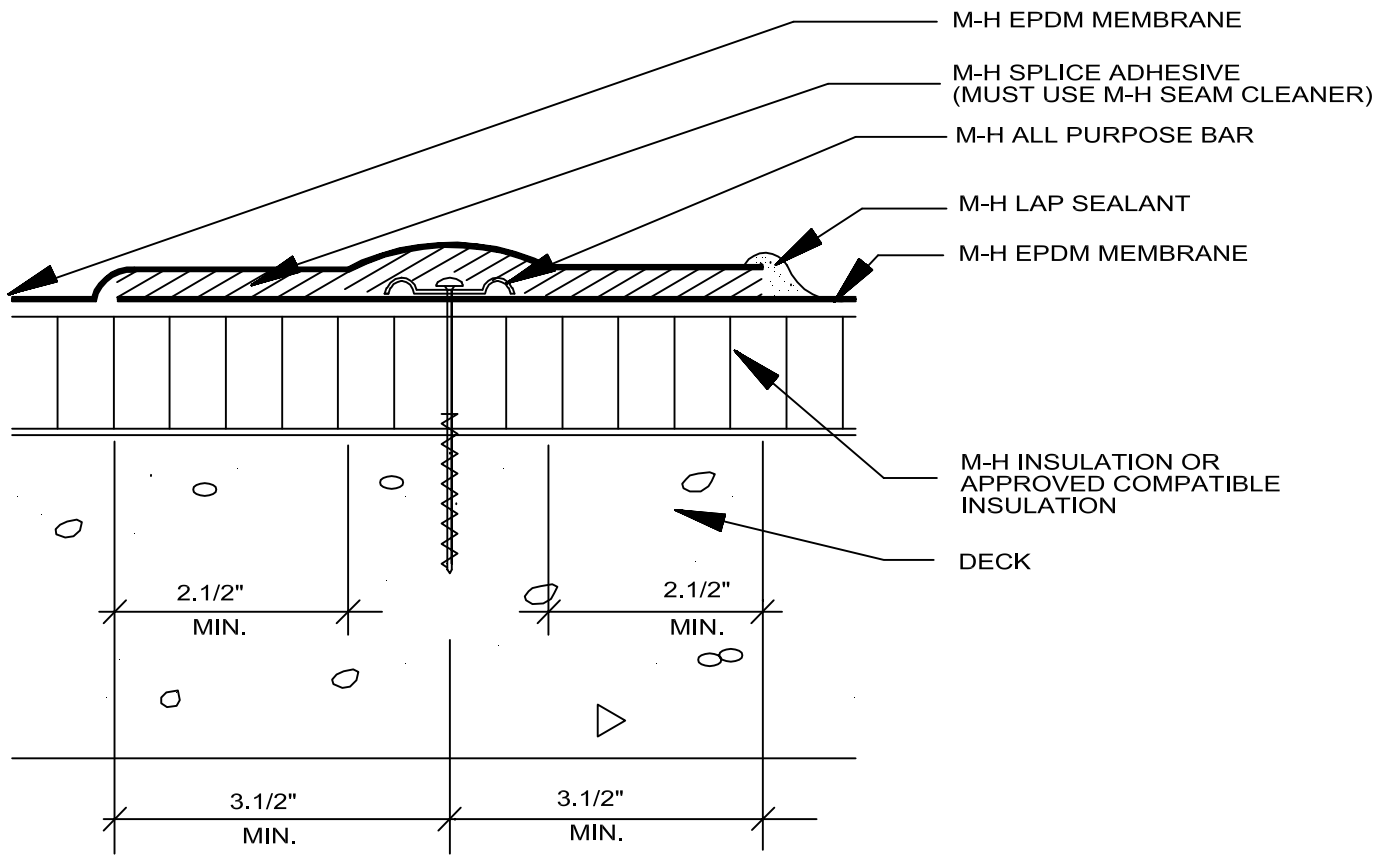

MULE-HIDE PRODUCTS CO., INC. **04/01/2004**	MEMBRANE SPLICE, ALL-PURPOSE BAR WITH ADHESIVE - 7" SEAM SYSTEMS: MECHANICALLY ATTACHED	DETAIL NO.: MHE-113

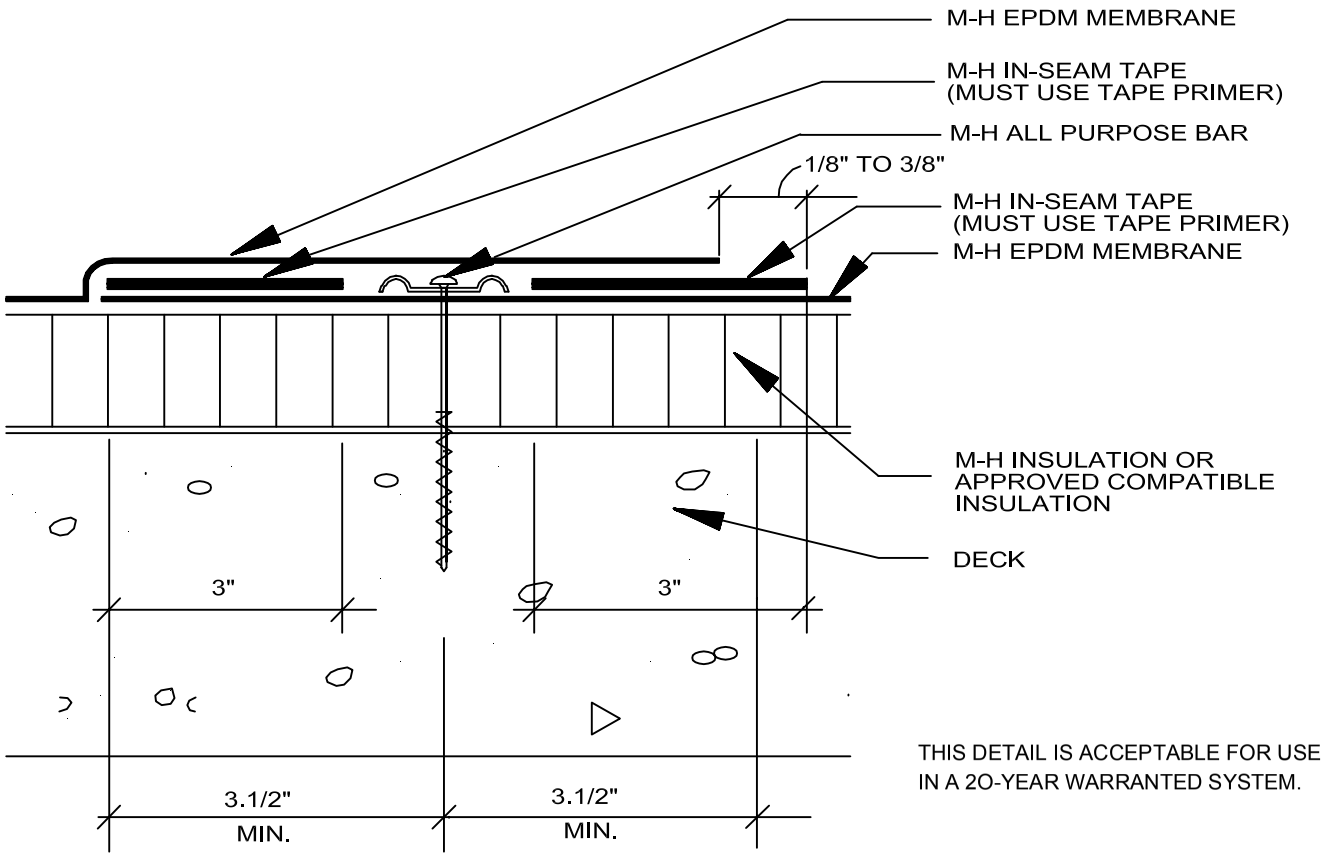

THIS DETAIL IS ACCEPTABLE FOR USE IN A 2O-YEAR WARRANTED SYSTEM.

MULE-HIDE PRODUCTS CO., INC. **04/01/2004**	MEMBRANE SPLICE, ALL-PURPOSE BAR WITH IN-SEAM TAPE - 7" SEAM SYSTEMS: MECHANICALLY ATTACHED	DETAIL NO.: MHE-114

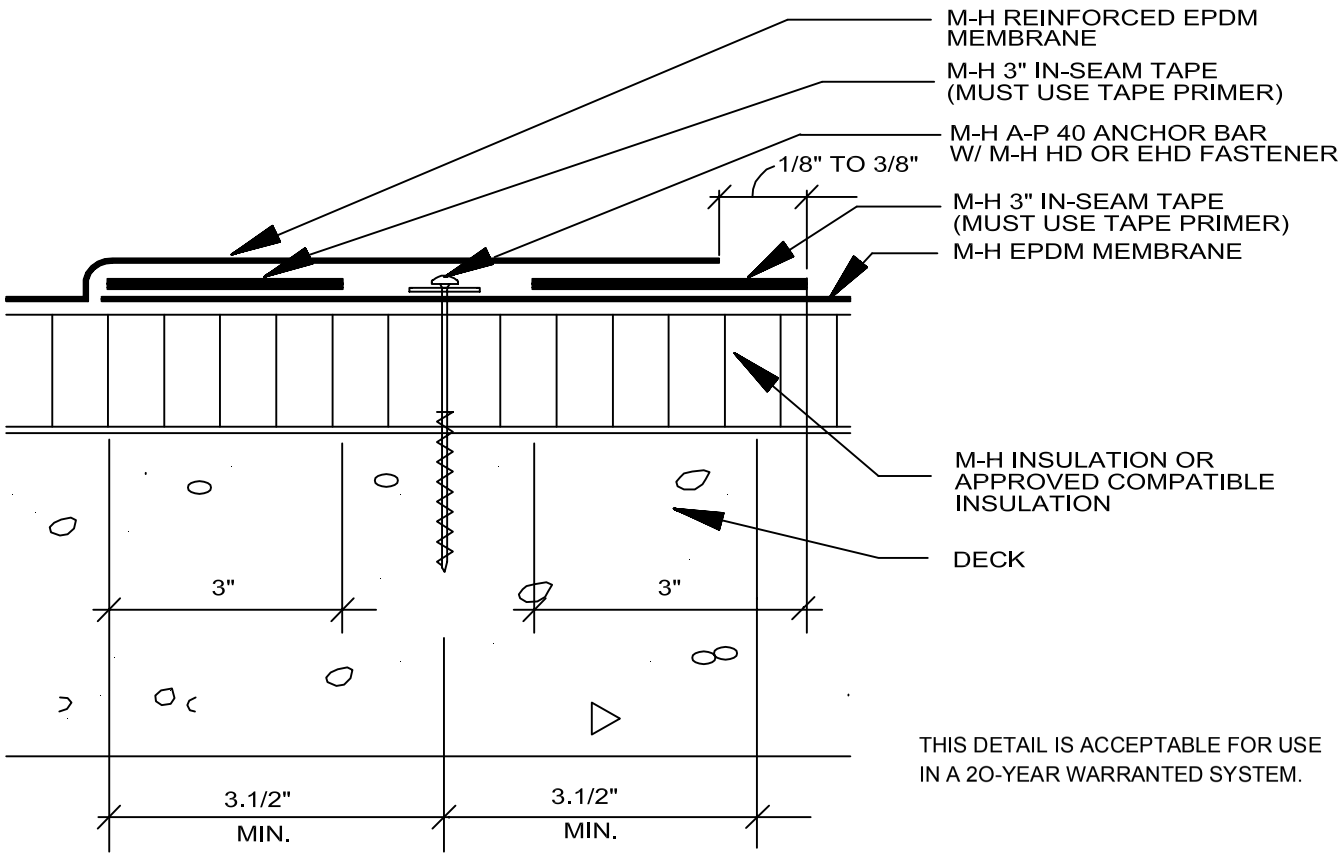

THIS DETAIL IS ACCEPTABLE FOR USE IN A 2O-YEAR WARRANTED SYSTEM.

MULE-HIDE PRODUCTS CO., INC. 04/01/2004	MEMBRANE SPLICE, A-P 40 ANCHOR BAR WITH IN-SEAM TAPE - 7" SEAM SYSTEMS: MECHANICALLY ATTACHED	DETAIL NO.: MHE-114a

NOTE: MUST USE SEAM CLEANER PRIOR TO APPLICATION OF SPLICE ADHESIVE - TAPE PRIMER MAY BE USED AS A SUBSTITUTE FOR SEAM CLEANER

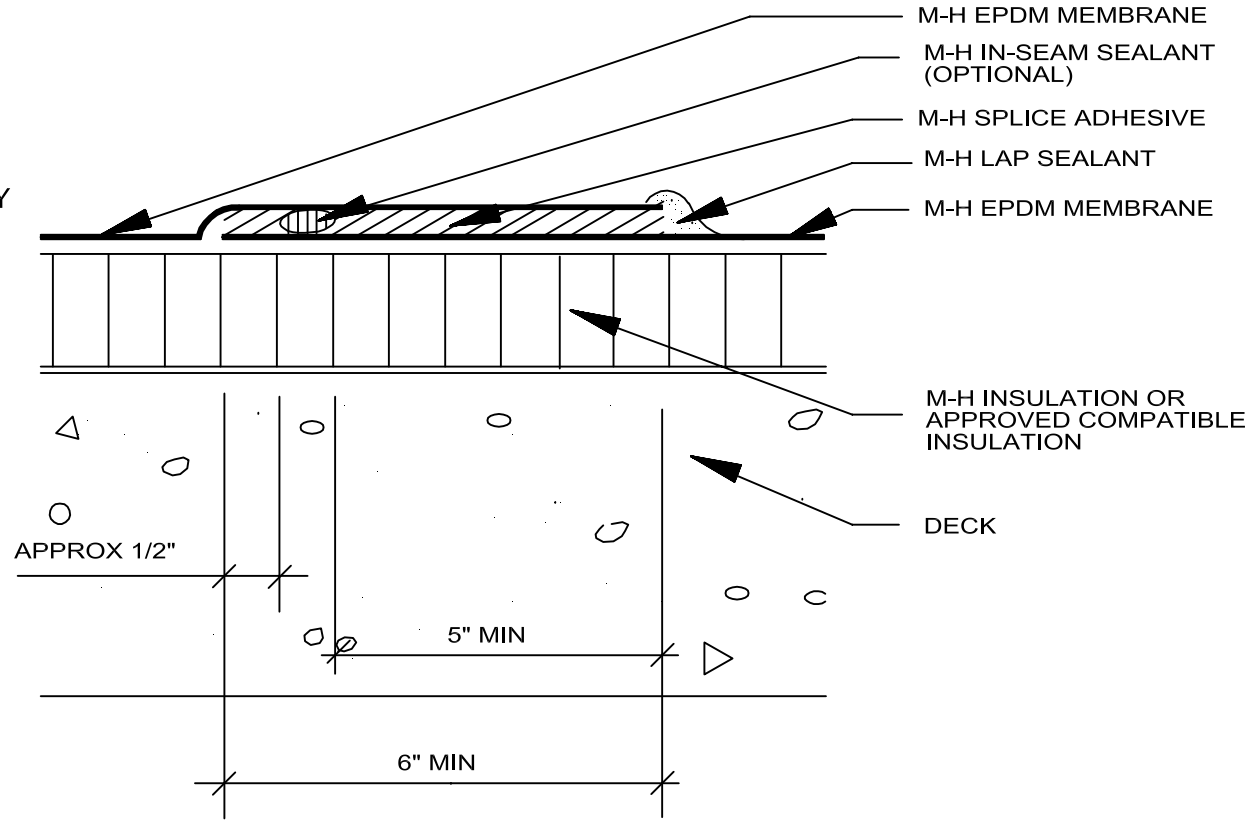

MULE-HIDE PRODUCTS CO., INC. **04/01/2004**	MEMBRANE SPLICE W/ SPLICE ADHESIVE - 6" SEAM	DETAIL NO.:
	SYSTEMS: ALL	MHE-115

NOTE: LAP SEALANT MUST BE APPLIED
ALONG ALL EDGES OF PATCH

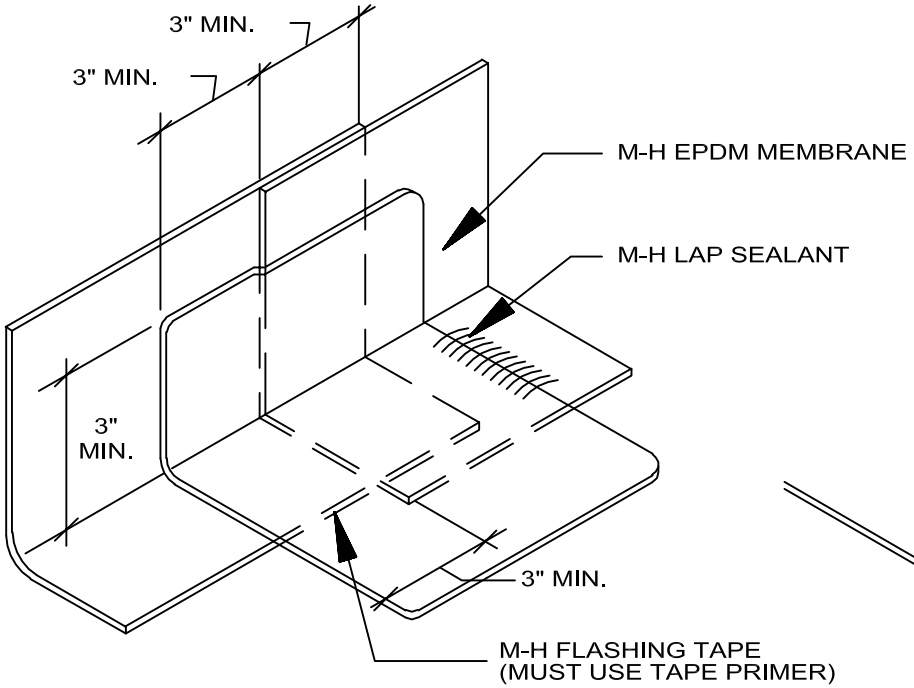

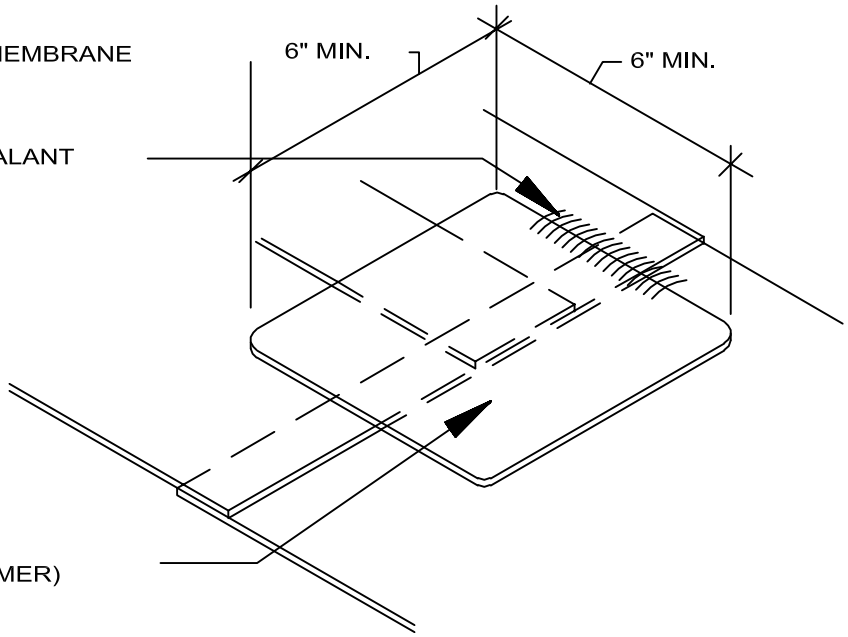

MULE-HIDE PRODUCTS CO., INC. 04/01/2004	END LAP & T-JOINT DETAIL	DETAIL NO.:
	SYSTEMS: ALL	MHE-118

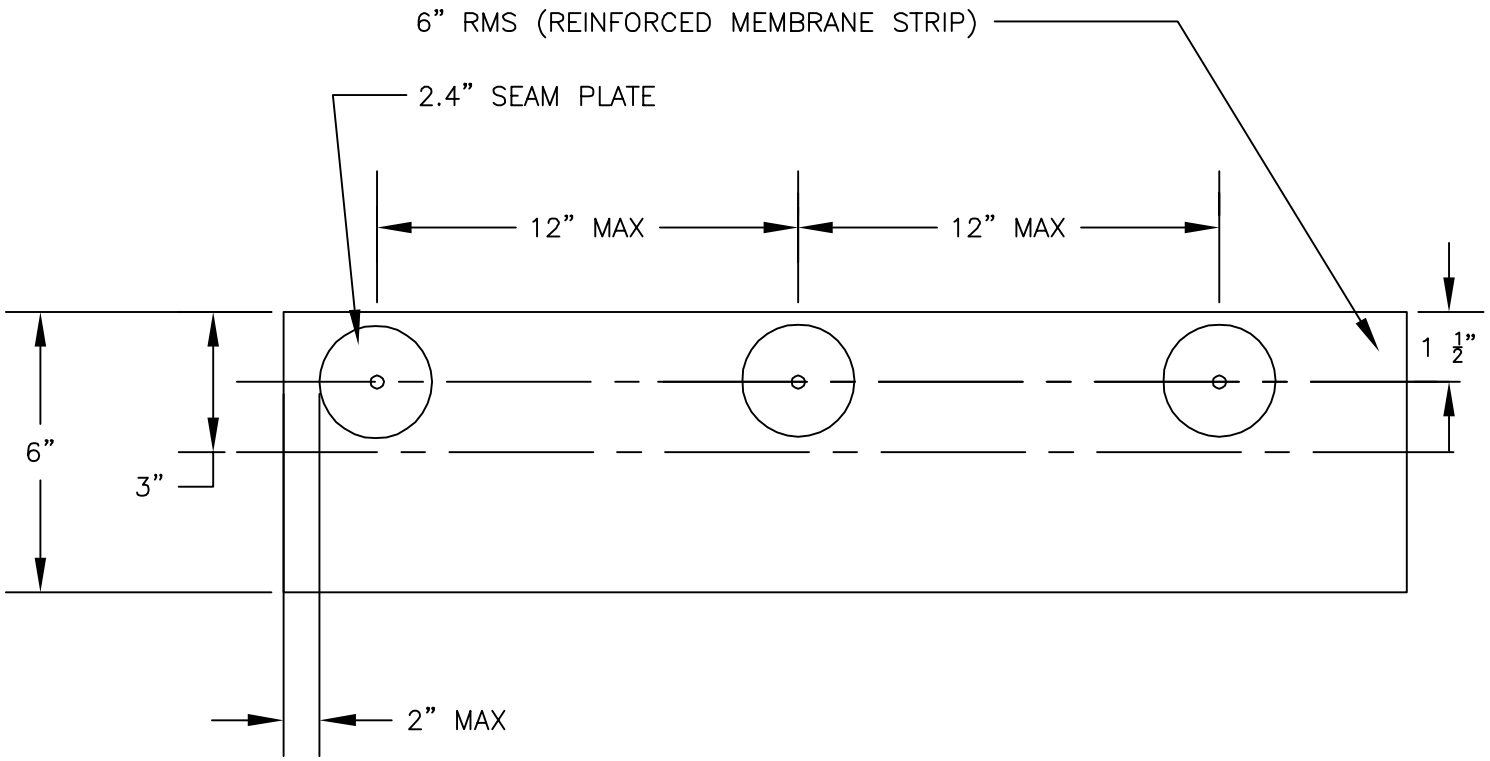

NOTE: NOT TO SCALE. FOR ILLUSTRATION PURPOSES ONLY

MULE-HIDE PRODUCTS CO., INC. 2010	***6" RMS ATTACHMENT STRIP***	***DETAIL NO.:***
	SYSTEMS: ***ALL***	***MHE-119***

®

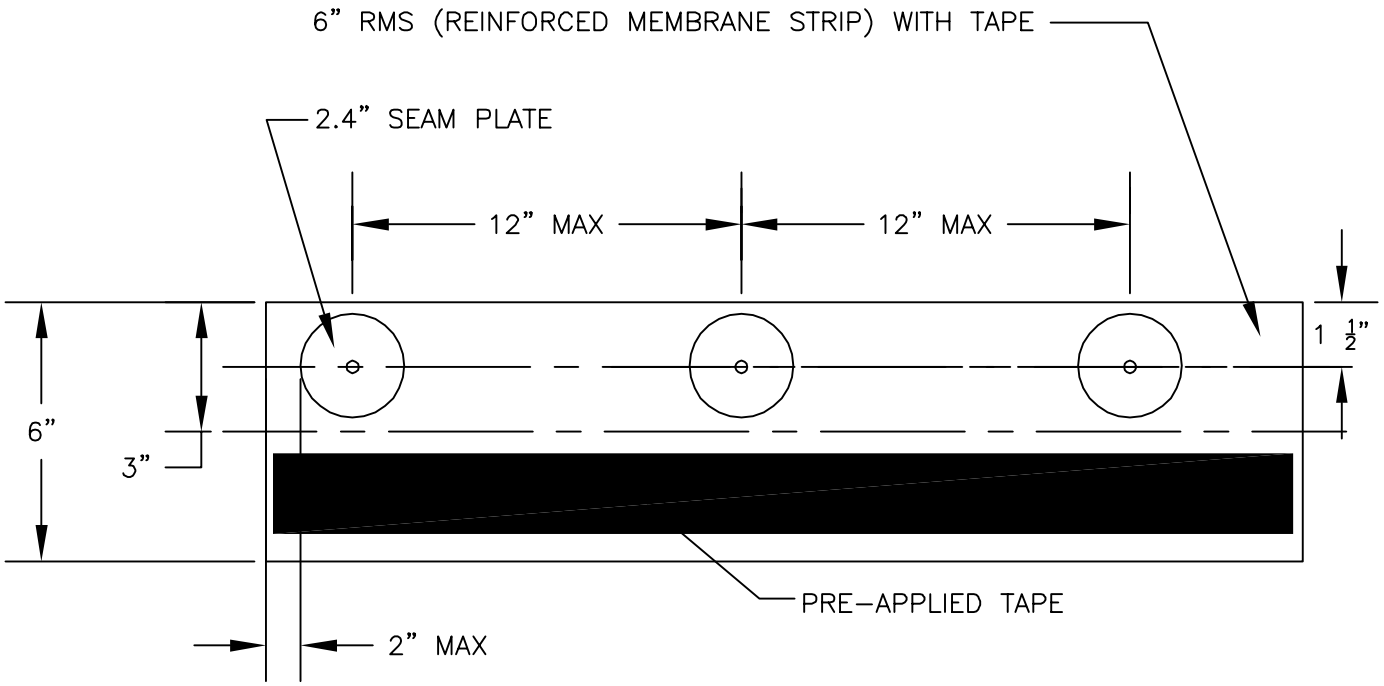

NOTE: NOT TO SCALE. FOR ILLUSTRATION PURPOSES ONLY

THIS DETAIL IS ACCEPTABLE FOR USE IN A 20-YEAR WARRANTED SYSTEM.

MULE-HIDE PRODUCTS CO., INC. 2010	***6" RMS WITH TAPE***	***DETAIL NO.:***
	SYSTEMS: ***ALL***	***MHE-119A***

®

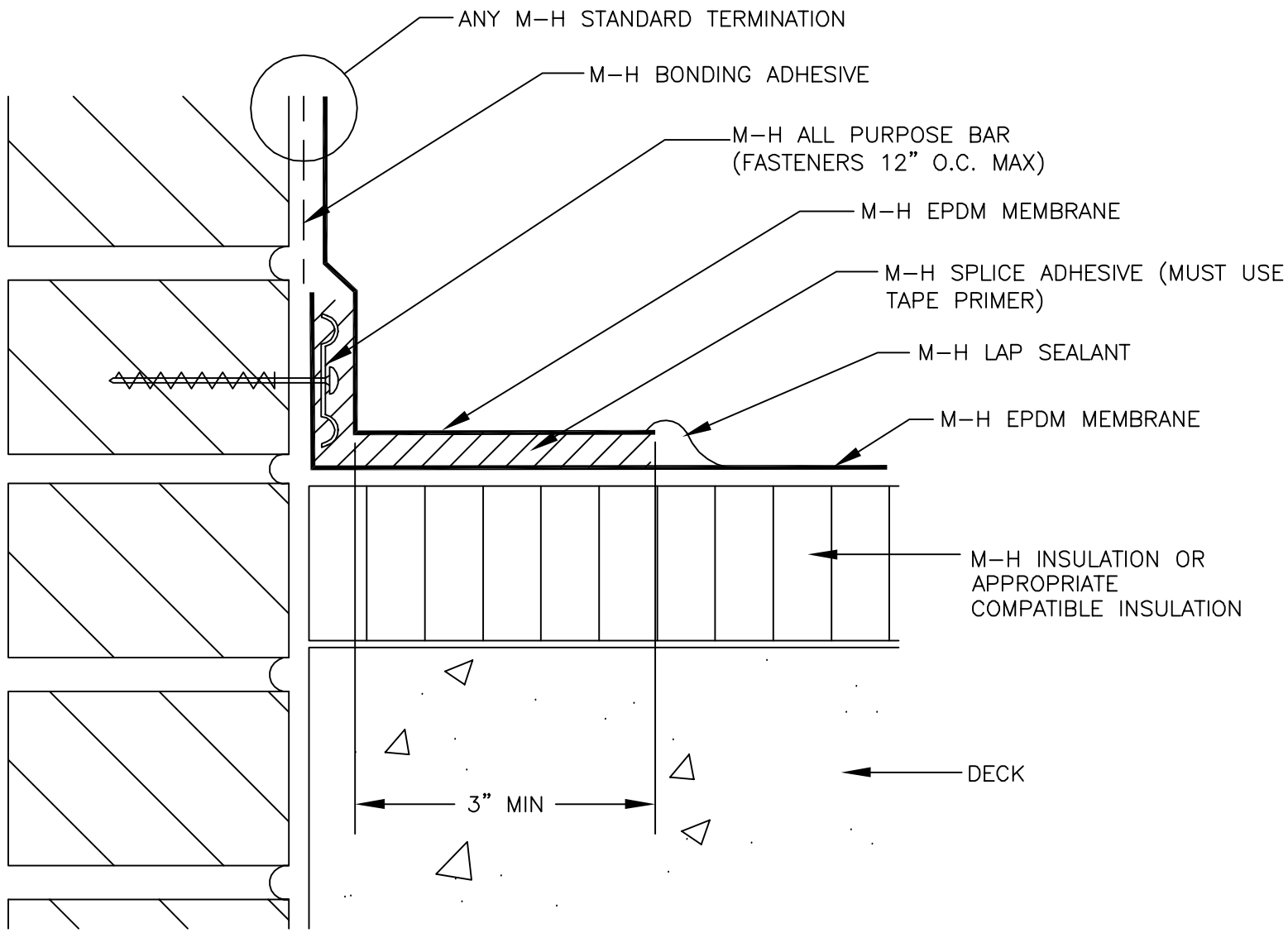

MULE-HIDE PRODUCTS CO., INC. 12/01/2008	**PARAPET/CURB FLASHING A-P BAR VERTICAL ATTACHMENT** **SYSTEMS: ALL**	**DETAIL NO.:** **MHE-120**

®

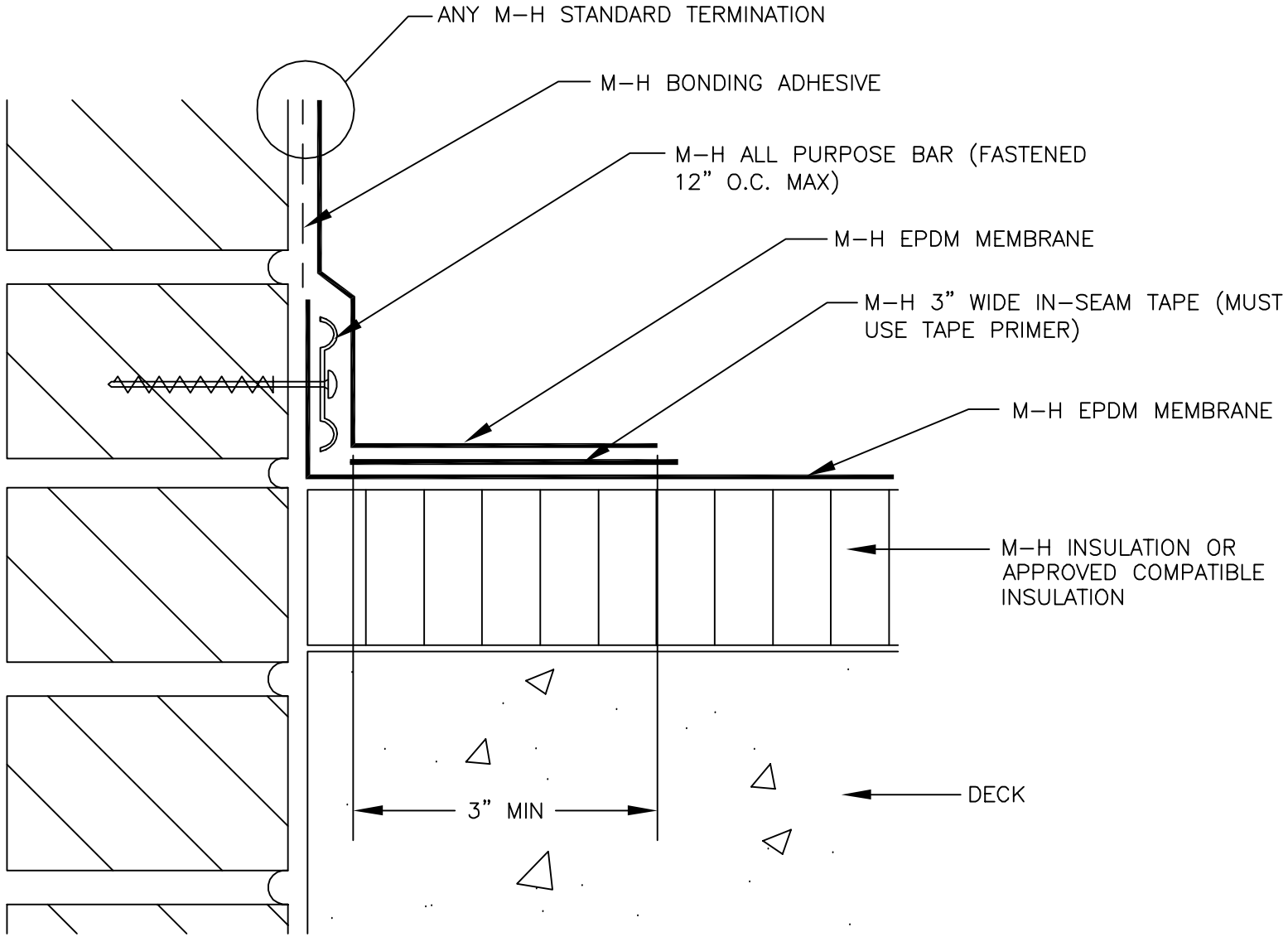

MULE-HIDE PRODUCTS CO., INC. 12/01/2008	**PARAPET/CURB FLASHING A-P BAR VERTICAL ATTACHMENT** **SYSTEMS: ALL**	**DETAIL NO.:** **MHE-120A**

®

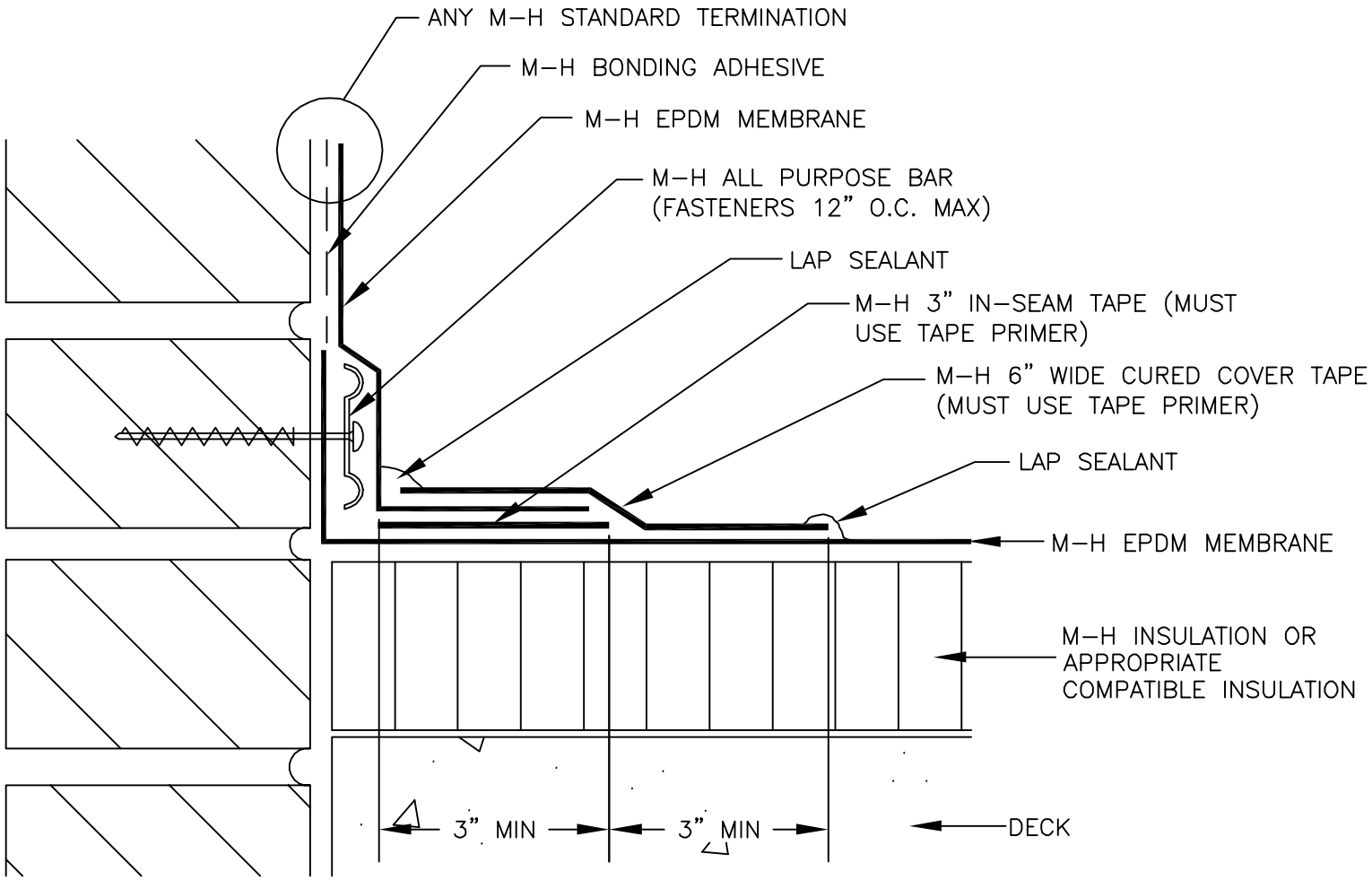

NOTE:

THIS DETAIL IS ACCEPTABLE FOR USE IN A 20–YEAR WARRANTED SYSTEM

MULE-HIDE PRODUCTS CO., INC. 12/01/2008	**PARAPET/CURB FLASHING A-P BAR VERTICAL ATTACHMENT**	**DETAIL NO.:**
	SYSTEMS: BALLASTED, FULLY ADHERED, LIVING ROOF	**MHE-120B**

®

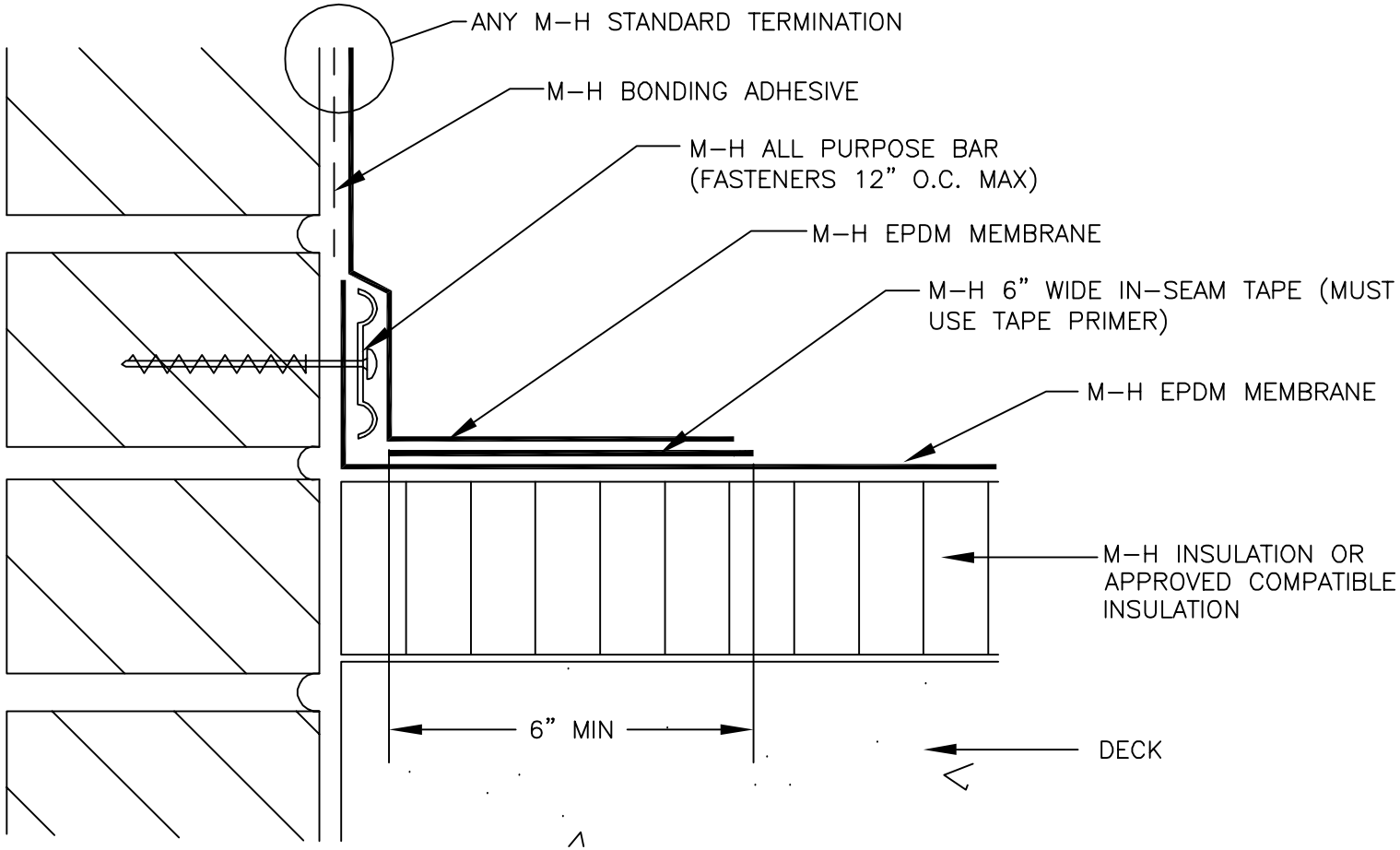

NOTE:

THIS DETAIL IS ACCEPTABLE FOR USE IN A 20–YEAR WARRANTED SYSTEM

MULE-HIDE PRODUCTS CO., INC. 12/01/2008	**PARAPET/CURB FLASHING A-P BAR VERTICAL ATTACHMENT**	**DETAIL NO.:**
	SYSTEMS: ALL	**MHE-120C**

®

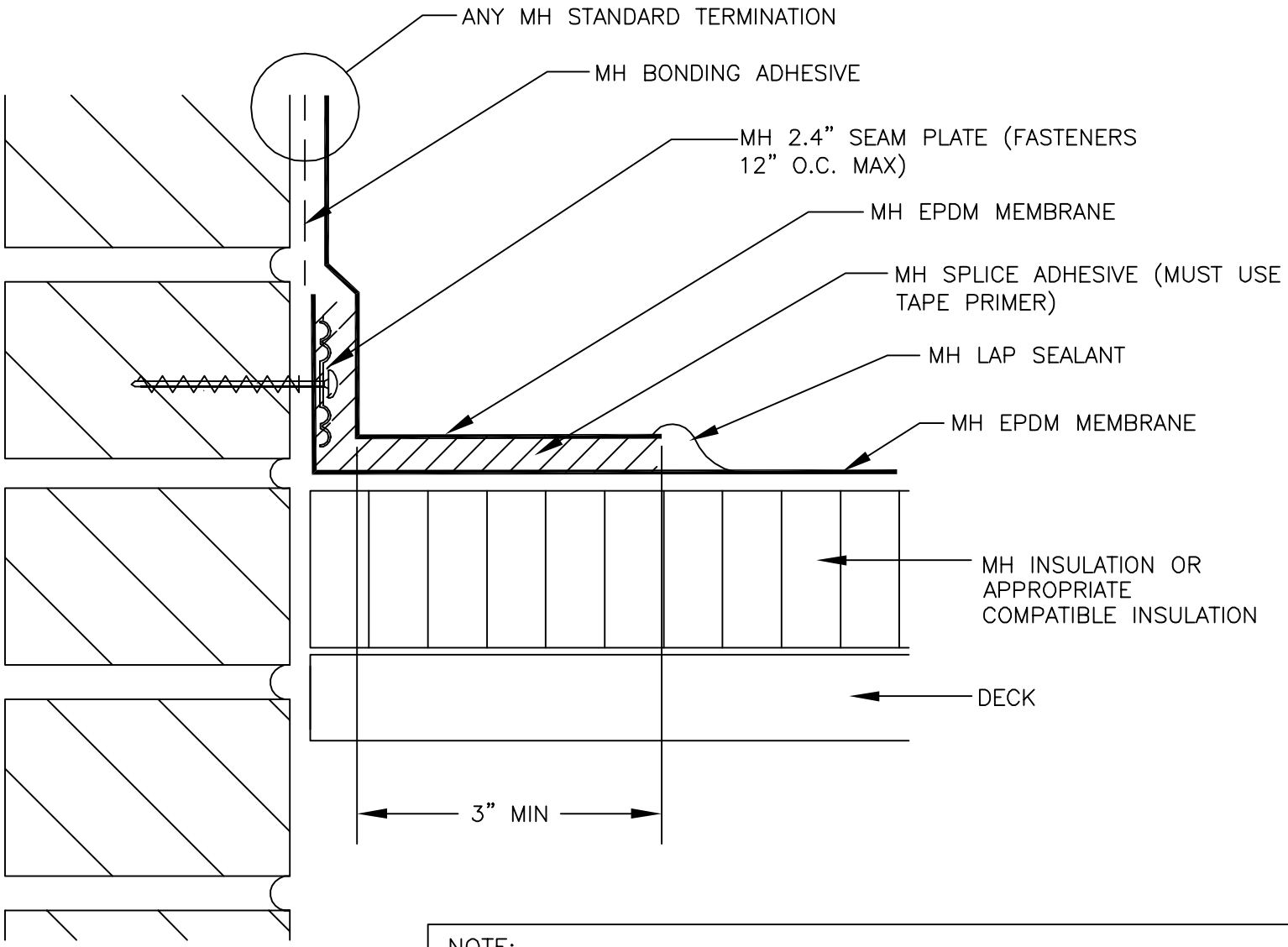

NOTE:

THIS DETAIL IS NOT ACCEPTABLE FOR A 15 OR 20 YEAR WARRANTY.

MULE-HIDE PRODUCTS CO., INC. 12/01/2008	***PARAPET / CURB FLASHING W/ 2.4" SEAM PLATES / VERTICAL ATTACHMENT***	***DETAIL NO.:***
	SYSTEMS: REINFORCED MEBMRANES ONLY	***MHE-121***

®

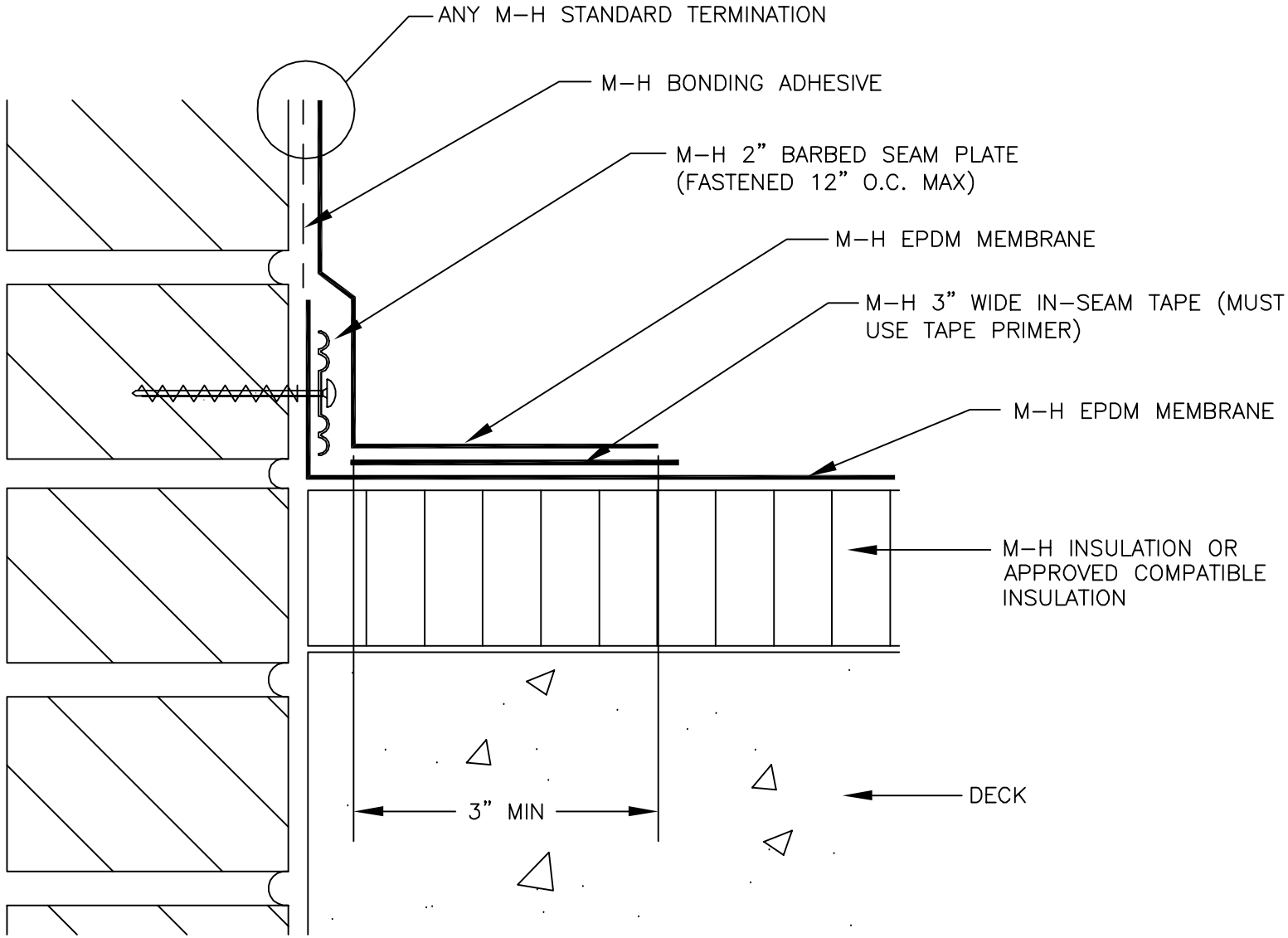

MULE-HIDE PRODUCTS CO., INC. 12/01/2008	**PARAPET/CURB FLASHING 2" BARBED SEAM PLATES/VERTICAL ATTACHMENT** **SYSTEMS: REINFORCED MEMBRANES ONLY**	**DETAIL NO.:** **MHE-121A**

®

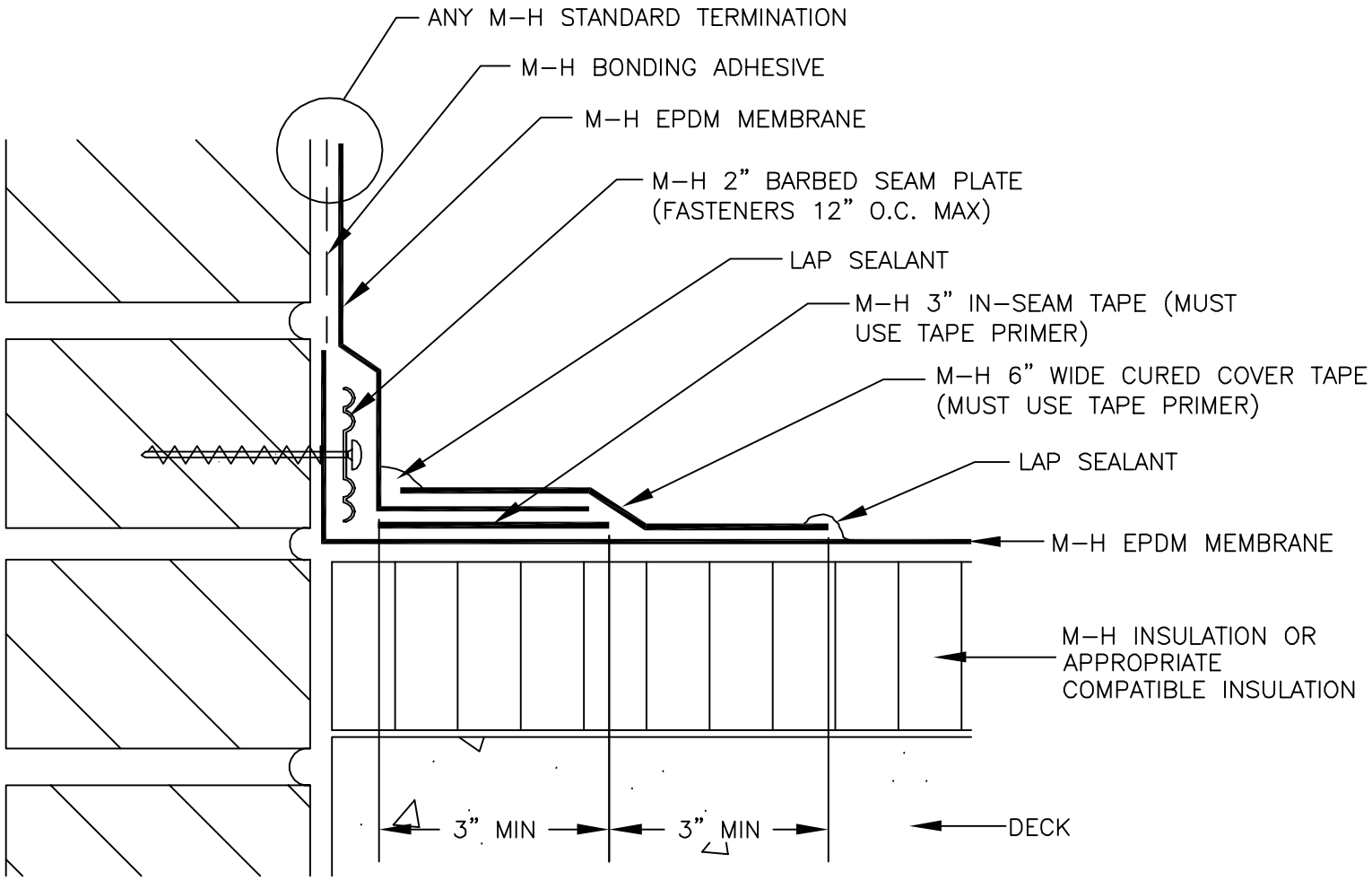

NOTE:

THIS DETAIL IS ACCEPTABLE FOR USE IN A 20–YEAR WARRANTED SYSTEM

MULE-HIDE PRODUCTS CO., INC. 12/01/2008	**PARAPET/CURB FLASHING 2" BARBED SEAM PLATES/VERTICAL ATTACHMENT**	**DETAIL NO.:**
	SYSTEMS: REINFORCED MEMBRANES ONLY	**MHE-121B**

®

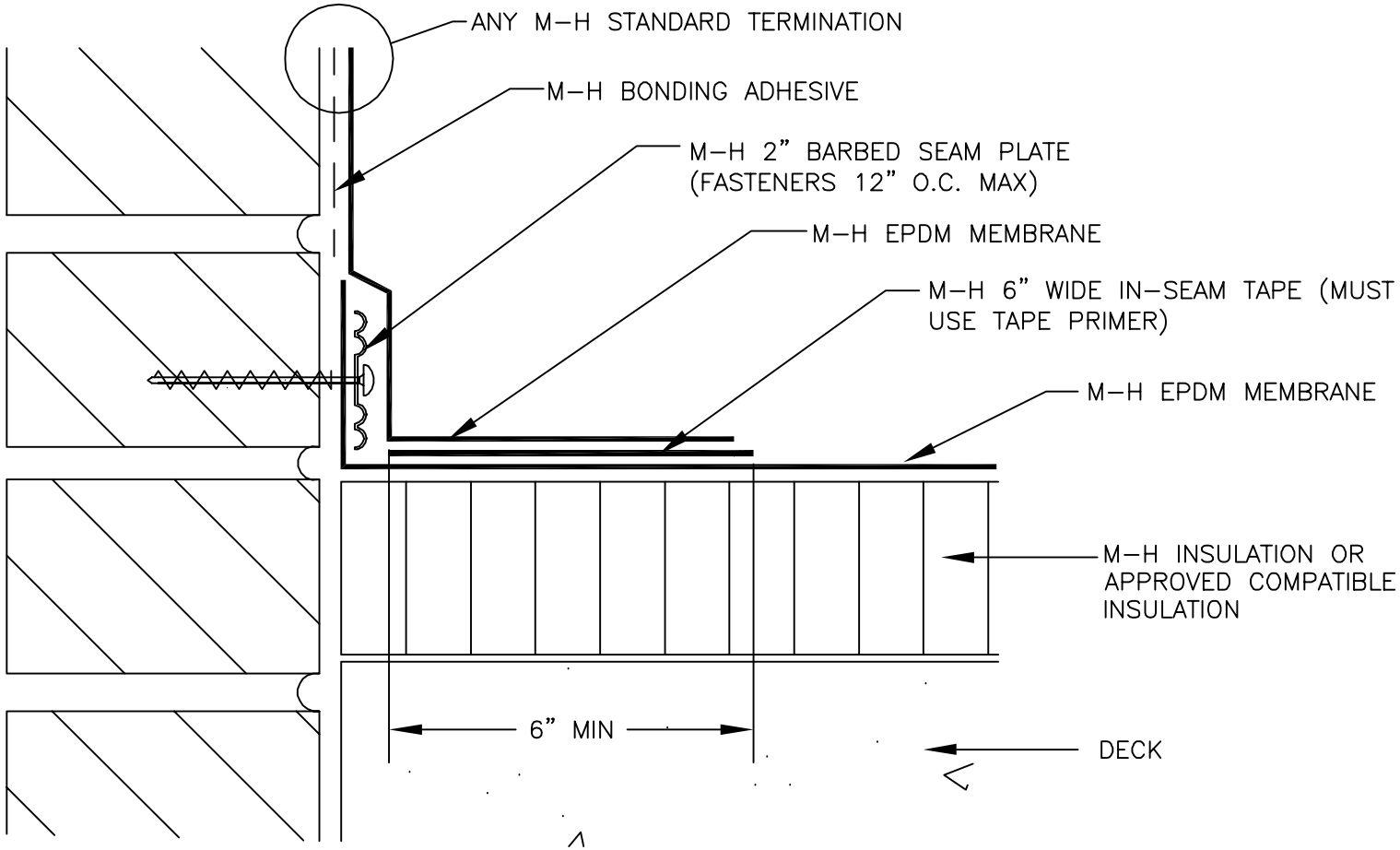

NOTE:

THIS DETAIL IS ACCEPTABLE FOR USE IN A 20–YEAR WARRANTED SYSTEM

MULE-HIDE PRODUCTS CO., INC. 12/01/2008	**PARAPET/CURB FLASHING 2" BARBED SEAM PLATES/VERTICAL ATTACHMENT**	**DETAIL NO.:**
	SYSTEMS: REINFORCED MEMBRANES ONLY	**MHE-121C**

®

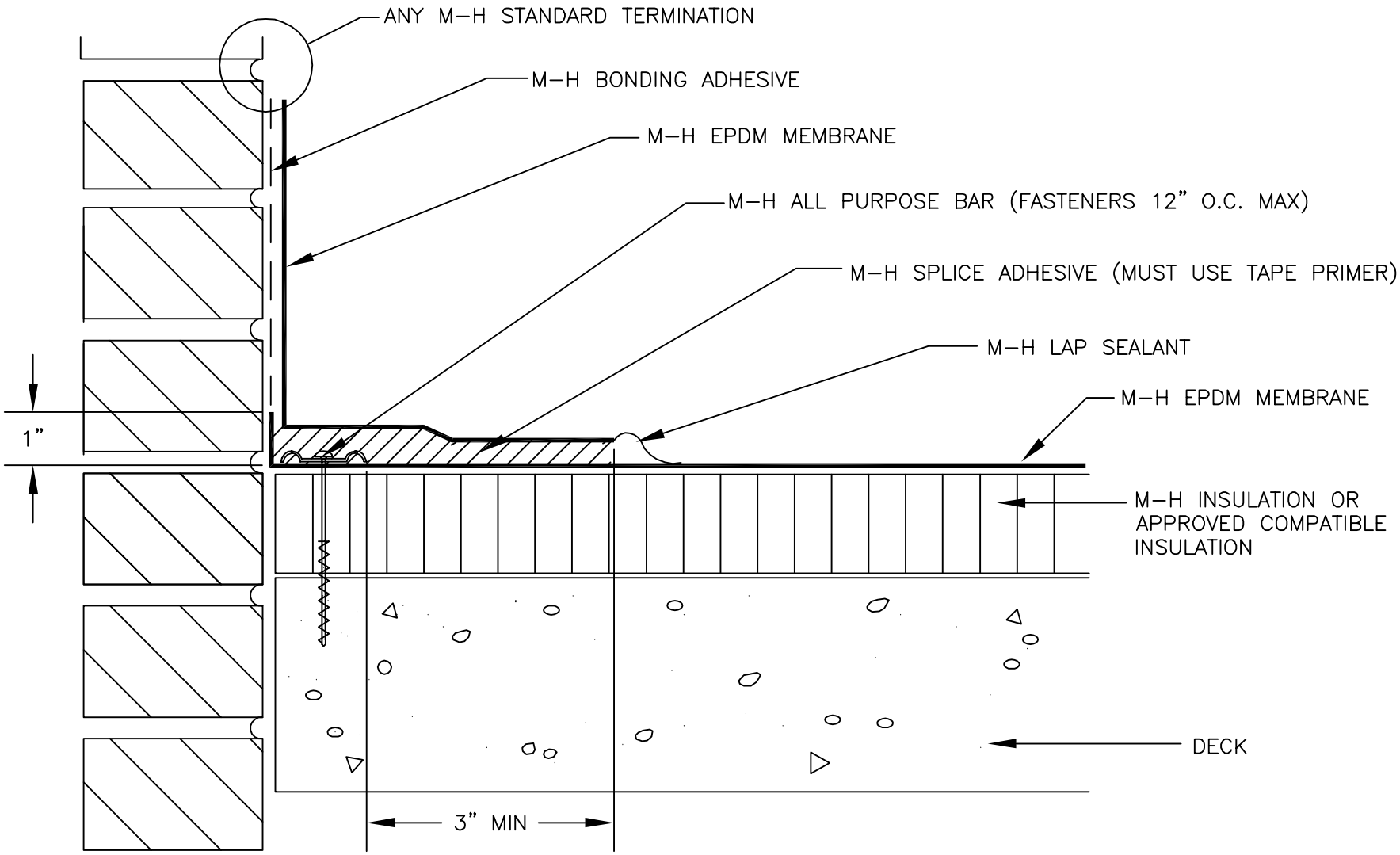

MULE-HIDE PRODUCTS CO., INC. 12/01/2008	**PARAPET/CURB FLASHING W/A-P BAR HORIZONTAL** **SYSTEMS: FULLY ADHERED & BALLASTED ONLY**	**DETAIL NO.:** **MHE-122**

®

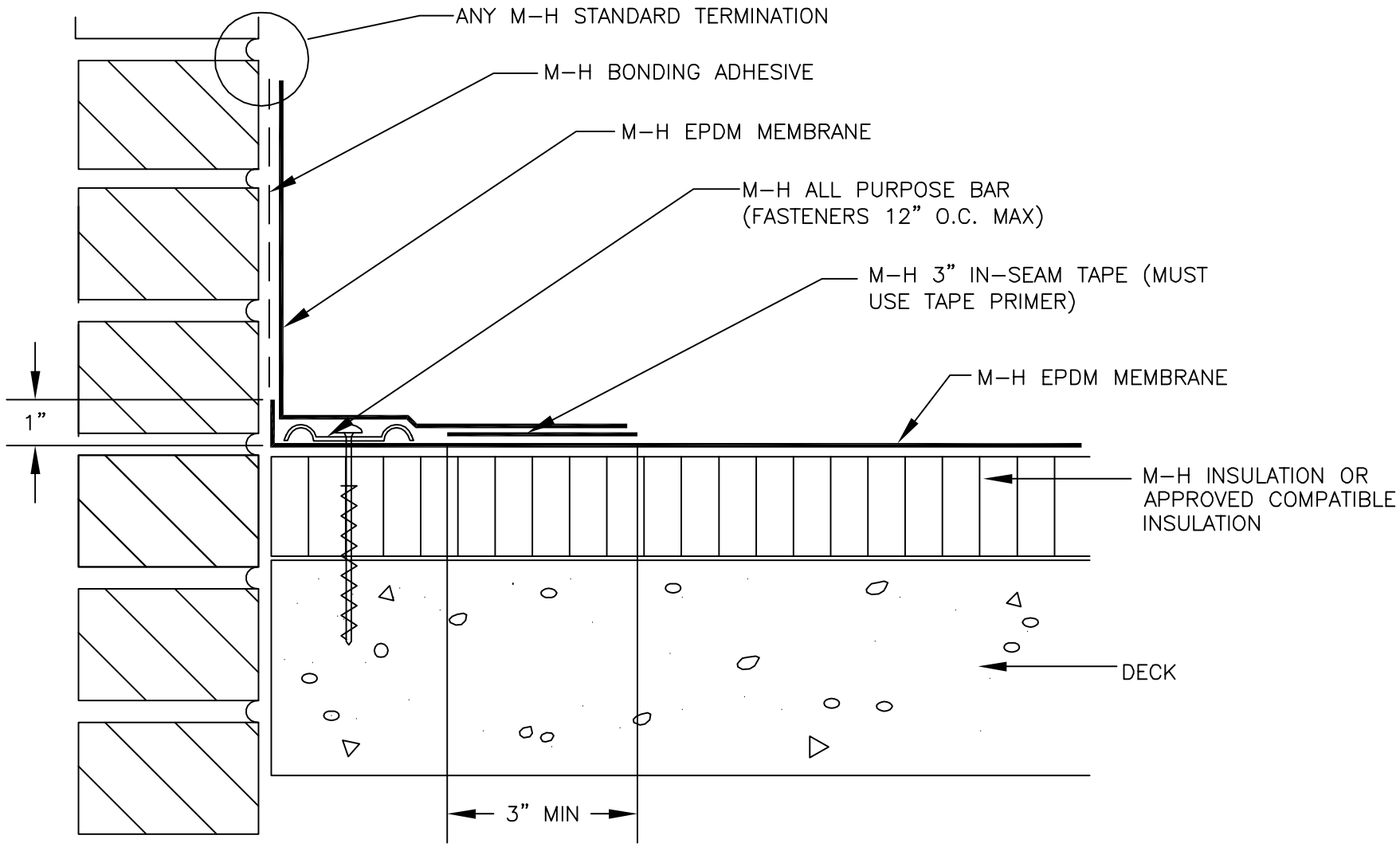

MULE-HIDE PRODUCTS CO., INC. 12/1/2008	**PARAPET/CURB FLASHING W/A-P BAR HORIZONTAL**	**DETAIL NO.:**
	SYSTEMS: ALL	**MHE-122A**

®

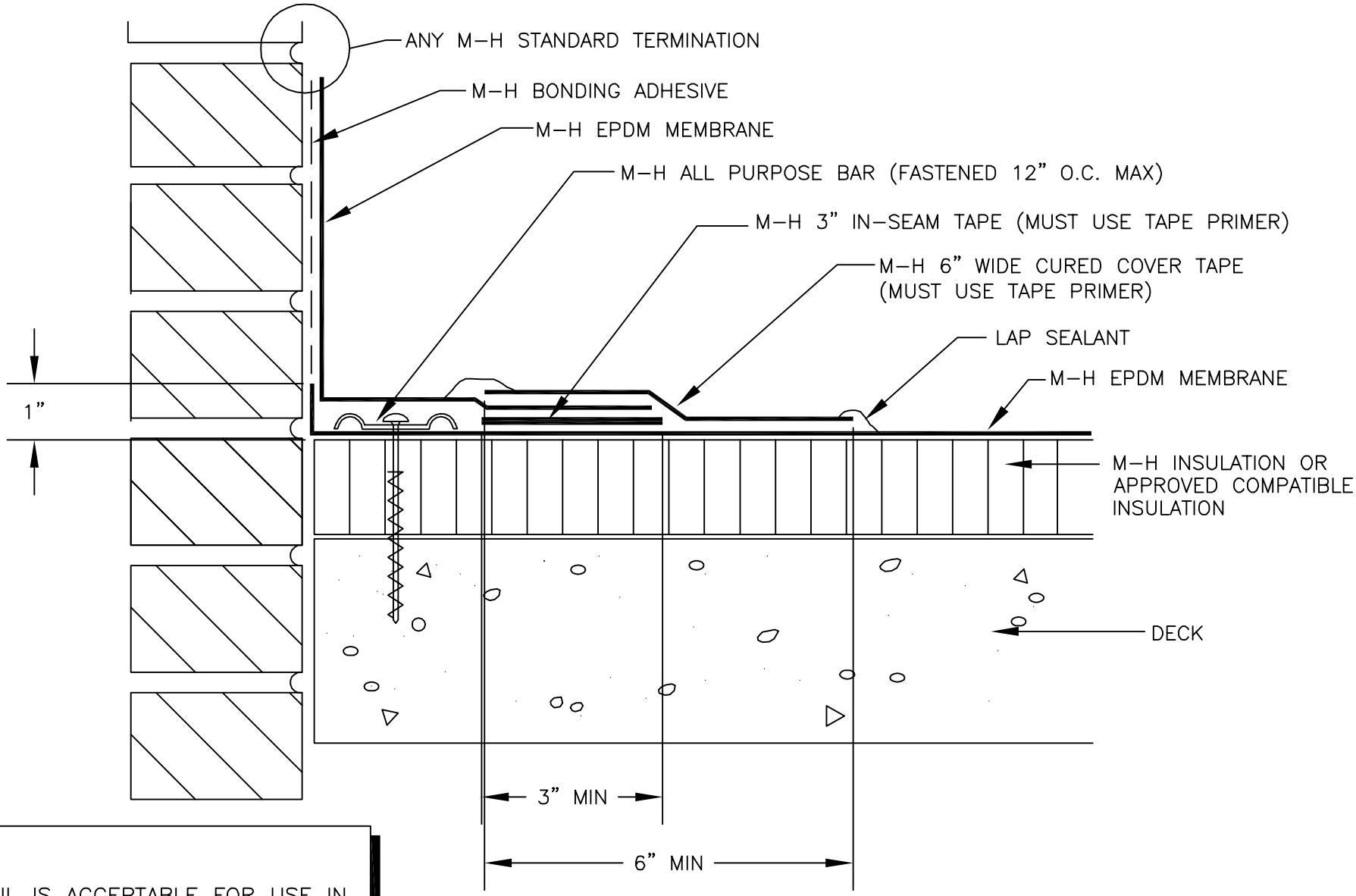

NOTE:

THIS DETAIL IS ACCEPTABLE FOR USE IN A 20–YEAR WARRANTED SYSTEM

MULE-HIDE PRODUCTS CO., INC. 12/01/2008	**PARAPET/CURB FLASHING W/A-P BAR HORIZONTAL**	**DETAIL NO.:**
	SYSTEMS: ALL	**MHE-122B**

®

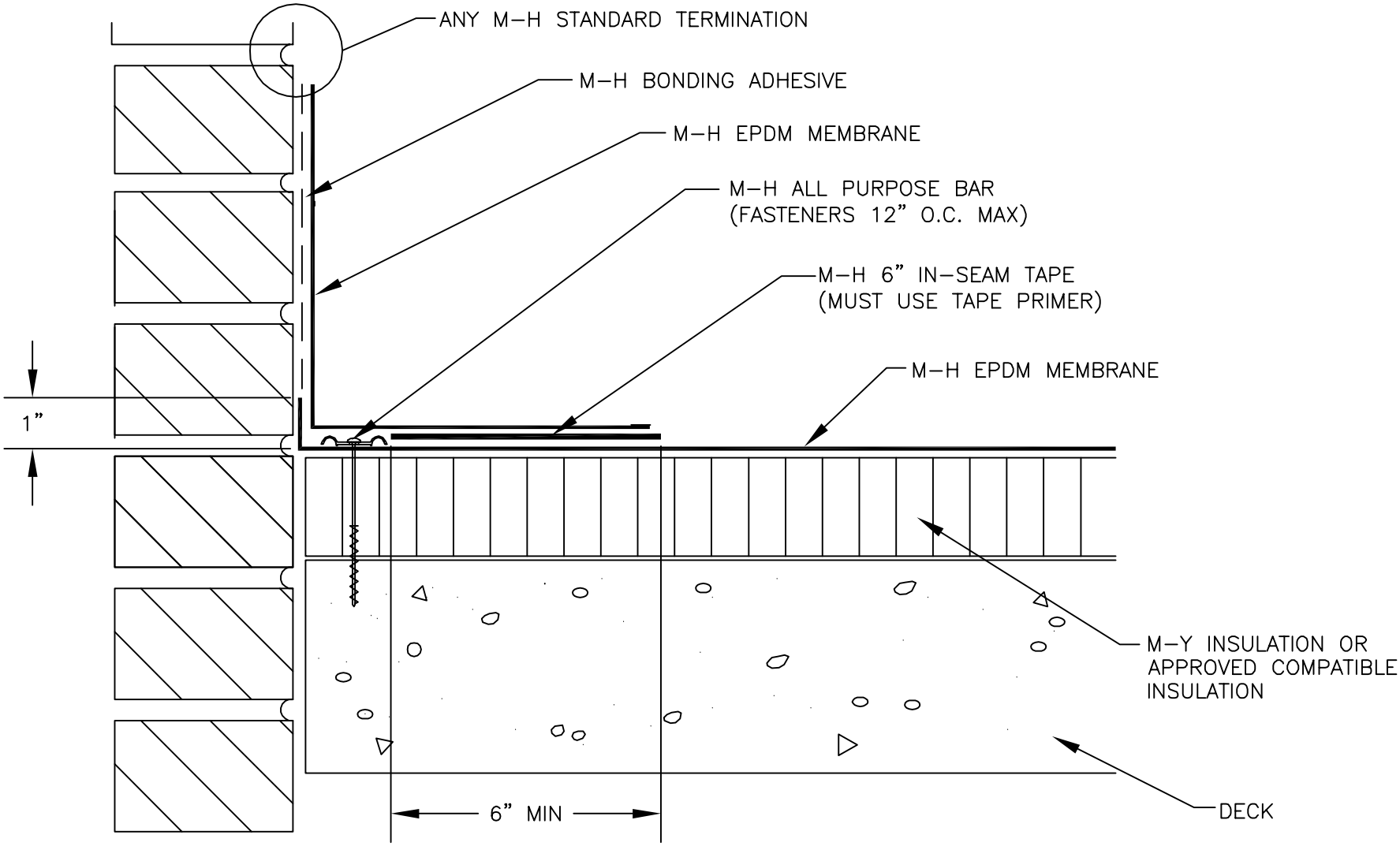

NOTE:

THIS DETAIL IS ACCEPTABLE FOR USE IN A 20–YEAR WARRANTED SYSTEM

MULE-HIDE PRODUCTS CO., INC. 12/01/2008	**PARAPET/CURB FLASHING W/A-P BAR - HORIZONTAL**	**DETAIL NO.:**
	SYSTEMS: ALL	**MHE-122C**

®

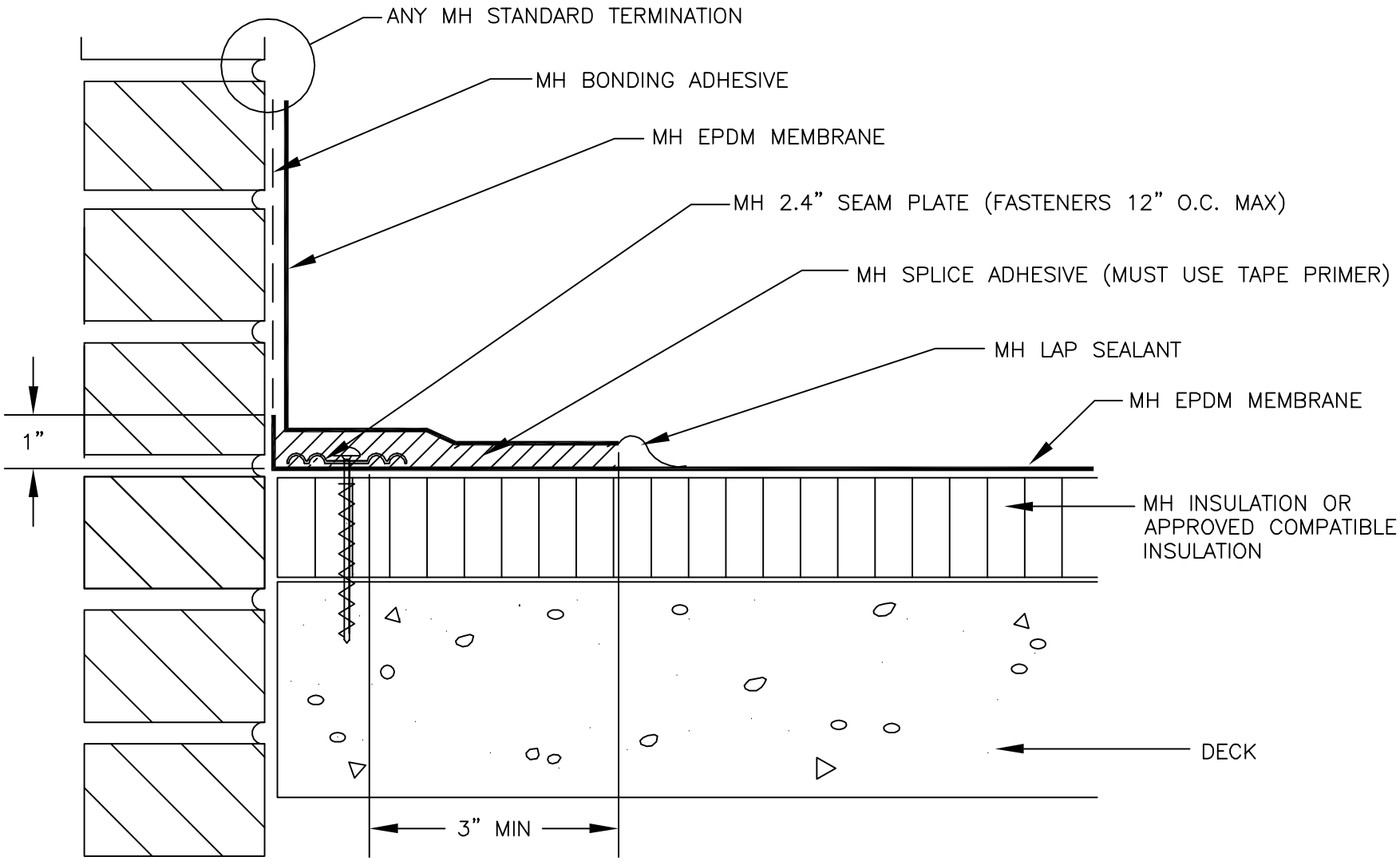

NOTE:

THIS DETAIL IS NOT ACCEPTABLE FOR A 15 OR 20 YEAR WARRANTY.

MULE-HIDE PRODUCTS CO., INC. 12/01/2008	***PARAPET / CURB FLASHING W/ 2.4" SEAM PLATES / HORIZONTAL***	***DETAIL NO.:***
	SYSTEMS: REINFORCED MEMBRANES ONLY	***MHE-123***

®

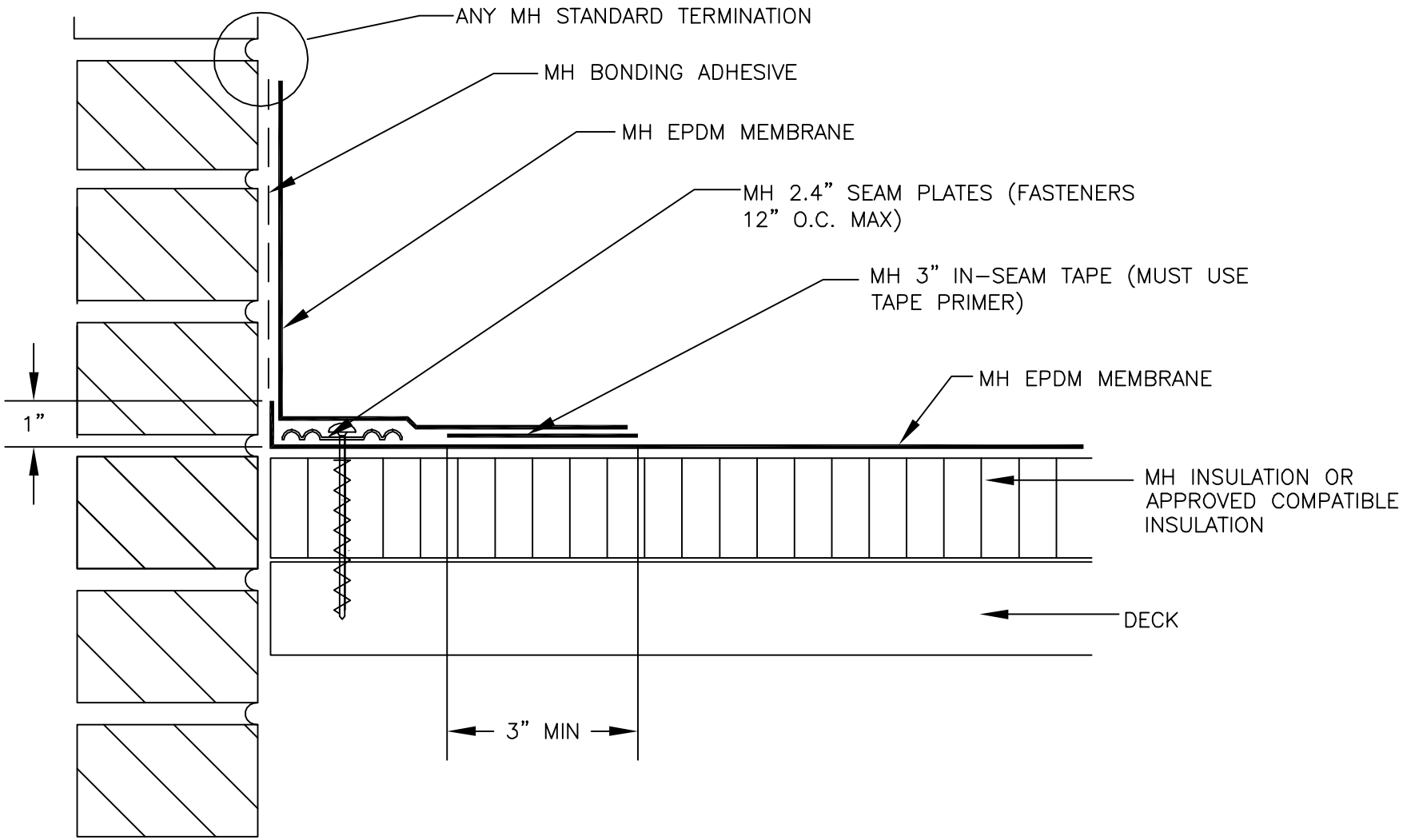

NOTE:

THIS DETAIL IS ACCEPTABLE FOR A 10 OR 15 YEAR WARRANTY.

MULE-HIDE PRODUCTS CO., INC. 12/1/2008	***PARAPET / CURB FLASHING W 2.4" SEAM PLATES - HORIZONTAL***	***DETAIL NO.:***
	SYSTEMS: REINFORCED MEMBRANES ONLY	***MHE-123A***

®

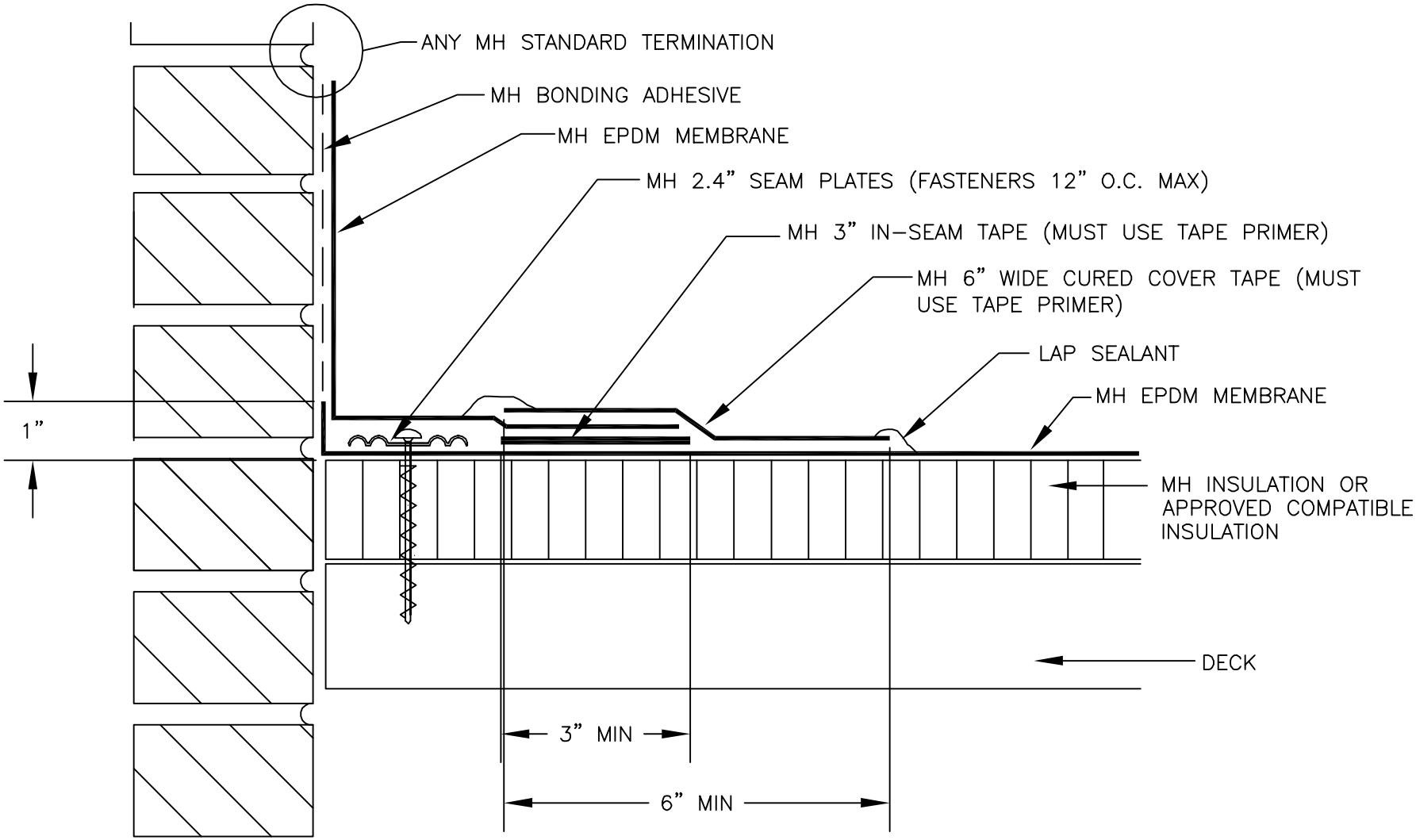

NOTE:

THIS DETAIL IS ACCEPTABLE FOR USE IN A 20-YEAR WARRANTED SYSTEM

MULE-HIDE PRODUCTS CO., INC. 12/01/2008	***PARAPET / CURB FLASHING W/ 2.4" SEAM PLATES - HORIZONTAL***	***DETAIL NO.:***
	SYSTEMS: REINFORCED MEMBRANES ONLY	***MHE-123B***

®

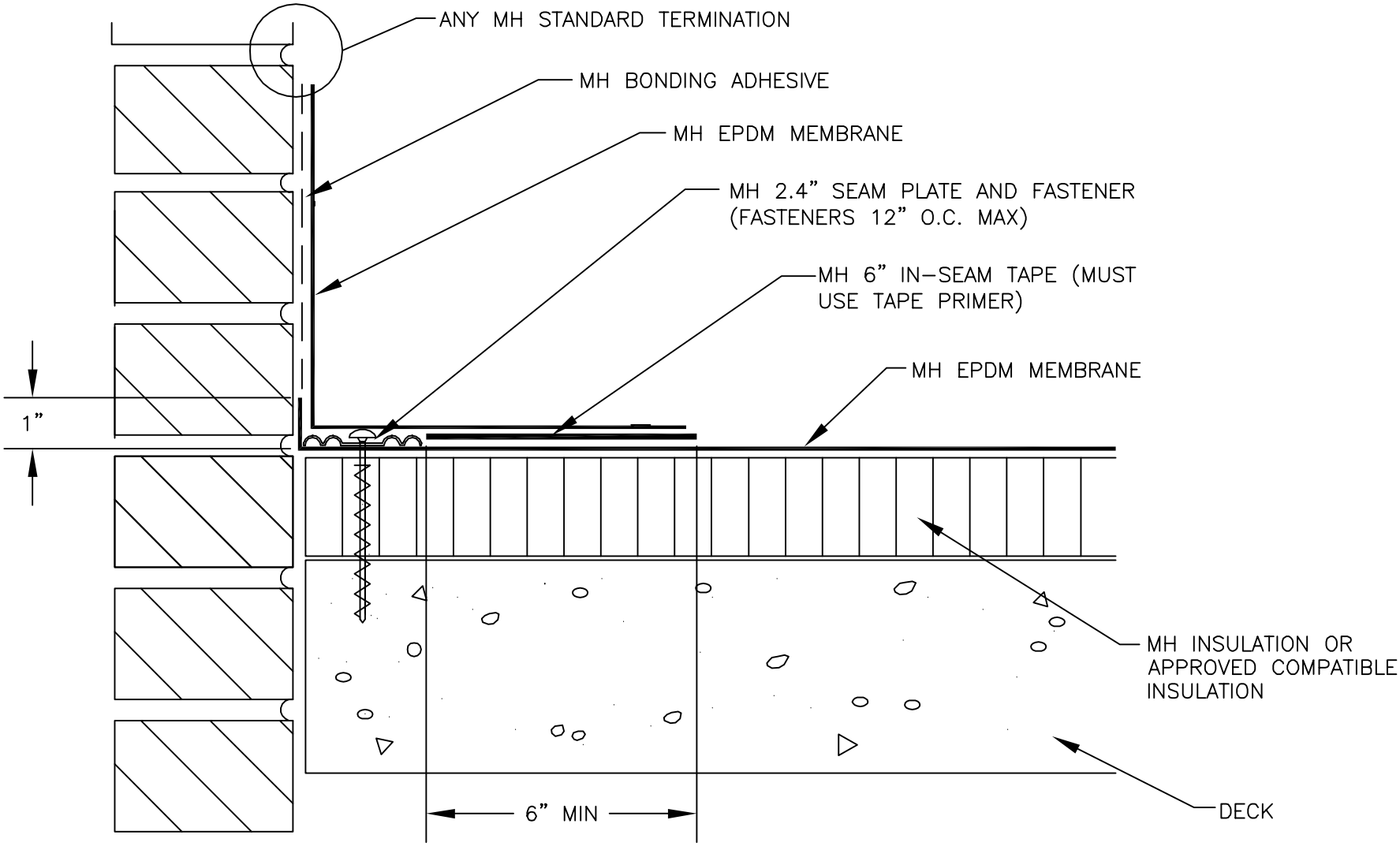

NOTE:

THIS DETAIL IS ACCEPTABLE FOR USE IN A 20-YEAR WARRANTED SYSTEM

MULE-HIDE PRODUCTS CO., INC. 12/01/2008	***PARAPET / CURB FLASHING W / 2.4" SEAM PLATES - HORIZONTAL***	***DETAIL NO.:***
	SYSTEMS: REINFORCED MEMBRANES ONLY	***MHE-123C***

®

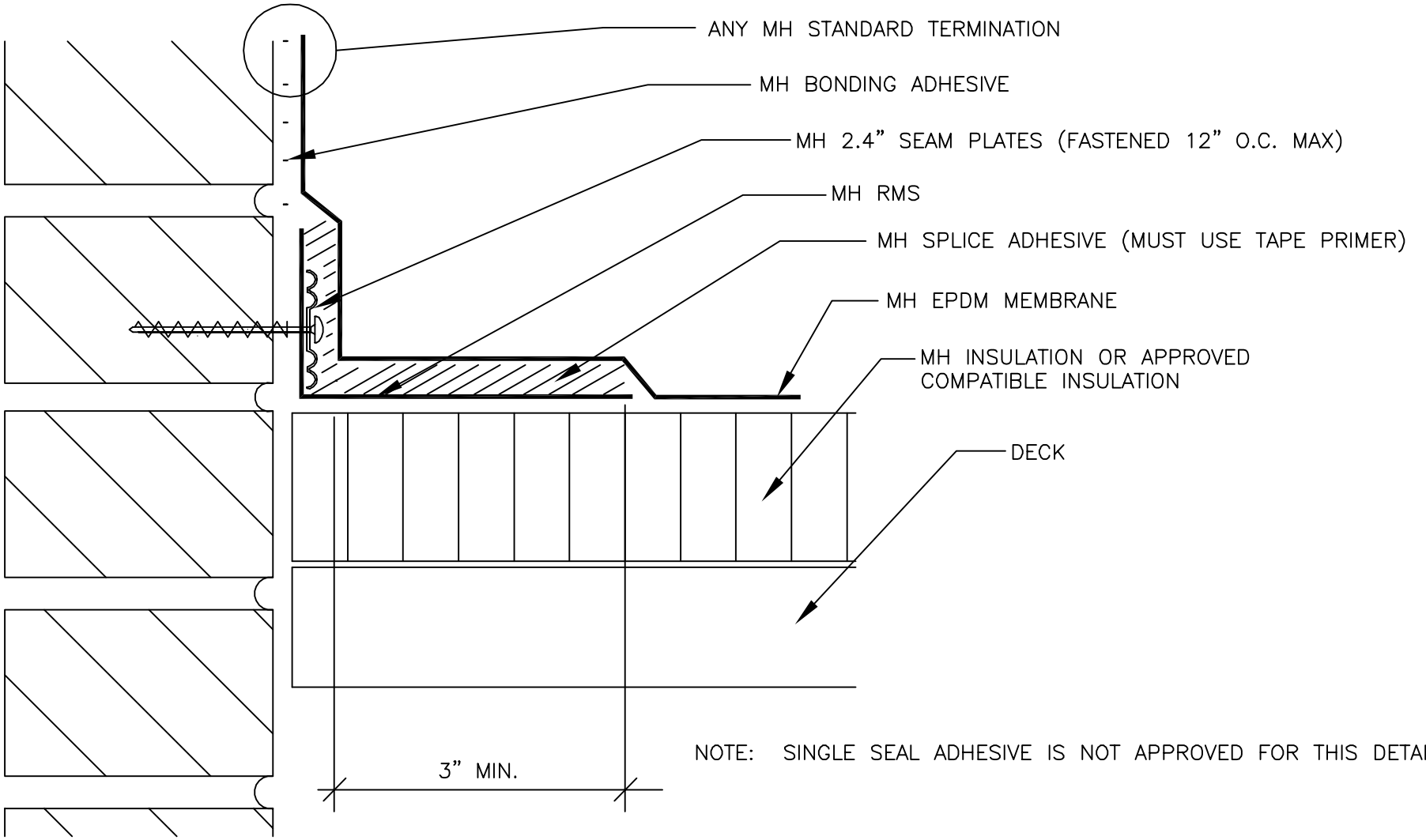

NOTE: SINGLE SEAL ADHESIVE IS NOT APPROVED FOR THIS DETAIL

MULE-HIDE PRODUCTS CO., INC. 2010	***PARAPET / CURB FLASHING W / RMS - VERTICAL***	***DETAIL NO.:***
	SYSTEMS:	***MHE-124***
	ALL	

®

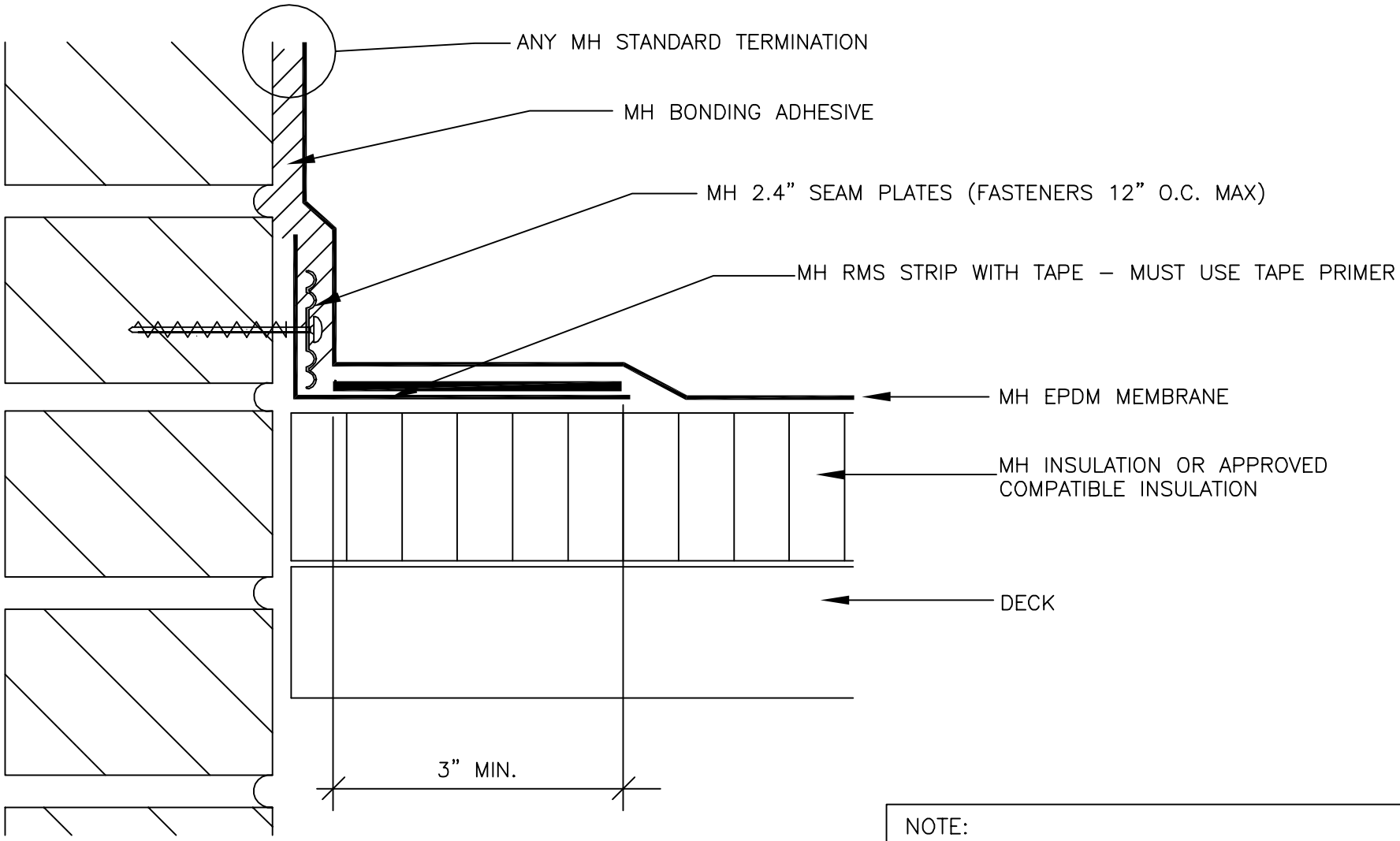

NOTE:

THIS DETAIL IS ACCEPTABLE FOR USE IN A 20–YEAR WARRANTED SYSTEM

MULE-HIDE PRODUCTS CO., INC. 2010	***PARAPET / CURB FLASHING RMS W / TAPE - VERTICAL***	***DETAIL NO.:***
	SYSTEMS:	***MHE-124A***
	ALL	

®

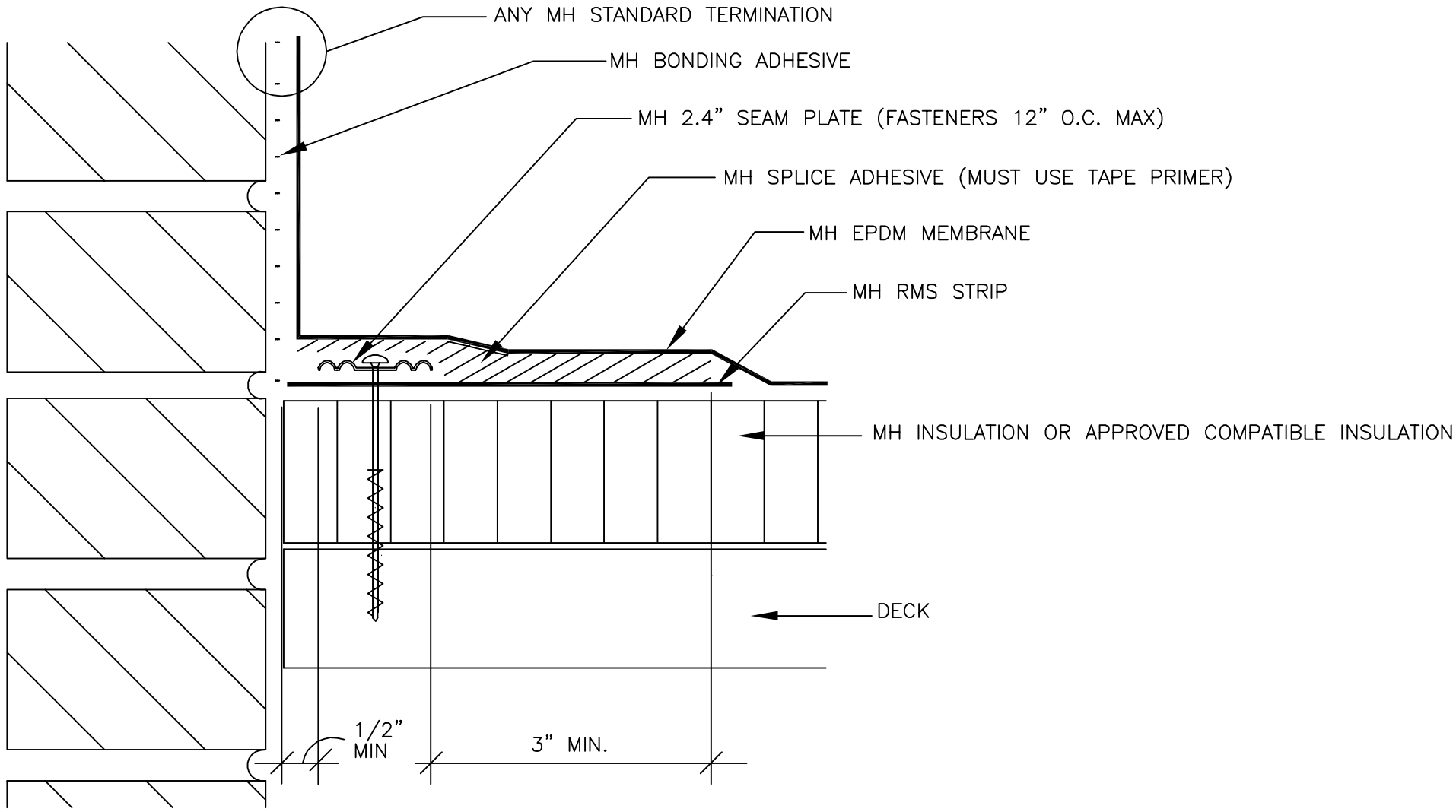

NOTE: SINGLE SEAL ADHESIVE IS NOT APPROVED FOR THIS DETAIL

MULE-HIDE PRODUCTS CO., INC. 2010	***PARAPET / CURB FLASHING W / RMS - HORIZONTAL***	***DETAIL NO.:***
	SYSTEMS:	***MHE-125***
	ALL	

®

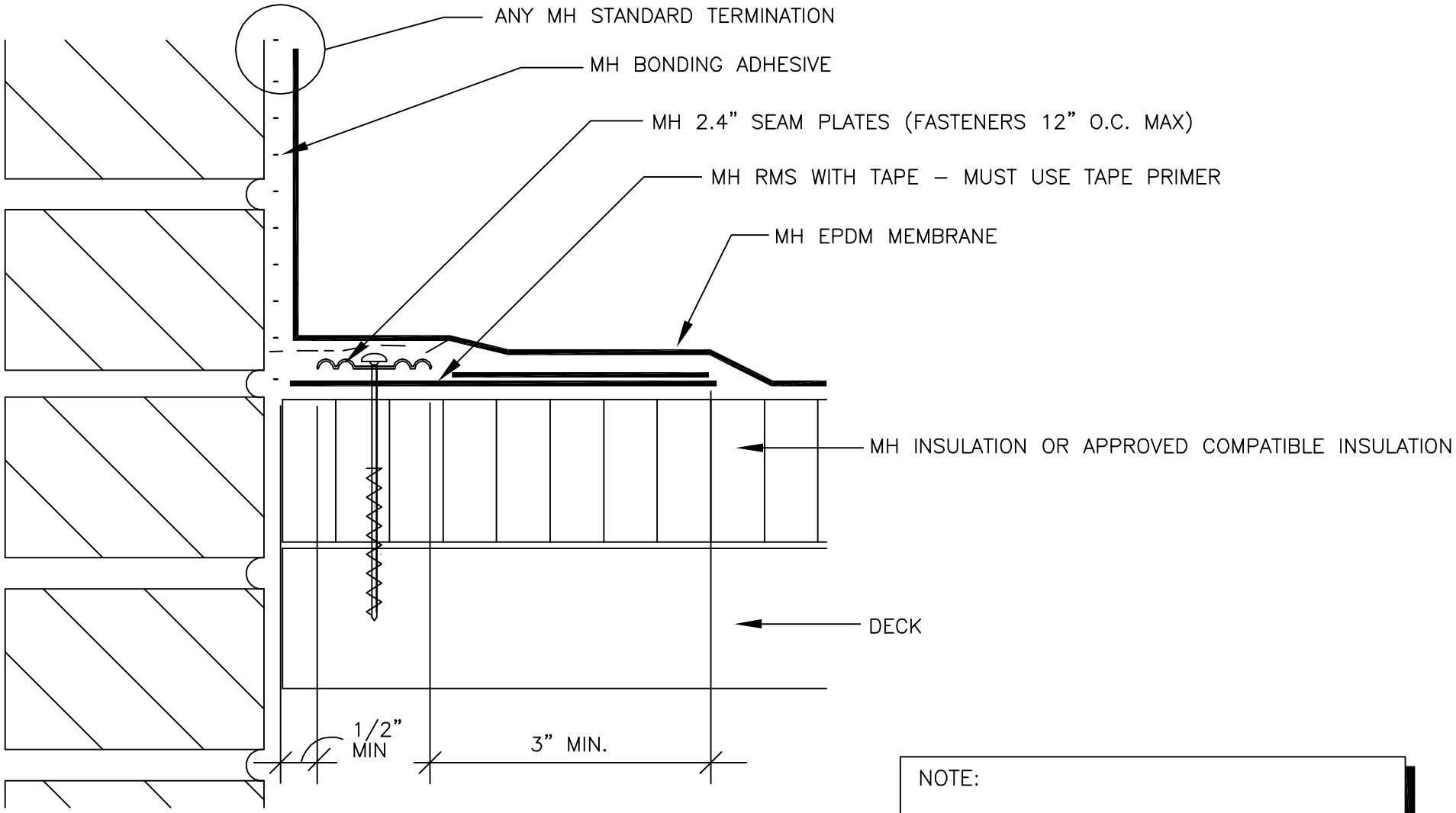

NOTE:

THIS DETAIL IS ACCEPTABLE FOR USE IN A 20–YEAR WARRANTED SYSTEM

MULE-HIDE PRODUCTS CO., INC. 2010	***PARAPET / CURB FLASHING RMS W / TAPE - HORIZONTAL***	***DETAIL NO.:***
	SYSTEMS:	***MHE-125A***
	ALL	

®

NOTE: ALL LEAD AND OTHER FLASHING MATERIAL MUST BE REMOVED ON TEAR-OFF AND RECOVER PROJECTS

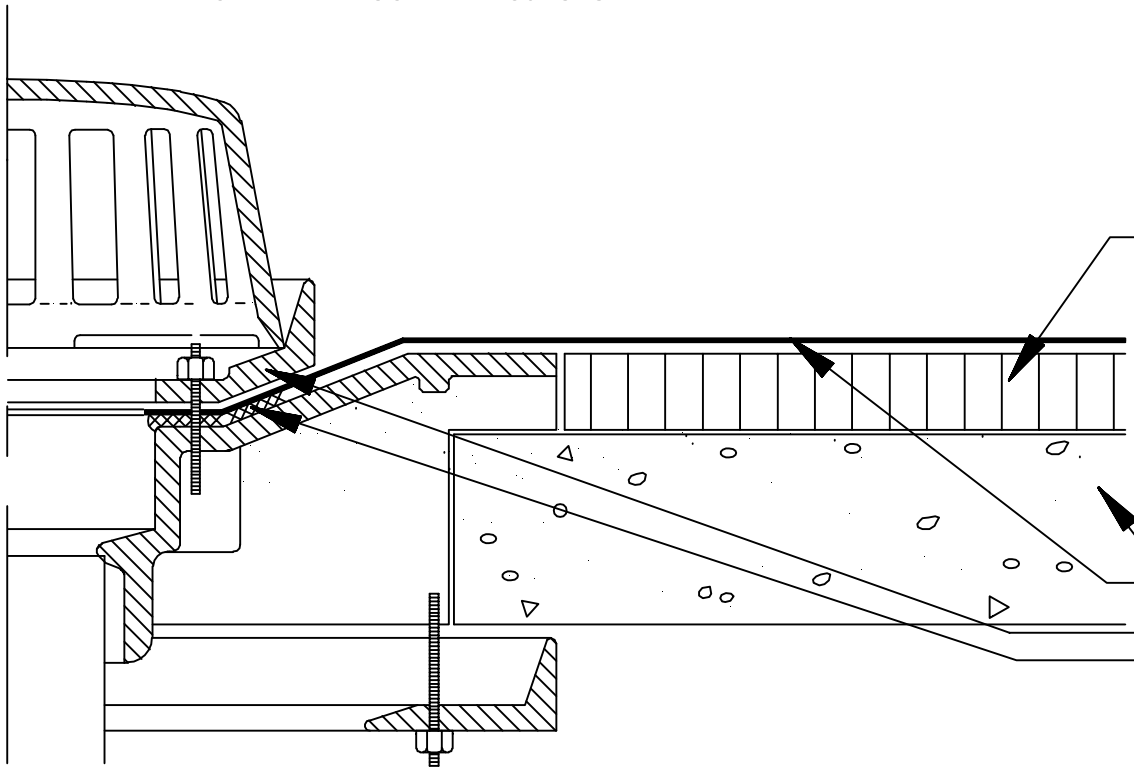

THIS DETAIL IS ACCEPTABLE FOR USE IN A 20-YEAR WARRANTED SYSTEM.

MULE-HIDE PRODUCTS CO., INC. **04/01/2004**	ROOF DRAIN	DETAIL NO.:
	SYSTEMS: ALL	MHE-130

NOTE: 1. FOR ROOF DRAIN SUMPS LESS THAN 2 INCHES INCLINE.

2. ALL LEAD AND OTHER FLASHING MUST BE REMOVED ON TEAR-OFF AND ALL RECOVER PROJECTS.

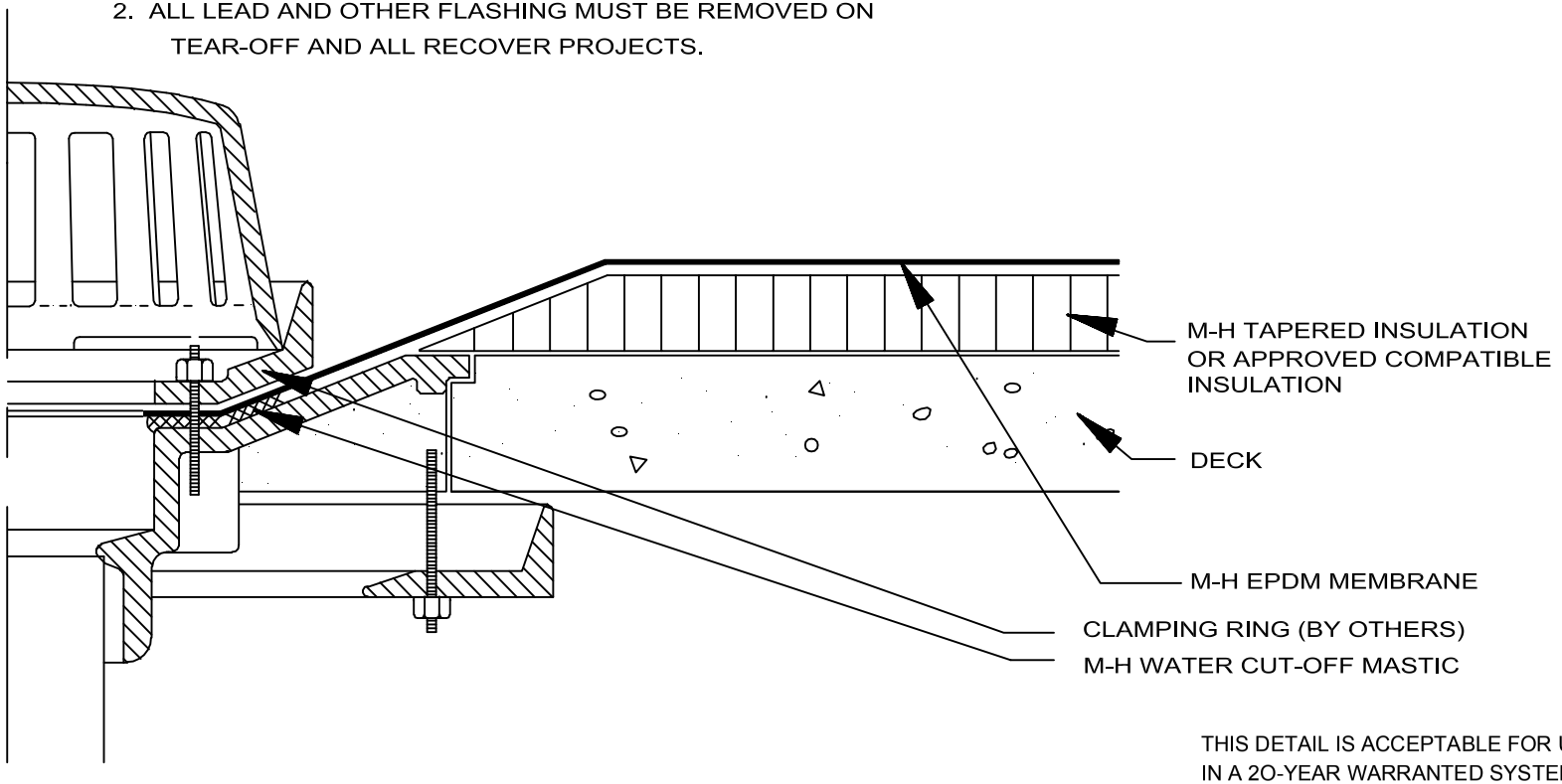

THIS DETAIL IS ACCEPTABLE FOR USE IN A 20-YEAR WARRANTED SYSTEM.

MULE-HIDE PRODUCTS CO., INC. **04/01/2004**	ROOF DRAIN W/ TAPERED INSULATION	DETAIL NO.:
	SYSTEMS: ALL	MHE-131

NOTE:
1. FOR ROOF DRAIN SUMPS LESS THAN 2" INCLINE.
2. ALL LEAD AND OTHER FLASHING MUST BE REMOVED ON TEAR-OFF AND ALL RECOVER PROJECTS.
3. IN-SEAM TAPE WITH TAPE PRIMER MAY BE SUBSTITUTED FOR SPLICE ADHESIVE (3" MIN TAPE REQUIRED)

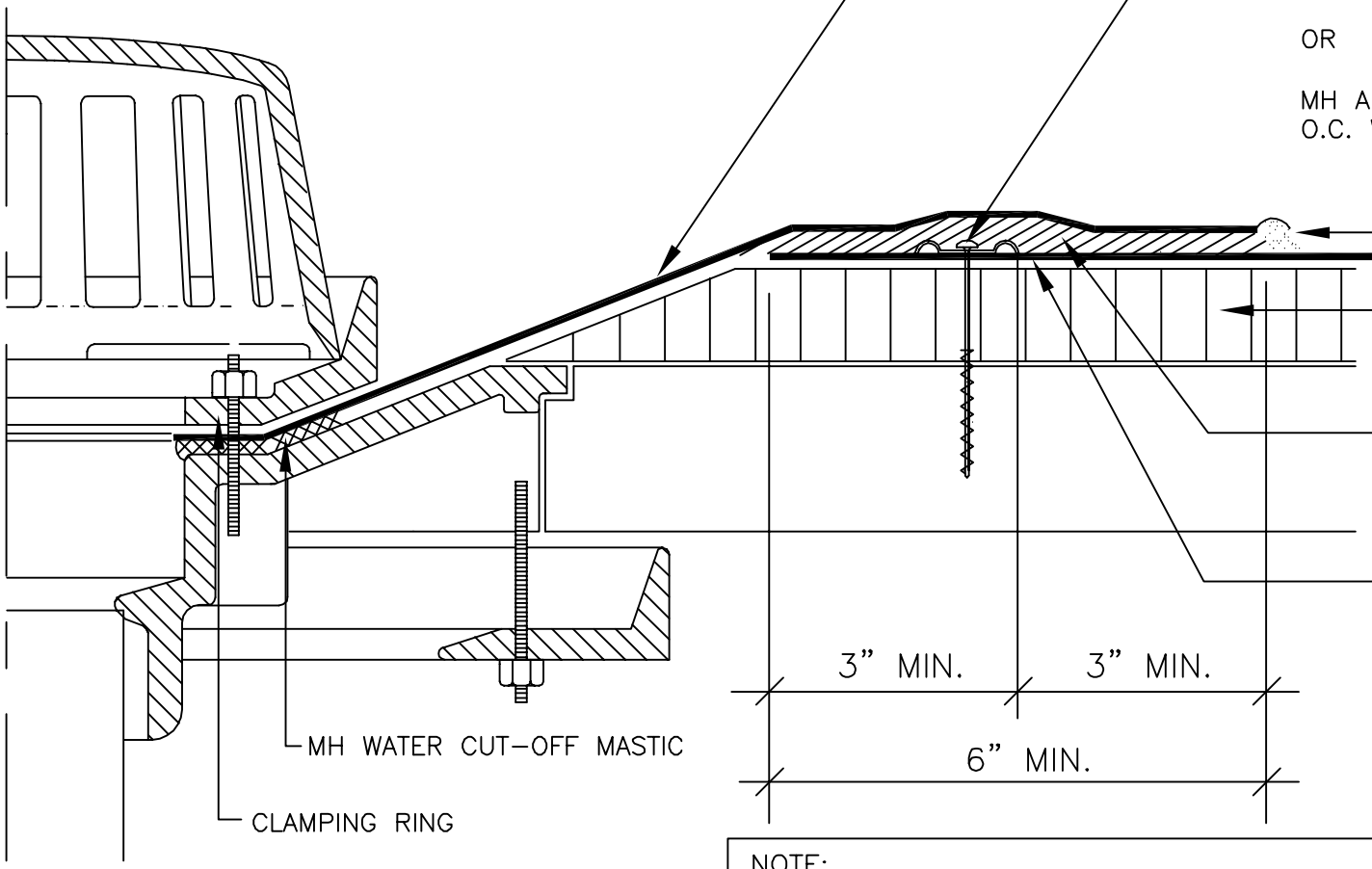

NOTE:

THIS DETAIL IS NOT ACCEPTABLE FOR A 15 OR 20 YEAR WARRANTY.

MULE-HIDE PRODUCTS CO., INC. 2010	***ROOF DRAIN WITH SUMP***	***DETAIL NO.:***
	SYSTEMS:	***MHE-132***
	ALL	

®

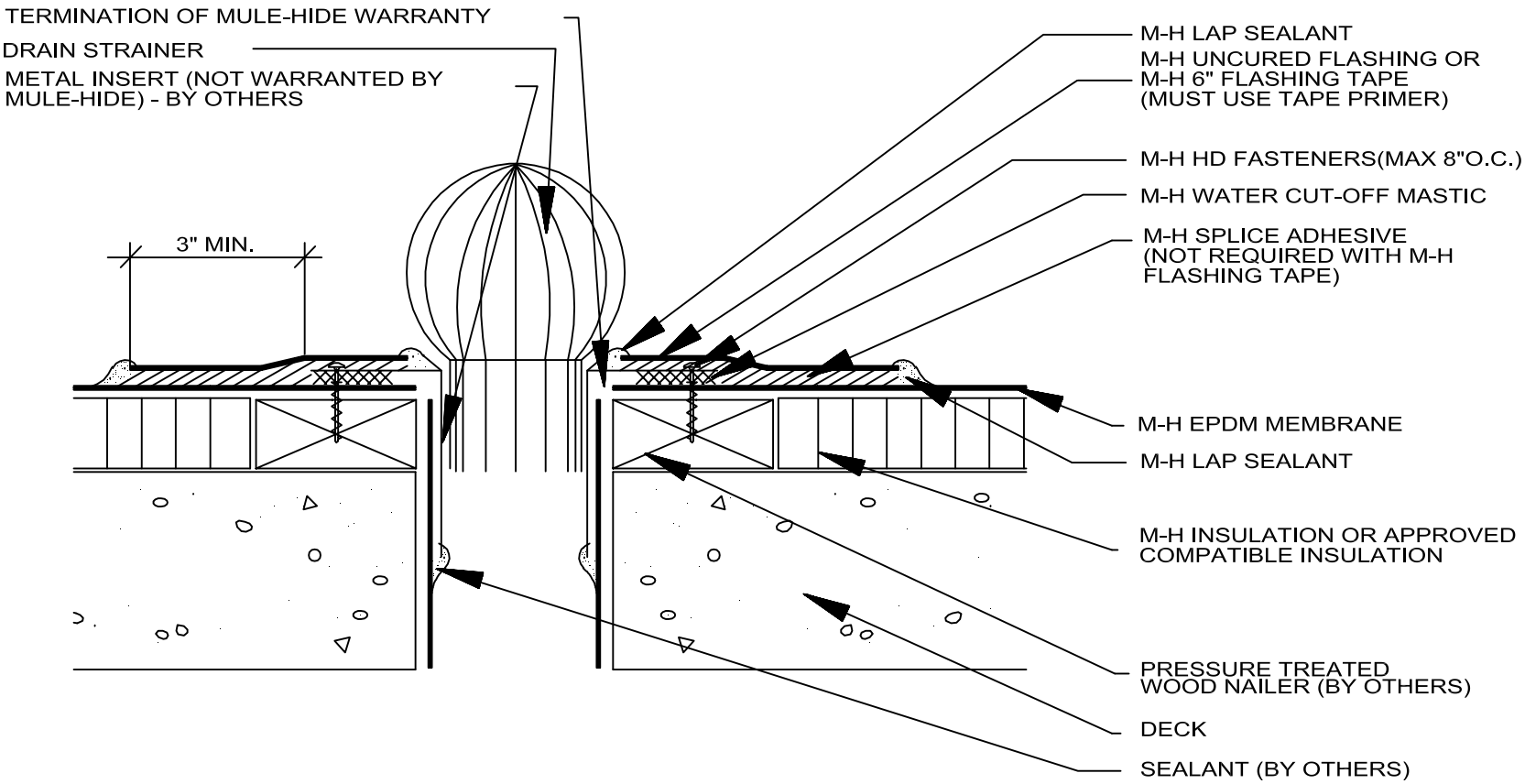

MULE-HIDE PRODUCTS CO., INC. **04/01/2004**	DRAIN INSERT	DETAIL NO.:
	SYSTEMS: ALL	MHE-133

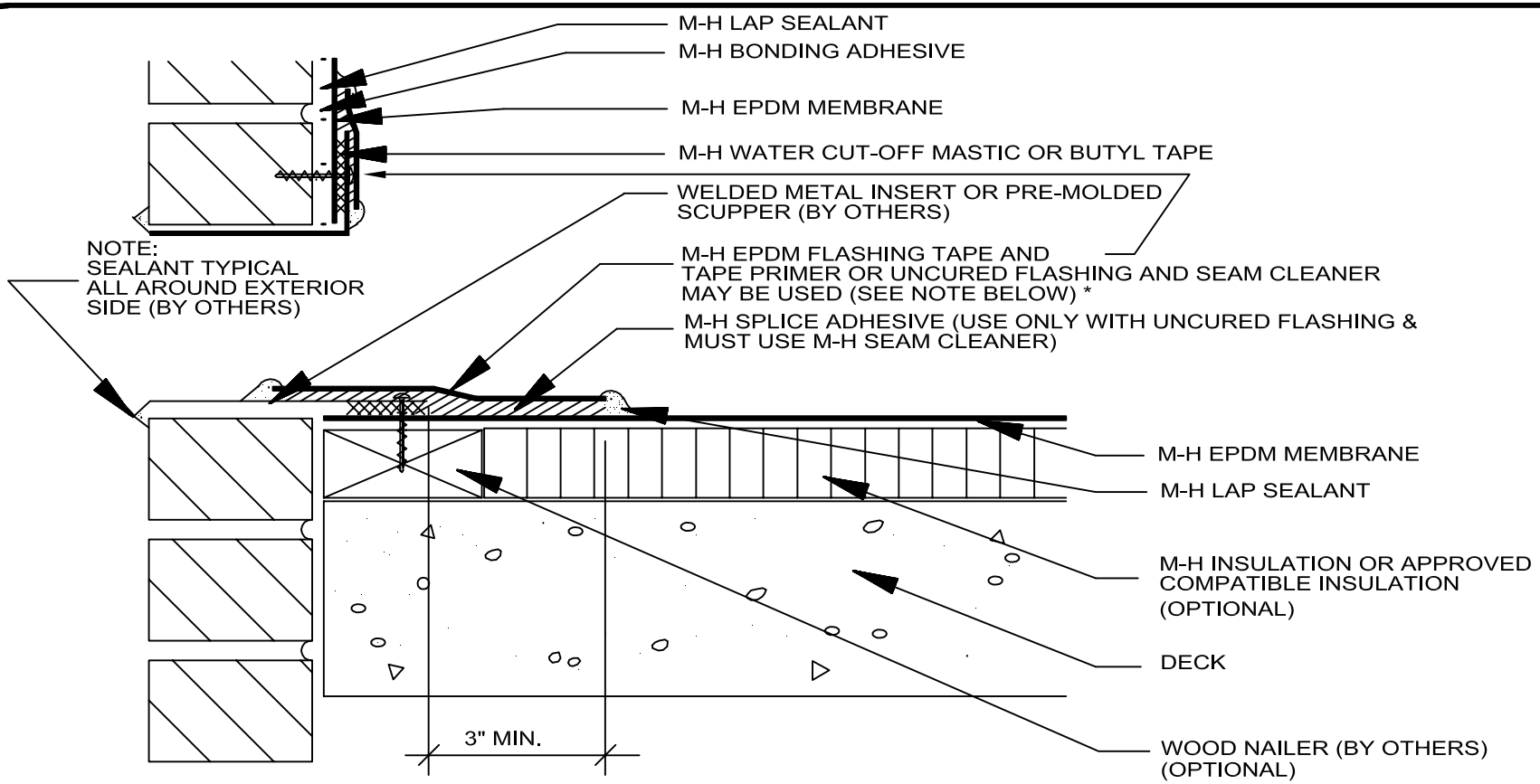

NOTE: IF THE SCUPPER HAS WELDED JOINTS THE EDGE OF THE FLANGE MAY BE STRIPPED WITH UNCURED FLASHING TAPE USING TAPE PRIMER AND 6" FLASHING TAPE

MULE-HIDE PRODUCTS CO., INC. **04/01/2004**	THROUGH WALL SCUPPER WITH METAL INSERT	DETAIL NO.: MHE-134 B
	SYSTEMS: ALL	

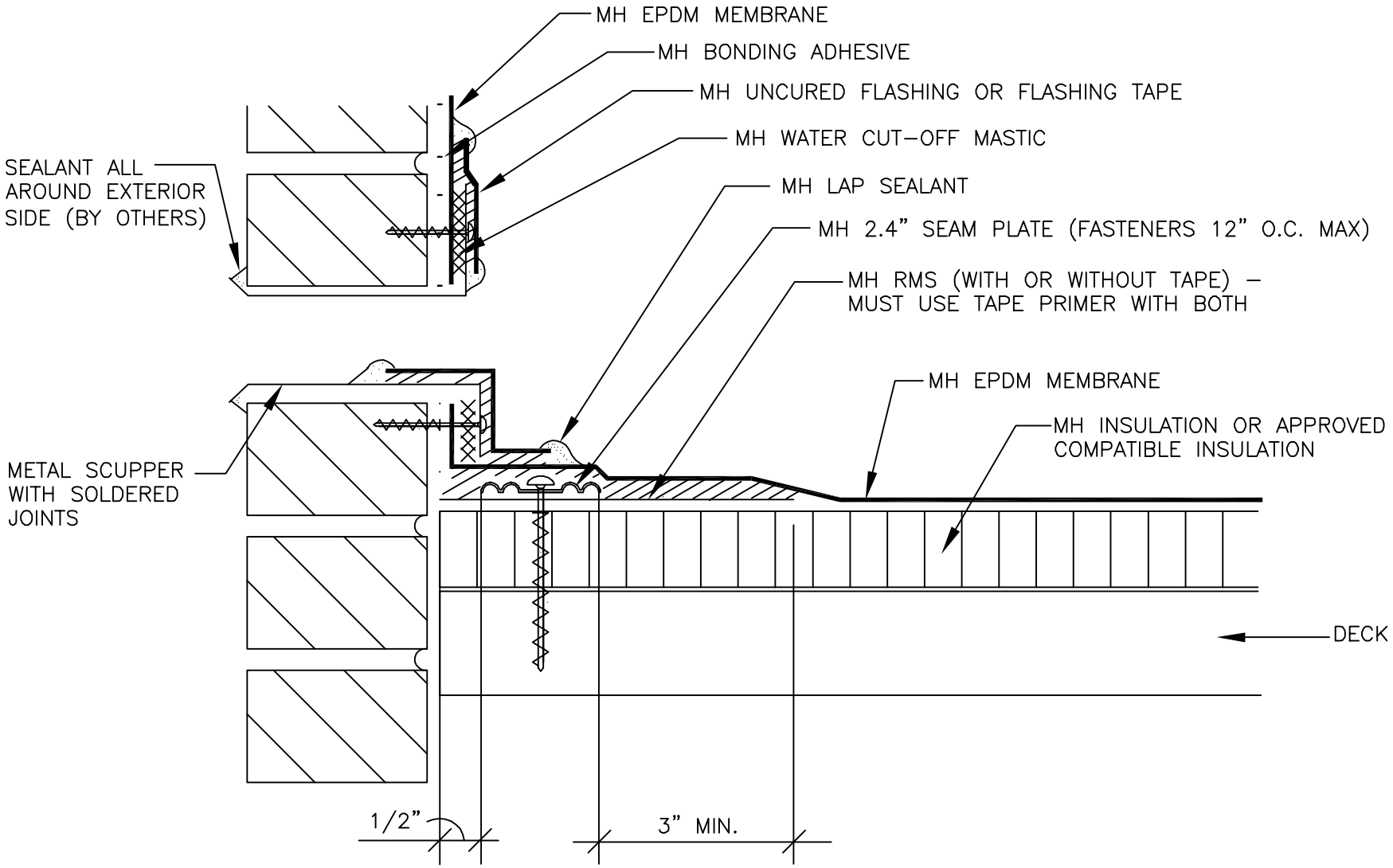

NOTE: SINGLE SEAL ADHESIVE IS NOT APPROVED ON THIS DETAIL

MULE-HIDE PRODUCTS CO., INC. 2010	***THROUGH WALL OVERFLOW SCUPPER WITH METAL INSERT***	***DETAIL NO.:***
	SYSTEMS:	***MHE-135***
	ALL	

®

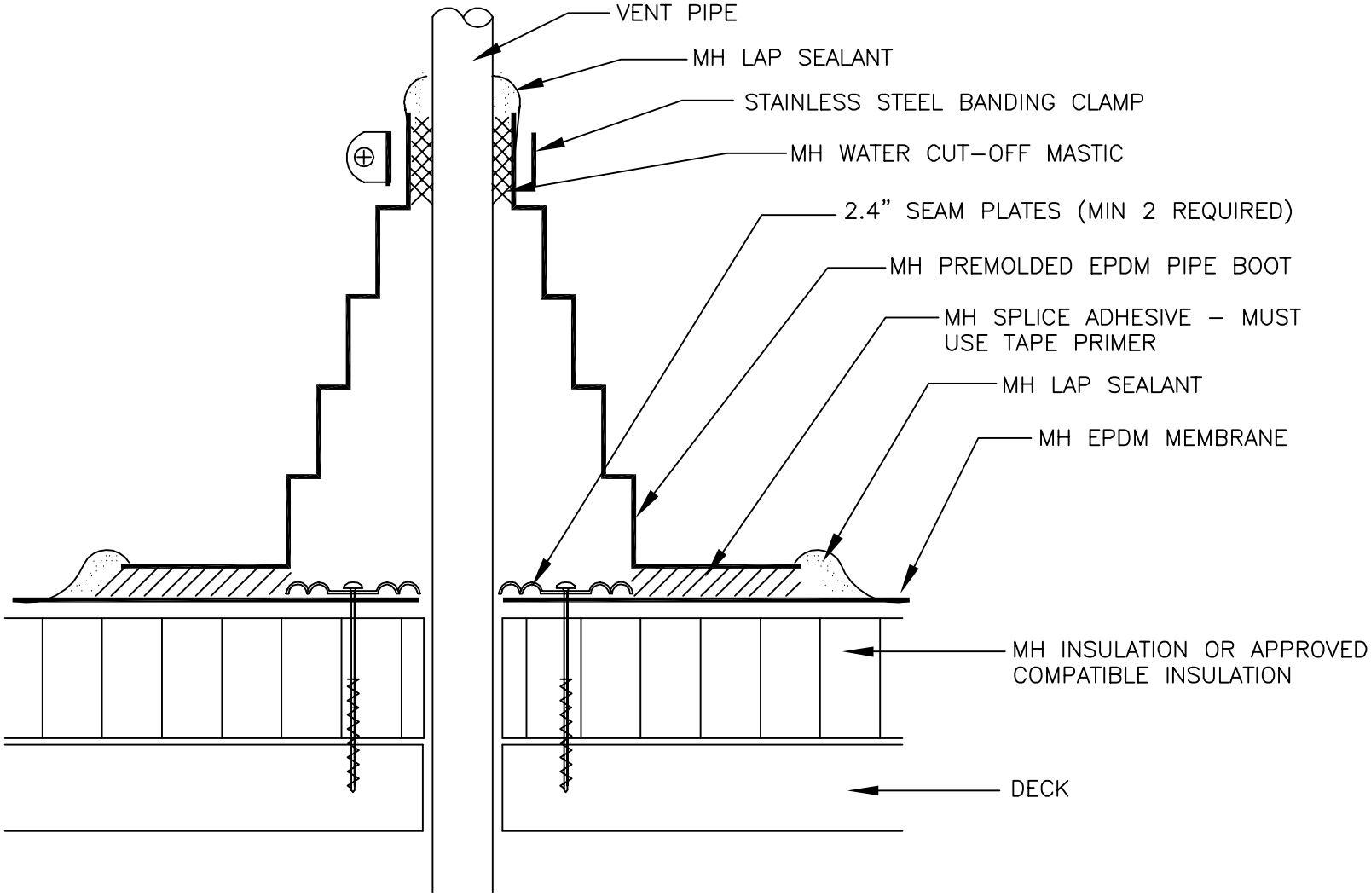

NOTE:

THIS DETAIL IS ACCEPTABLE FOR A 10 OR 15 YEAR WARRANTY.

MULE-HIDE PRODUCTS CO., INC. 2010	***PREMOLDED EPDM PIPE BOOT***	***DETAIL NO.:***
	SYSTEMS: ***MECHANICALLY ATTACHED***	***MHE-140***

®

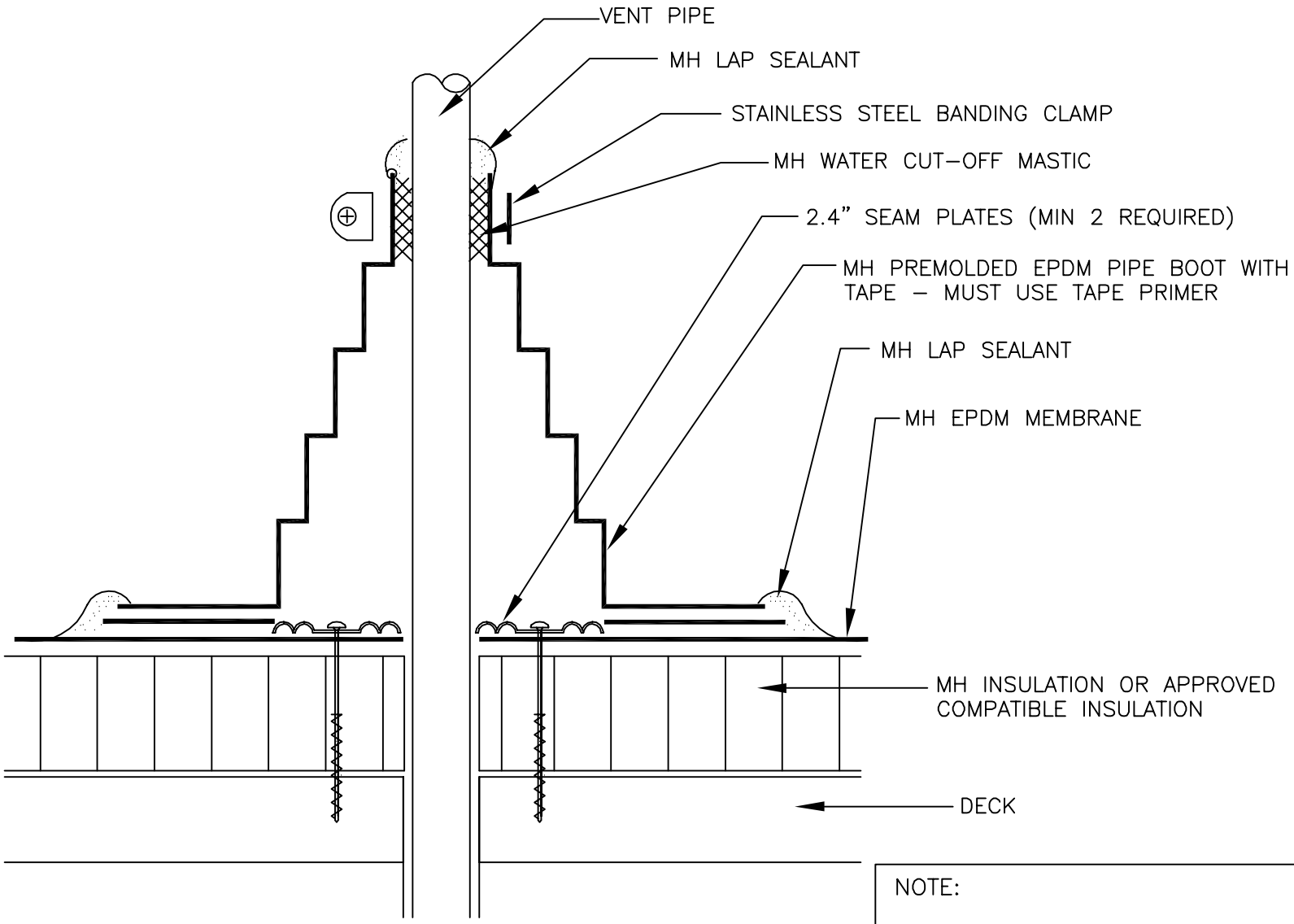

NOTE:

THIS DETAIL IS ACCEPTABLE FOR USE IN A 20–YEAR WARRANTED SYSTEM

MULE-HIDE PRODUCTS CO., INC. 2010	***PREMOLDED EPDM PIPE BOOT WITH TAPE***	***DETAIL NO.:***
	SYSTEMS:	***MHE-140A***
	MECHANICALLY FASTENED	

®

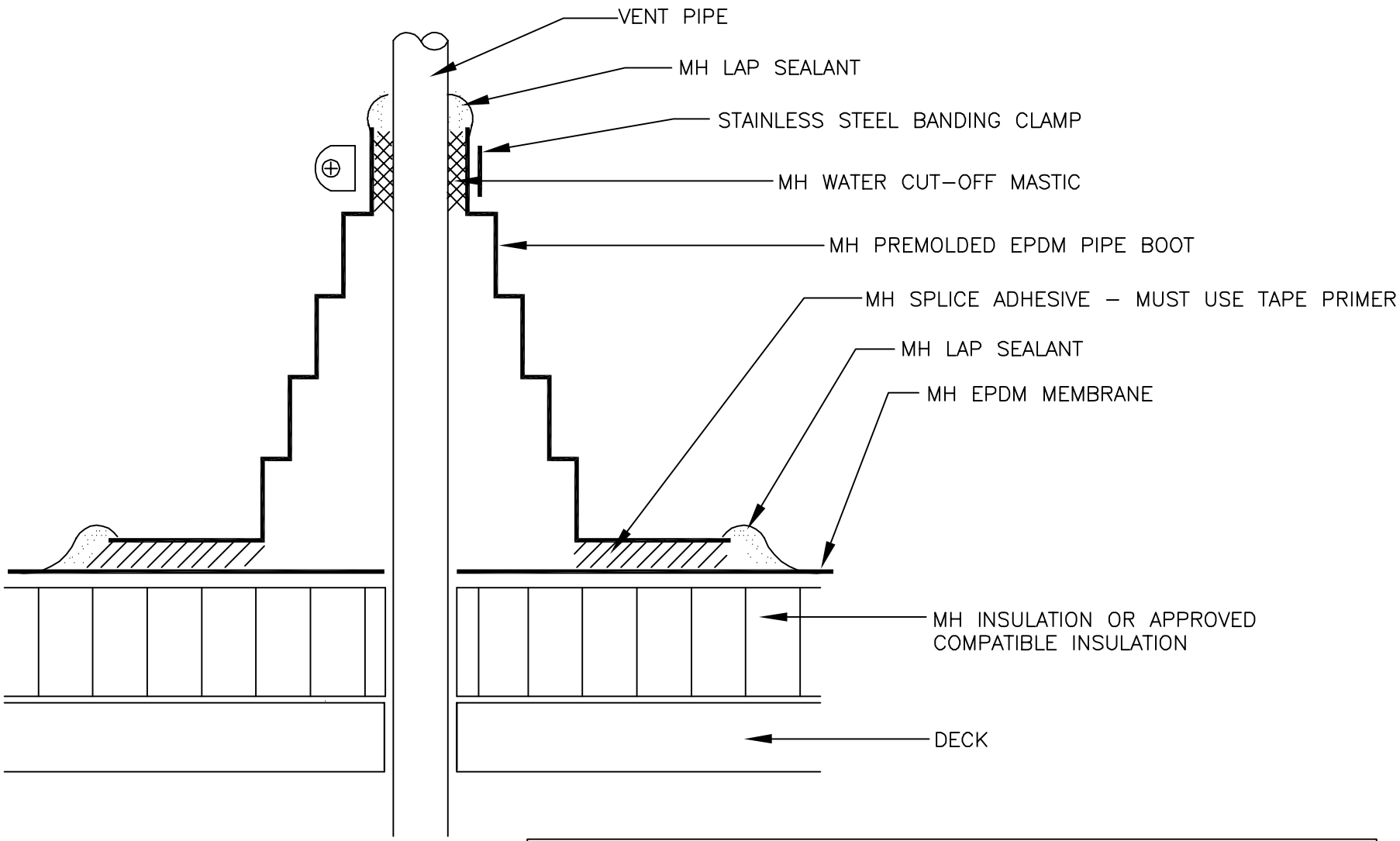

NOTE:

THIS DETAIL IS NOT ACCEPTABLE FOR A 15 OR 20 YEAR WARRANTY.

MULE-HIDE PRODUCTS CO., INC. 2010	***PREMOLDED EPDM PIPE BOOT***	***DETAIL NO.:***
	SYSTEMS: ***BALLASTED AND FULLY ADHERED***	***MHE-140B***

®

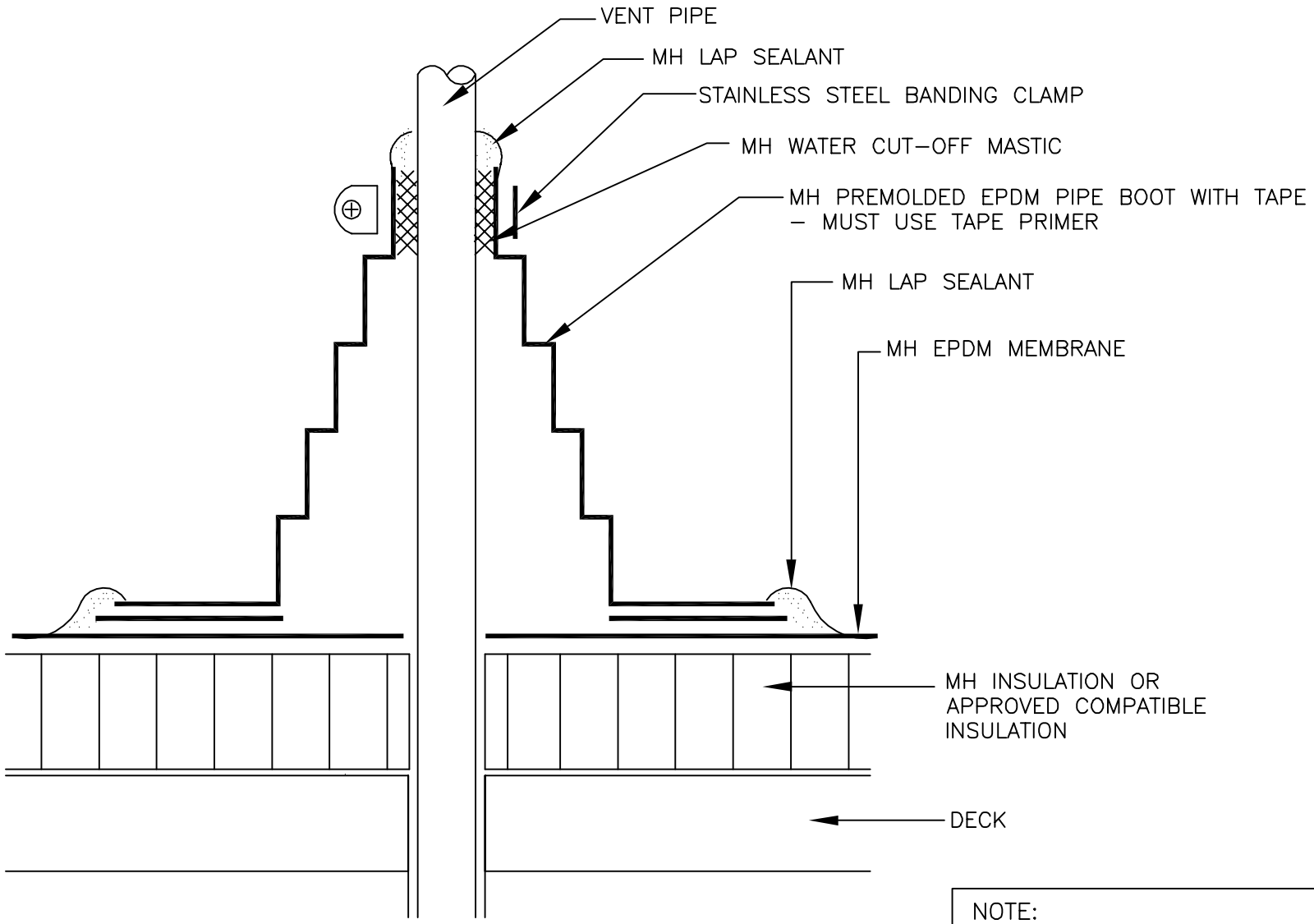

NOTE:

THIS DETAIL IS ACCEPTABLE FOR USE IN A 20-YEAR WARRANTED SYSTEM

MULE-HIDE PRODUCTS CO., INC. 2010	***PREMOLDED EPDM PIPE BOOT WITH TAPE***	***DETAIL NO.:***
	SYSTEMS:	***MHE-140C***
	BALLASTED AND FULLY ADHERED	

®

NOTE:
1. FLASHING TAPES MAY BE SUBSTITUTED FOR UNCURED EPDM FLASHING
2. MINIMUM FLASHING HEIGHT TO BE 8" WHERE POSSIBLE

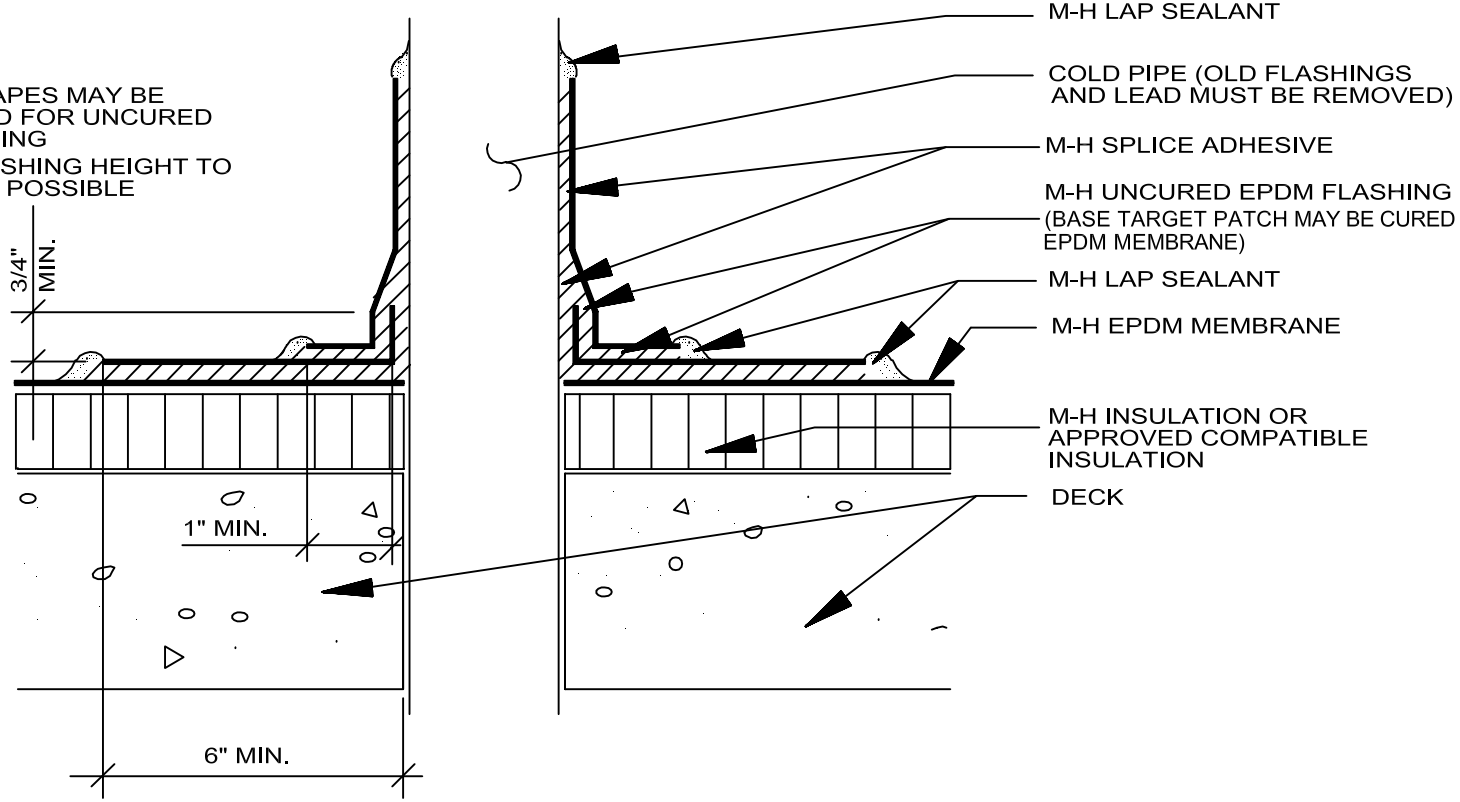

NOTE: IF USING UNCURED FLASHING, PREP EPDM MEMBRANE AND PIPE WITH SEAM CLEANER PRIOR TO APPLYING SPLICE ADHESIVE. IF USING FLASHING TAPE, PREP WITH TAPE PRIMER.

MULE-HIDE PRODUCTS CO., INC. **04/01/2004**	FIELD FABRICATED PIPE FLASHING	DETAIL NO.:
	SYSTEMS: ALL	MHE-141

NOTE:
FOR ALL PIPES OVER 6 INCHES DIAMETER
FIELD MEMBRANE MUST BE MECHANICALLY
ATTACHED AT BASE OF COLLAR

BASE TARGET PATCH MAY BE CURED
MEMBRANE OR UNCURED FLASHING

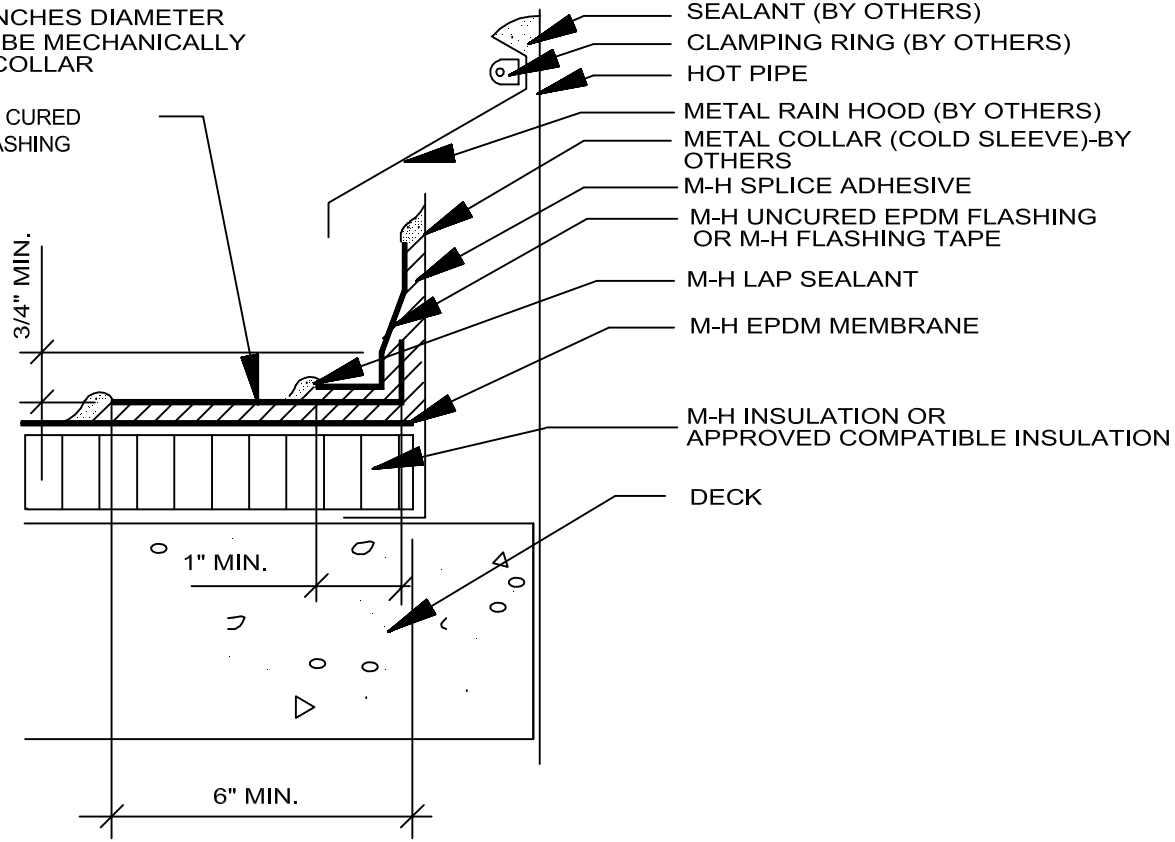

NOTE: IF USING UNCURED FLASHING, PREP EPDM MEMBRANE AND PIPE WITH SEAM CLEANER PRIOR TO APPLYING SPLICE ADHESIVE. IF USING FLASHING TAPE, PREP WITH TAPE PRIMER.

MULE-HIDE PRODUCTS CO., INC. **04/01/2004**	FIELD FABRICATED HOT PIPE	DETAIL NO.:
	SYSTEMS: ALL	MHE-142

NOTE: WOOD NAILER MAY BE REQUIRED UNDER PITCH PAN FLANGE WHEN PITCH PANS ARE GREATER THAN 12" X 12"

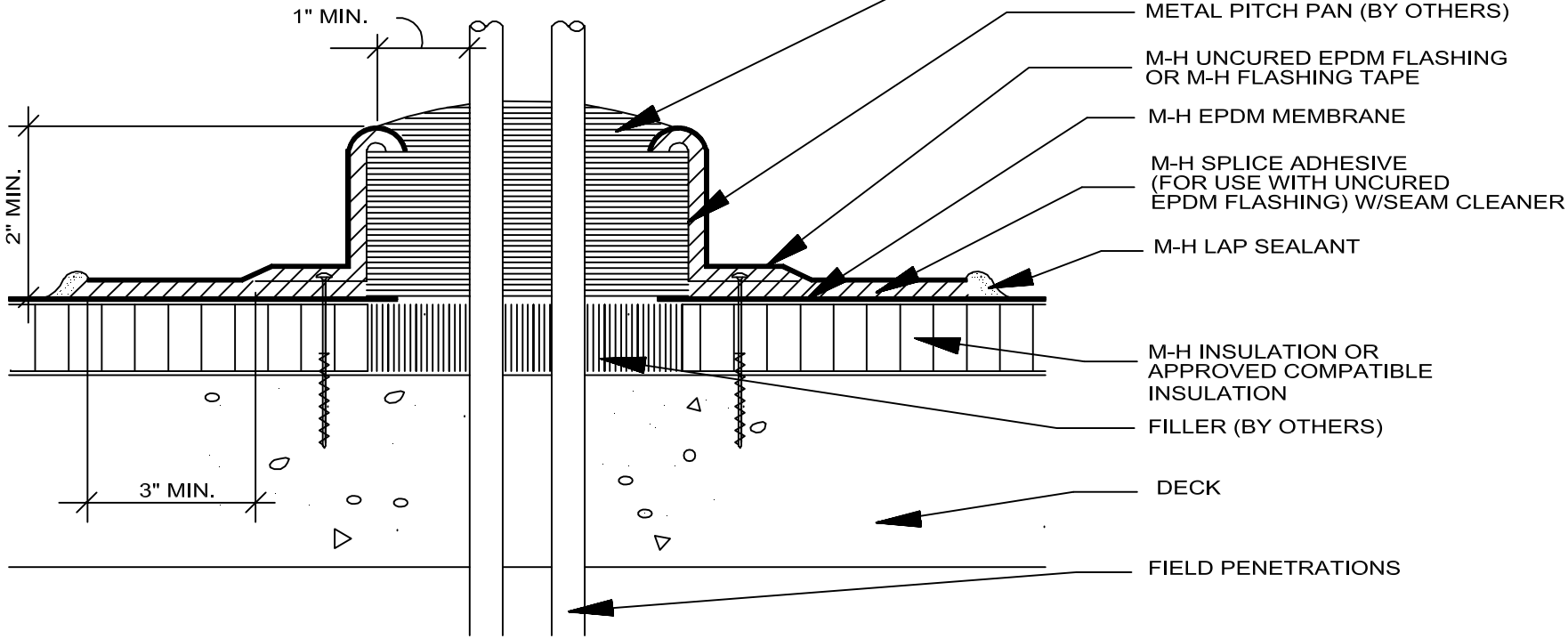

NOTE: IF USING FLASHING TAPE, APPLY TAPE PRIMER TO BOTH EPDM MEMBRANE, TOP SURFACES OF FLASHING TAPE (FOR OVERLAPS) AND METAL PRIOR TO APPLYING FLASHING TAPE.

MULE-HIDE PRODUCTS CO., INC. **04/01/2004**	FIELD FABRICATED PITCH PAN	DETAIL NO.:
	SYSTEMS: ALL	MHE-143

NOTE: ALL POURABLE SEALER POCKETS GREATER THAN 12 INCHES IN DIAMETER WILL REQUIRE MEMBRANE SECUREMENT

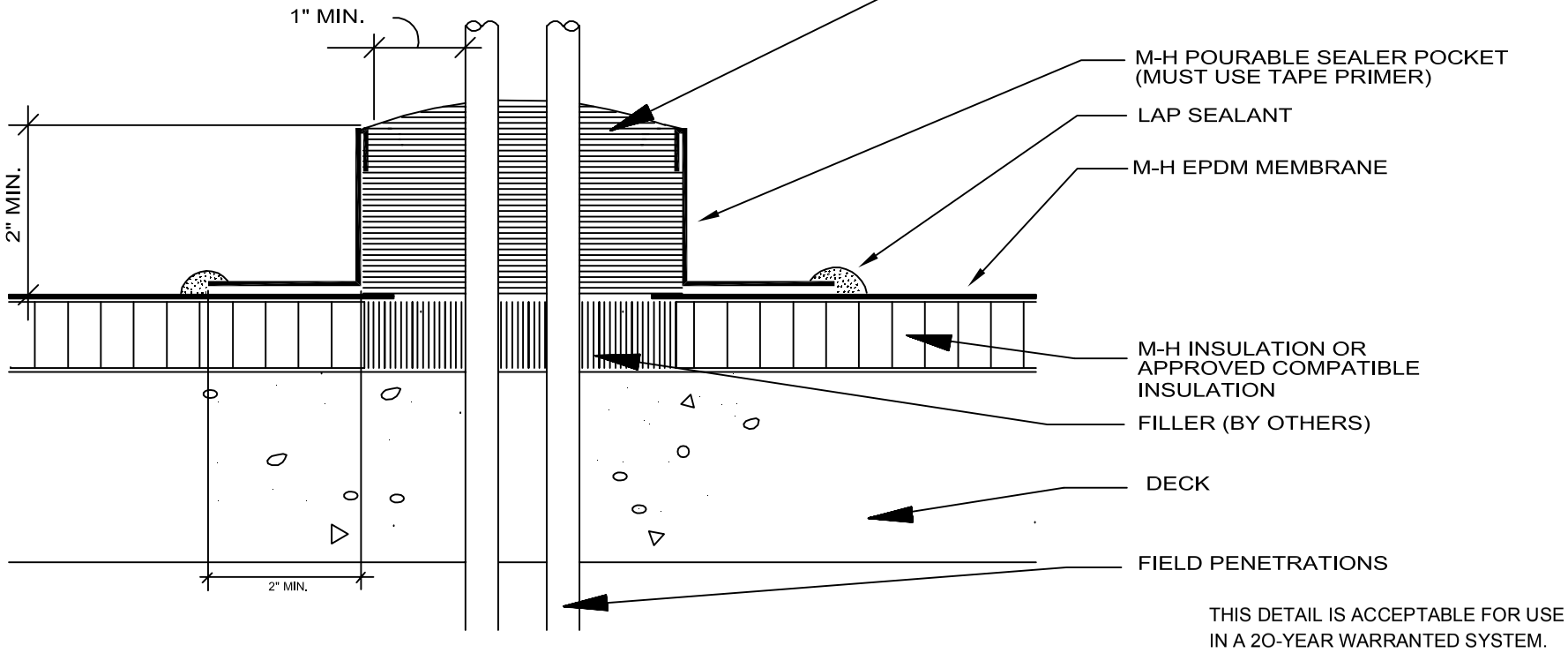

THIS DETAIL IS ACCEPTABLE FOR USE IN A 20-YEAR WARRANTED SYSTEM.

DO NOT INSTALL AGAINST A HOT PIPE OF 180 DEGREES FAHRENHEIT OR HIGHER.
POURABLE SEALER MUST CONTACT BARE SURFACE OF THE PENETRATION.

MULE-HIDE PRODUCTS CO., INC. **04/01/2004**	POURABLE SEALER POCKET	DETAIL NO.:
	SYSTEMS: ALL	MHE-144

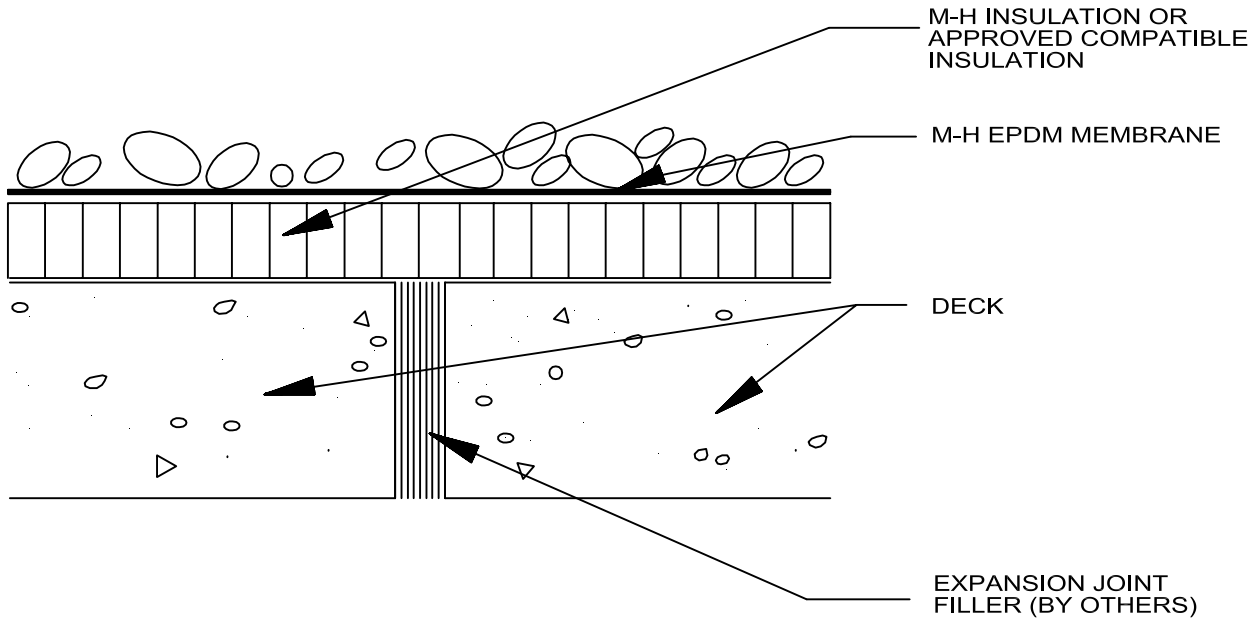

THIS DETAIL IS ACCEPTABLE FOR USE
IN A 20-YEAR WARRANTED SYSTEM.

MULE-HIDE PRODUCTS CO., INC. **04/01/2004**	EXPANSION JOINT FIELD JOINT	DETAIL NO.:
	SYSTEMS: BALLAST ONLY	MHE-150

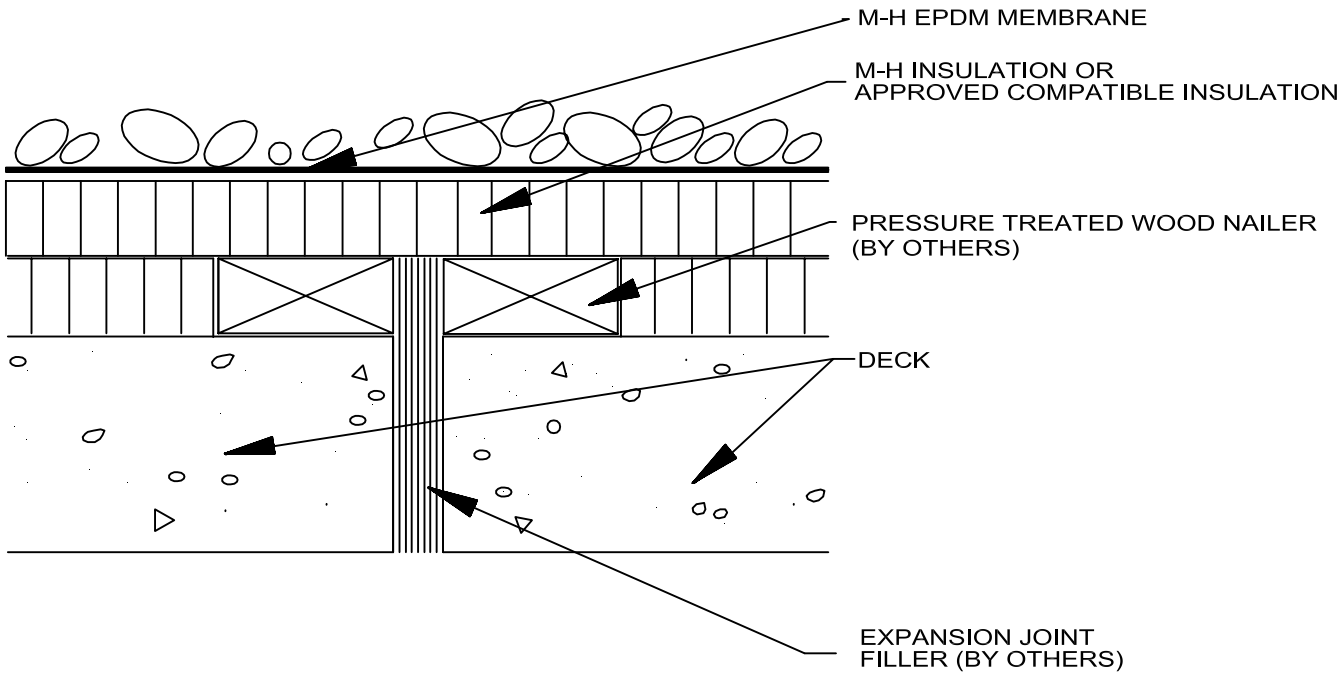

THIS DETAIL IS ACCEPTABLE FOR USE
IN A 20-YEAR WARRANTED SYSTEM.

MULE-HIDE PRODUCTS CO., INC. **04/01/2004**	EXPANSION JOINT EXISTING FIELD JOINT "A"	DETAIL NO.: MHE-151
	SYSTEMS: BALLAST ONLY	

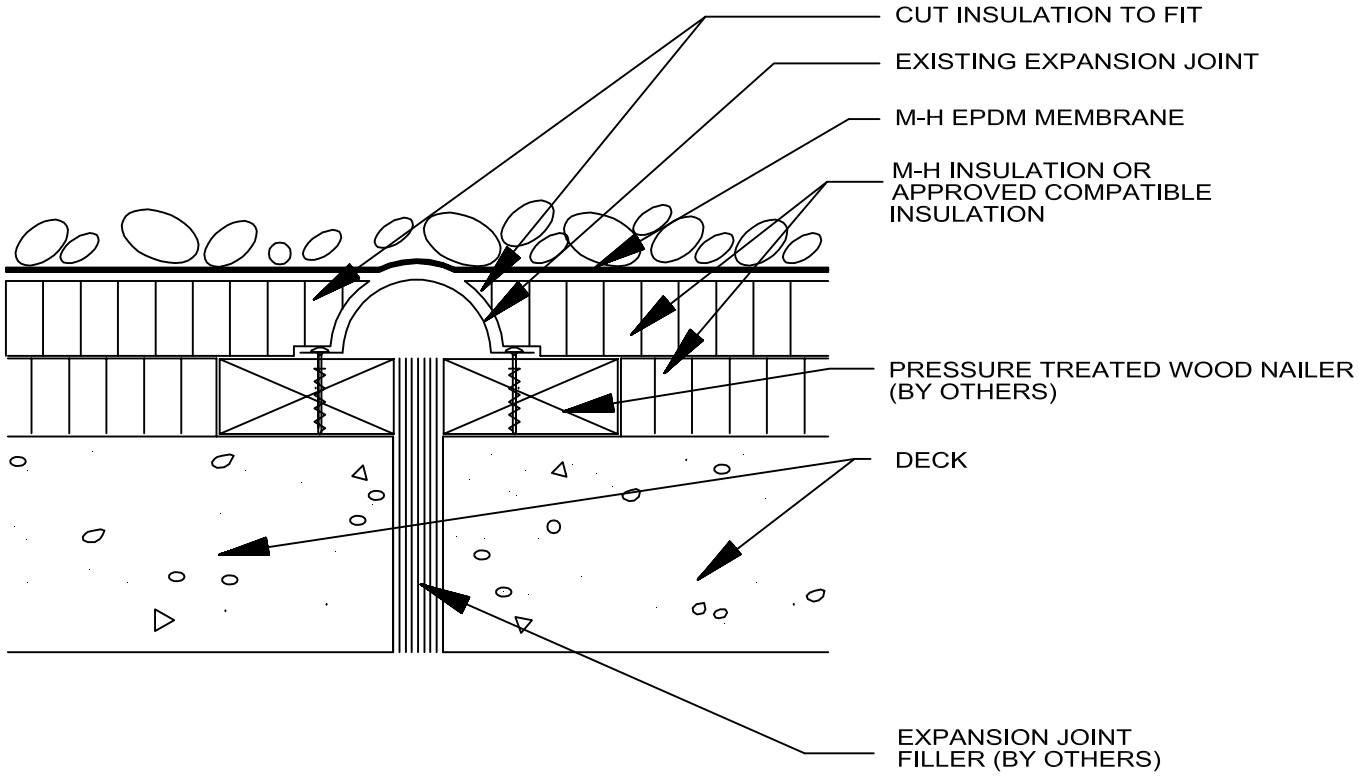

THIS DETAIL IS ACCEPTABLE FOR USE
IN A 20-YEAR WARRANTED SYSTEM.

MULE-HIDE PRODUCTS CO., INC. **04/01/2004**	EXPANSION JOINT EXISTING FIELD JOINT "B"	DETAIL NO.: MHE-152
	SYSTEMS: BALLAST ONLY	

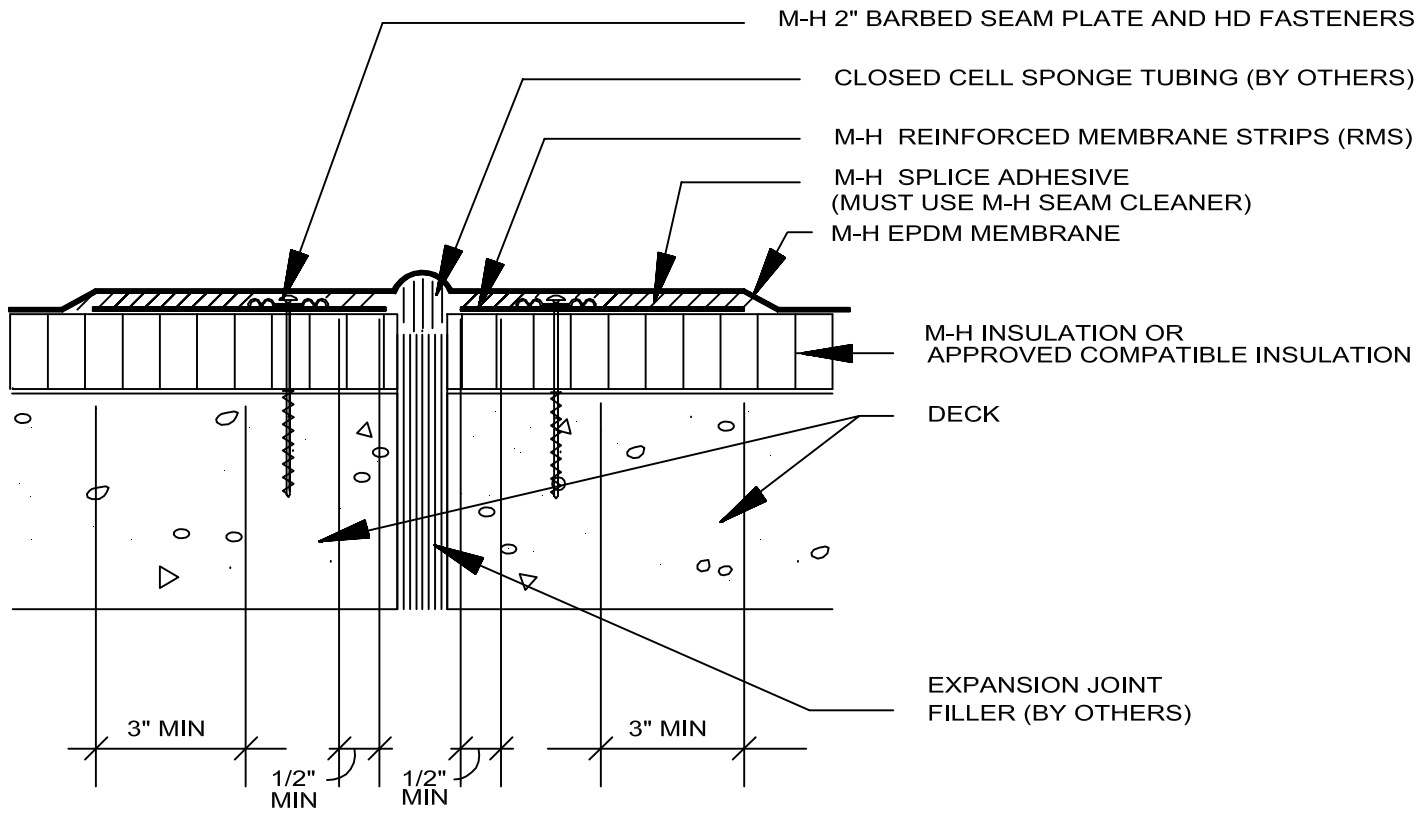

MULE-HIDE PRODUCTS CO., INC. **04/01/2004**	EXPANSION JOINT FIELD JOINT	DETAIL NO.:
	SYSTEMS: ADHERED & MECHANICAL ATTACHED	MHE-153A

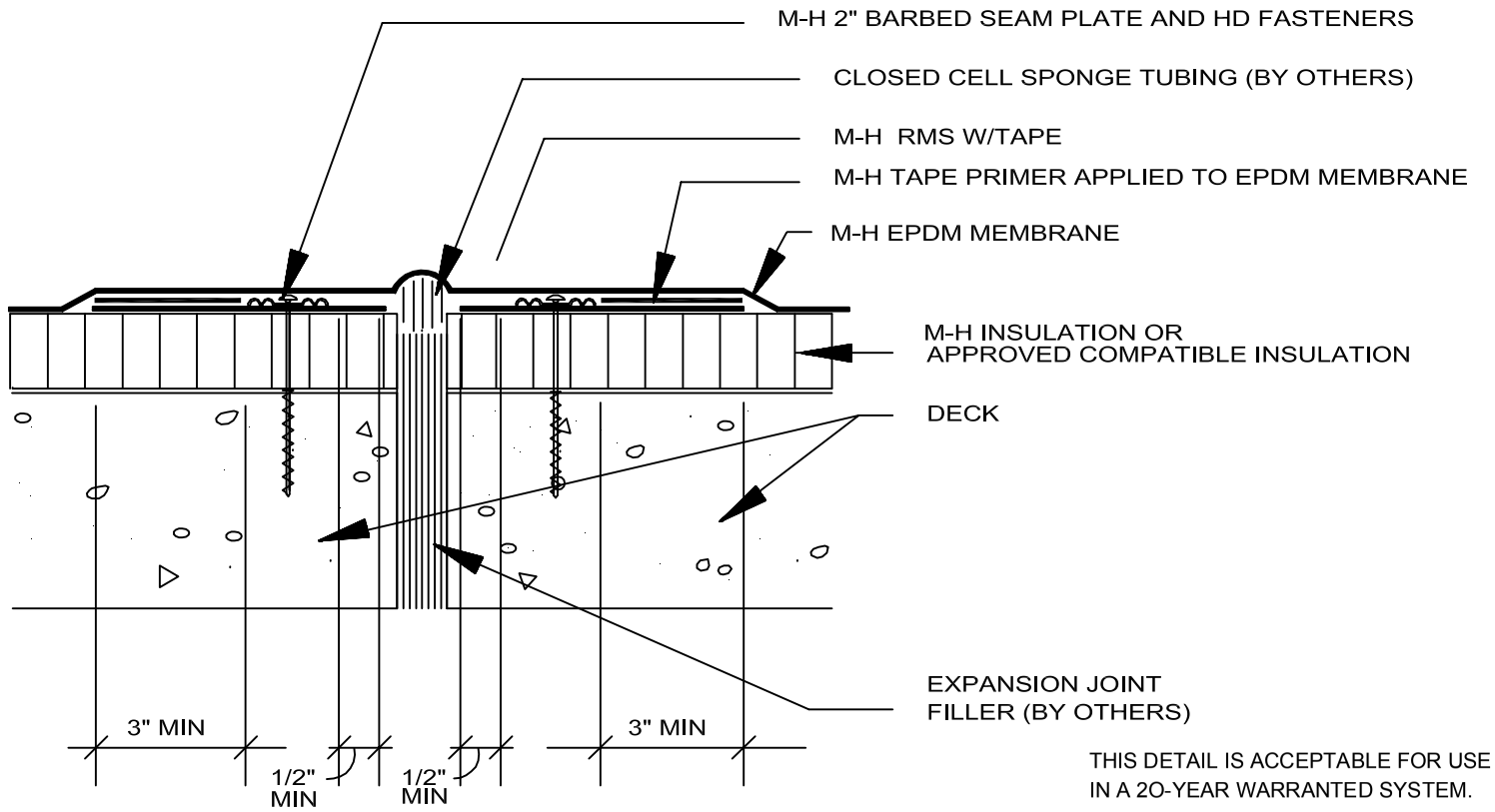

THIS DETAIL IS ACCEPTABLE FOR USE IN A 20-YEAR WARRANTED SYSTEM.

MULE-HIDE PRODUCTS CO., INC. 04/01/2004	EXPANSION JOINT FIELD JOINT	DETAIL NO.:
	SYSTEMS: ADHERED & MECHANICAL ATTACHED	MHE-153B

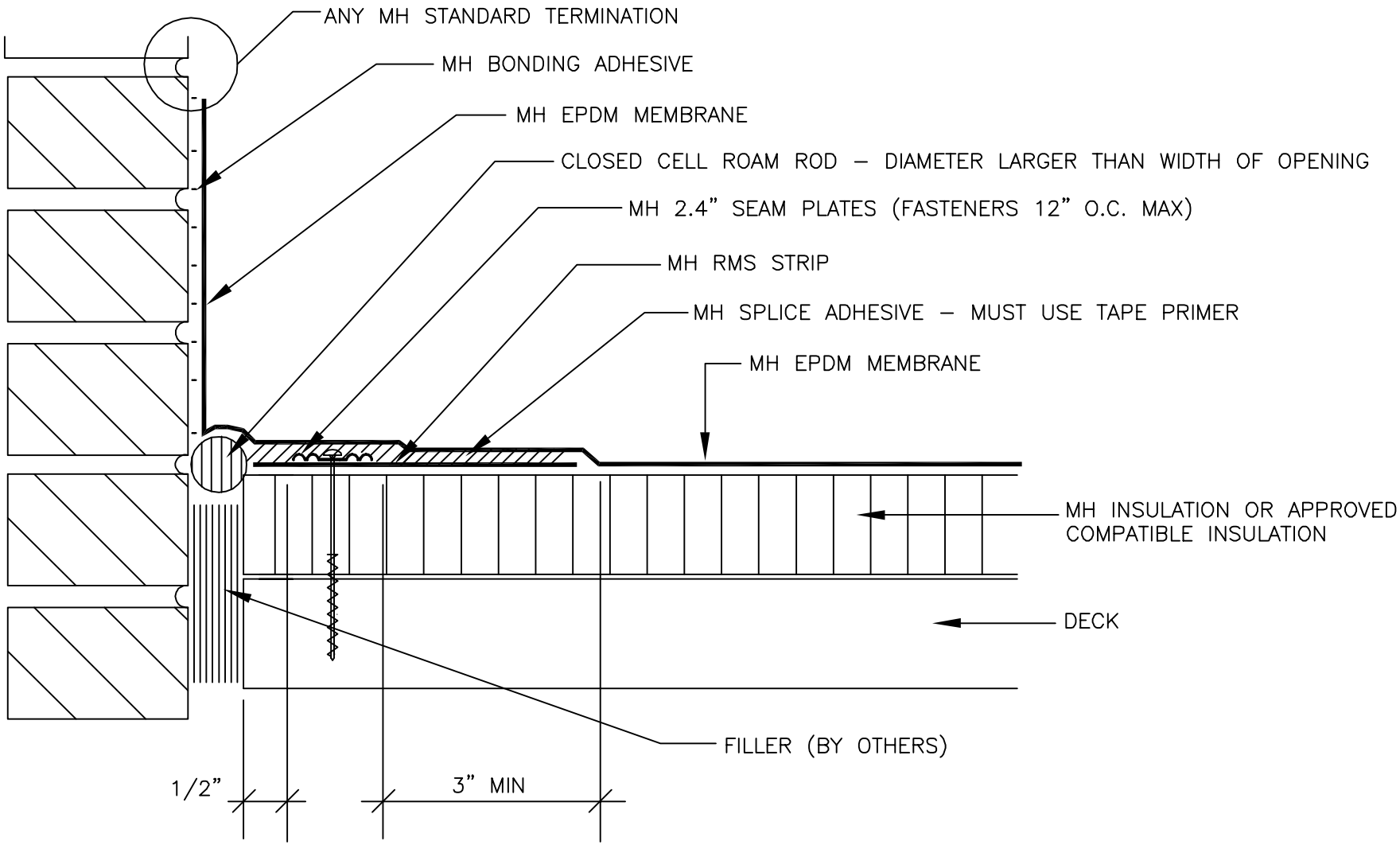

MULE-HIDE PRODUCTS CO., INC. 2010	***EXPANSION JOINT DECK TO WALL JOINT***	***DETAIL NO.:***
	SYSTEMS:	***MHE-154***
	ALL	

®

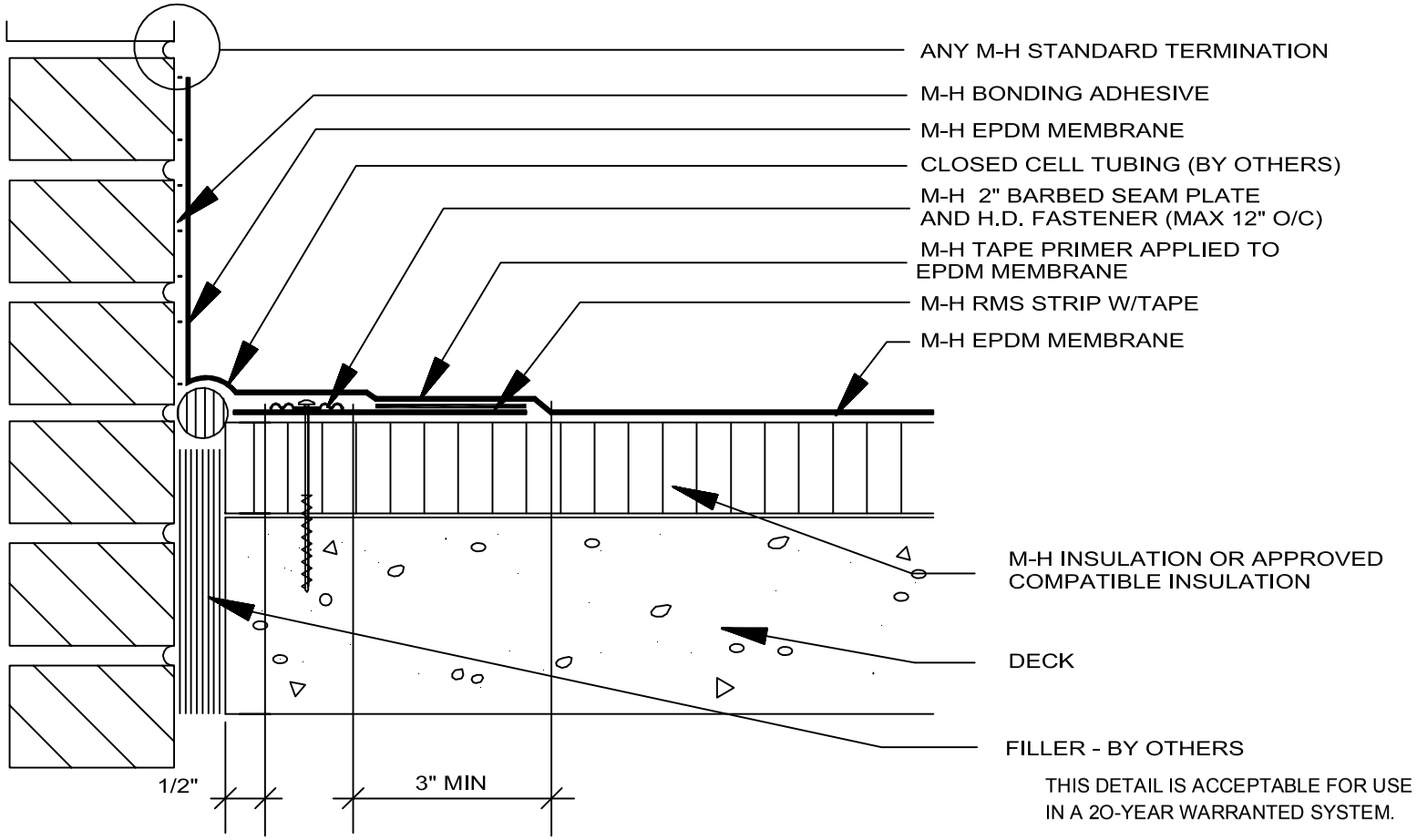

THIS DETAIL IS ACCEPTABLE FOR USE
IN A 2O-YEAR WARRANTED SYSTEM.

MULE-HIDE PRODUCTS CO., INC. **04/01/2004**	EXPANSION JOINT DECK TO WALL JOINT - "A" SYSTEMS: ALL	DETAIL NO.: MHE-154B

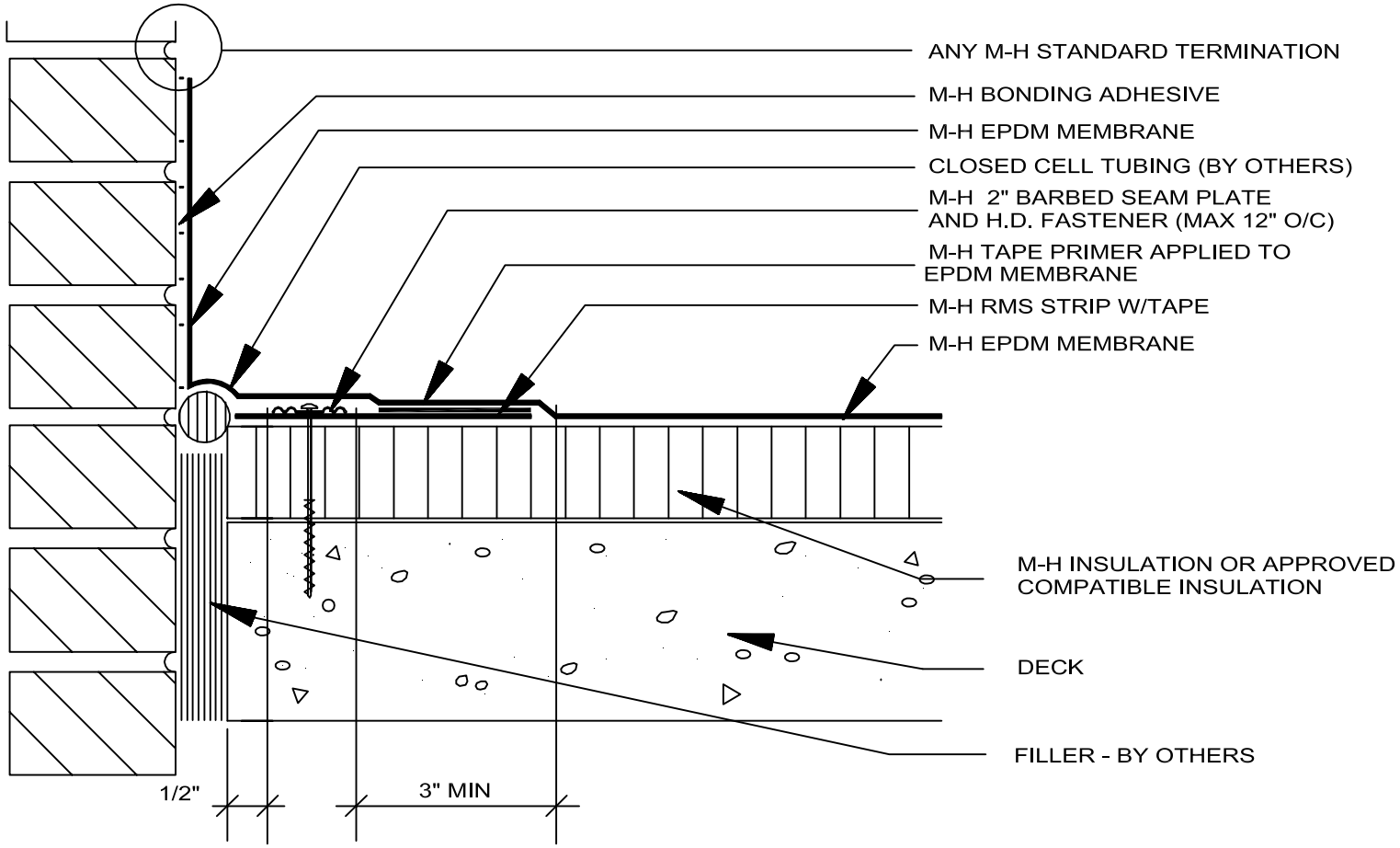

MULE-HIDE PRODUCTS CO., INC. **04/01/2004**	EXPANSION JOINT DECK TO WALL JOINT - "A" SYSTEMS: ALL	DETAIL NO.: MHE-154B

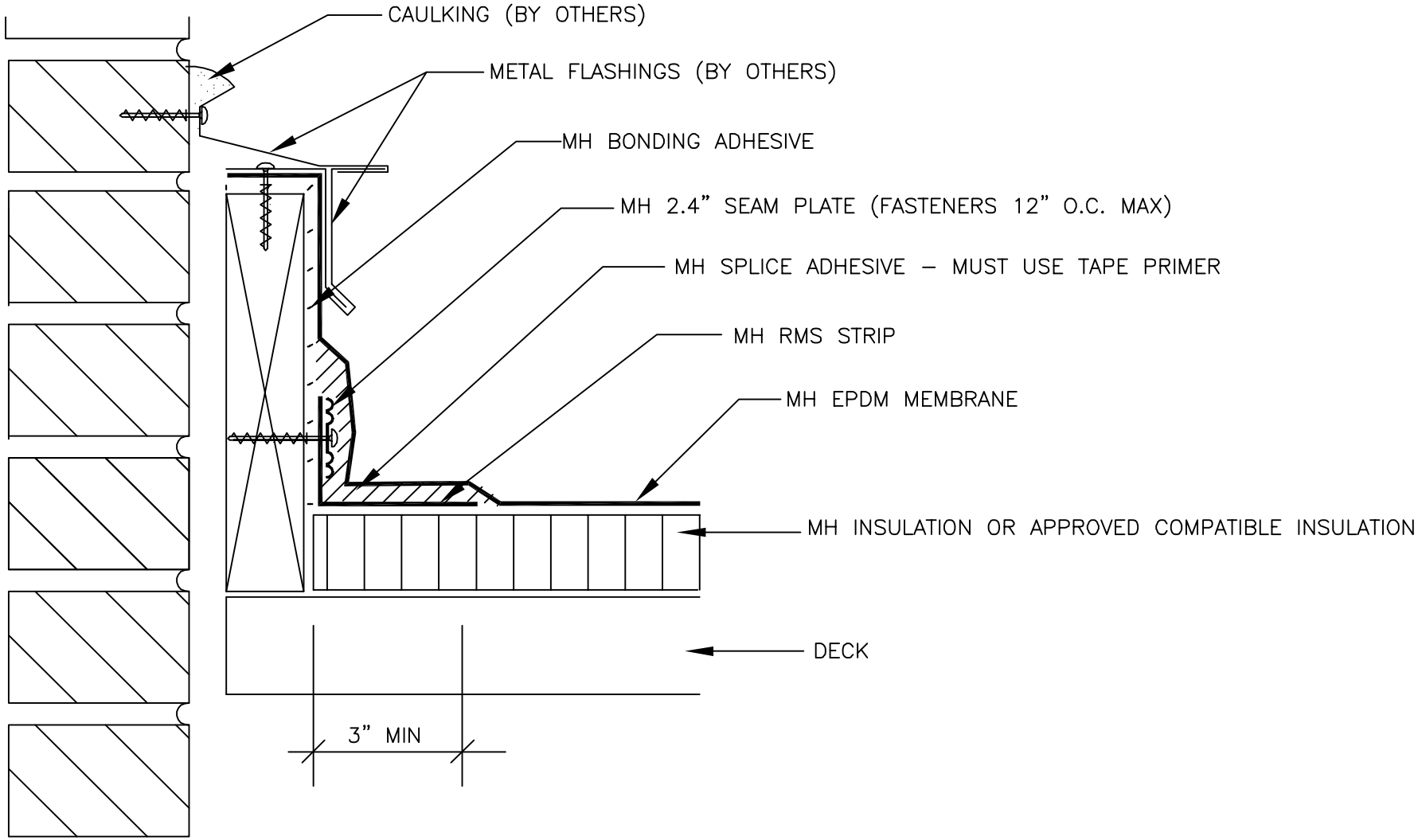

MULE-HIDE PRODUCTS CO., INC. 2010	***EXPANSION JOINT DECK TO WALL JOINT***	***DETAIL NO.:***
	SYSTEMS:	***MHE-155***
	ALL	

®

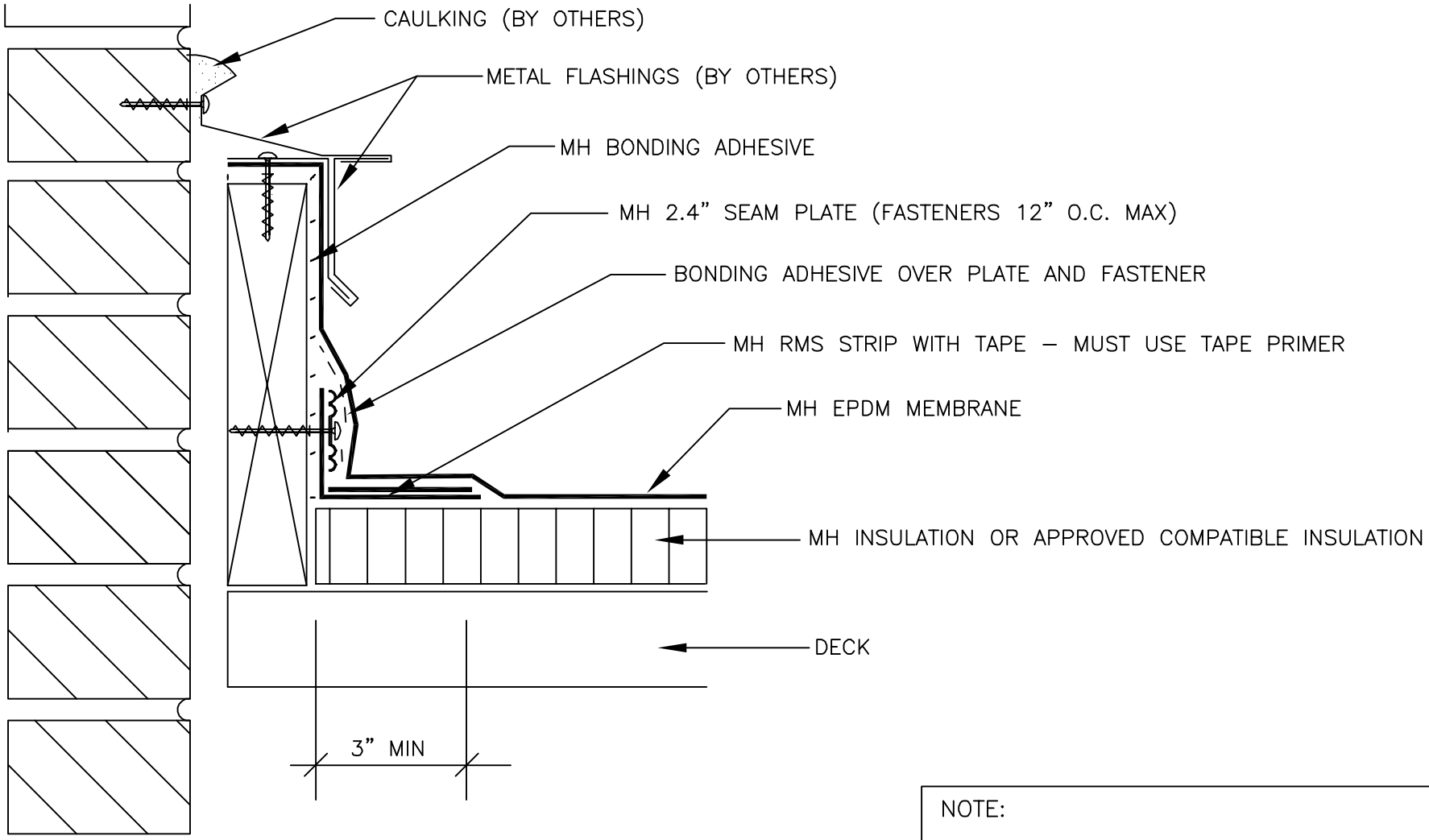

NOTE:

THIS DETAIL IS ACCEPTABLE FOR USE IN A 20–YEAR WARRANTED SYSTEM

MULE-HIDE PRODUCTS CO., INC. 2010	***EXPANSION JOINT DECK TO WALL JOINT***	***DETAIL NO.:***
	SYSTEMS:	***MHE-155A***
	ALL	

®

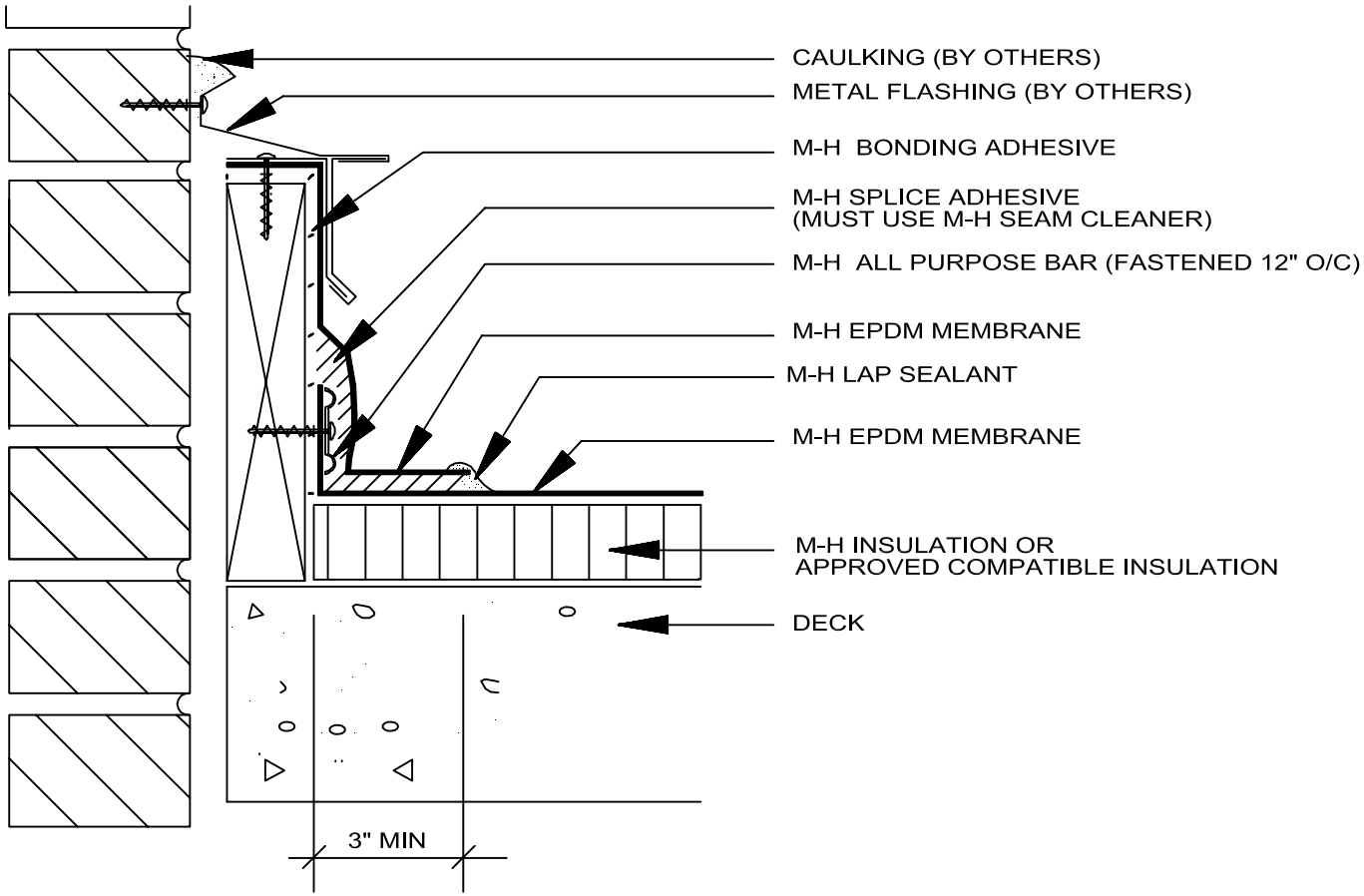

MULE-HIDE PRODUCTS CO., INC. **04/01/2004**	EXPANSION JOINT DECK TO WALL JOINT - "C" SYSTEMS: ALL	DETAIL NO.: MHE-156A

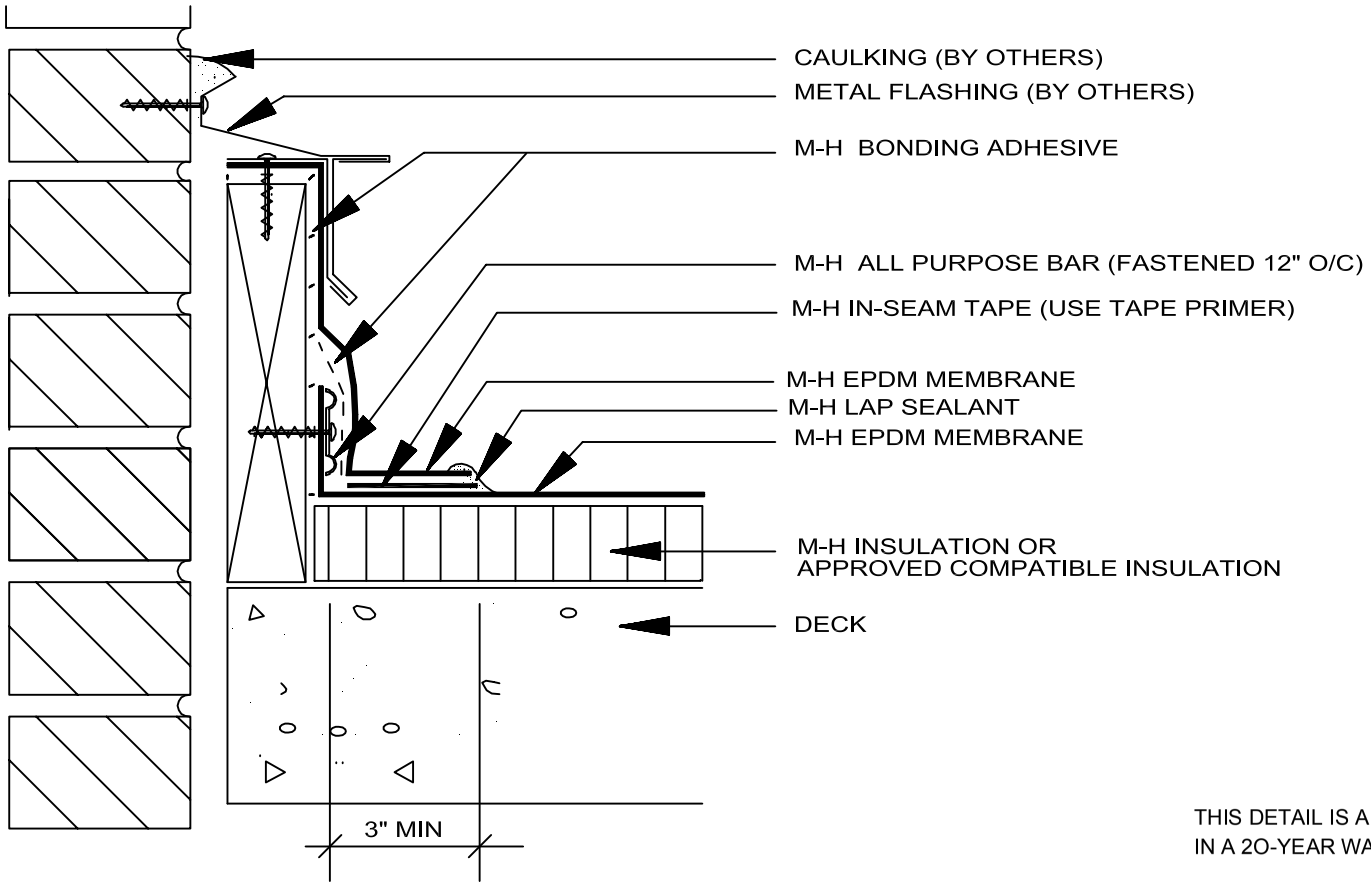

THIS DETAIL IS ACCEPTABLE FOR USE
IN A 20-YEAR WARRANTED SYSTEM.

MULE-HIDE PRODUCTS CO., INC. **04/01/2004**	EXPANSION JOINT DECK TO WALL JOINT - "C" SYSTEMS: ALL	DETAIL NO.: MHE-156B

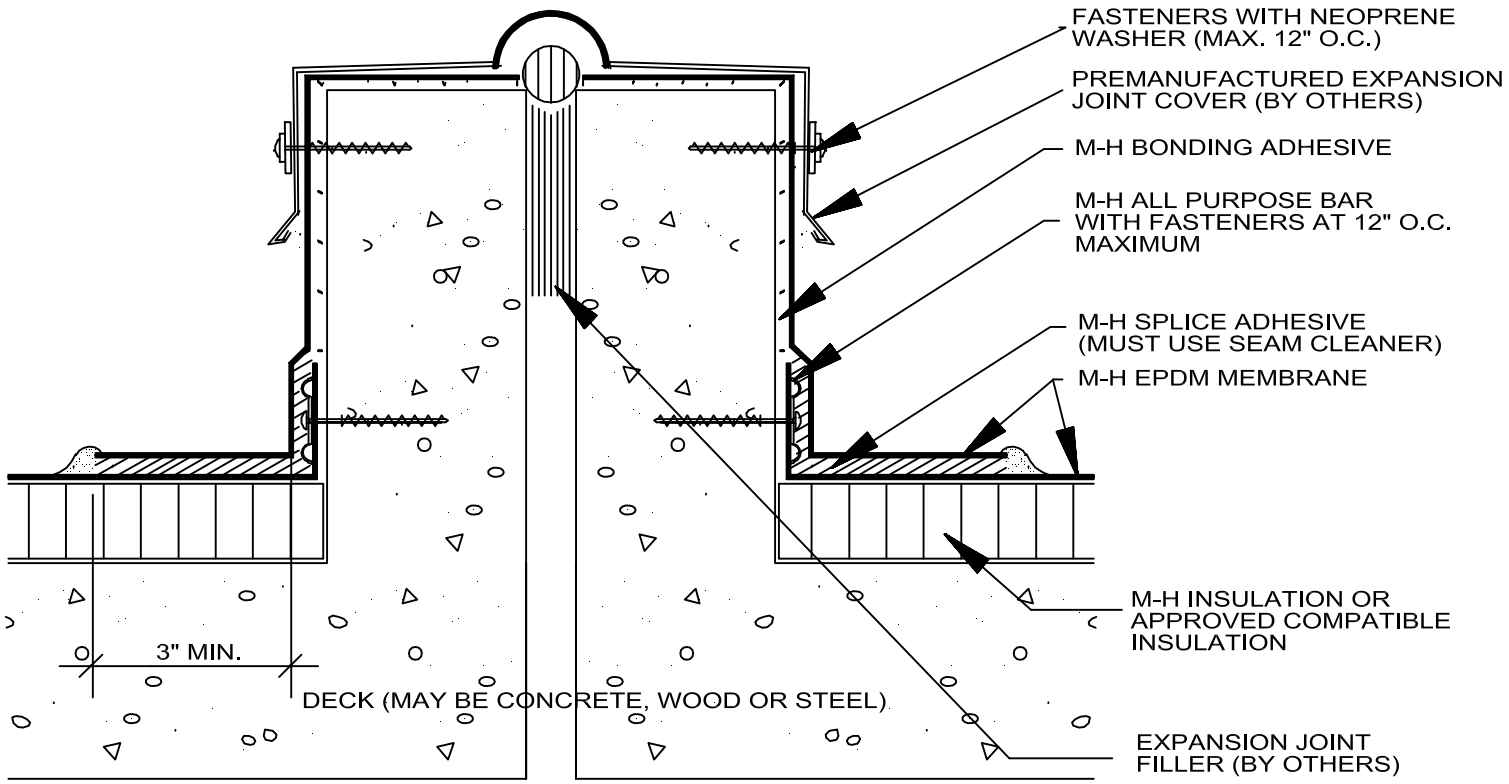

NOTE: DECK AND CURB MAY BE CONCRETE, STEEL OR WOOD.

MULE-HIDE PRODUCTS CO., INC. **04/01/2004**	EXPANSION JOINT CURB/FIREWALL	DETAIL NO.:
	SYSTEMS: ALL	MHE-157A

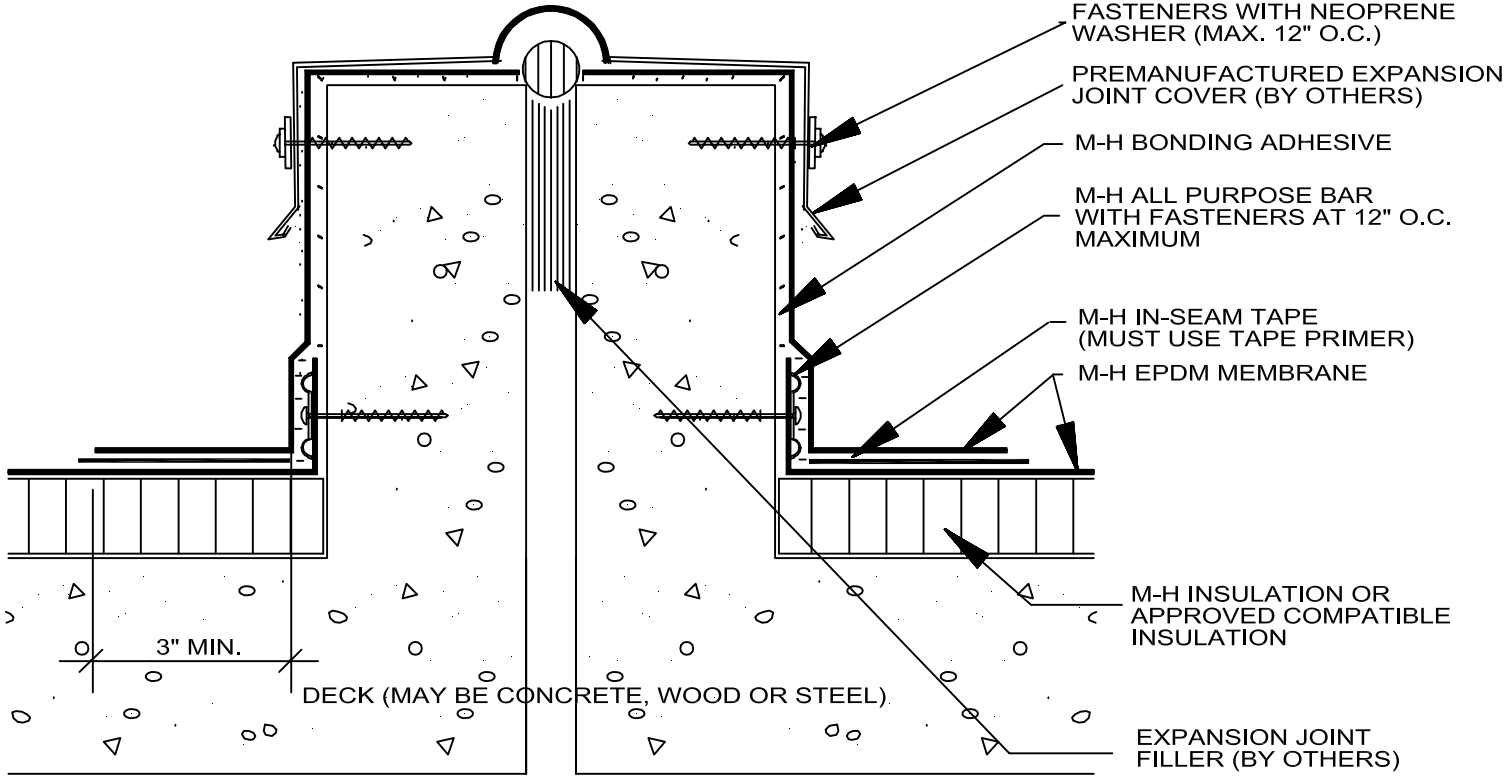

THIS DETAIL IS ACCEPTABLE FOR USE IN A 20-YEAR WARRANTED SYSTEM.

NOTE: DECK AND CURB MAY BE CONCRETE, STEEL OR WOOD.

MULE-HIDE PRODUCTS CO., INC. **04/01/2004**	EXPANSION JOINT CURB/FIREWALL	DETAIL NO.:
	SYSTEMS: ALL	MHE-157B

NOTE: ON GRAVEL SURFACED BUR SYSTEMS - GRAVEL MUST BE SPUDDED TO FELTS AT TIE-IN.

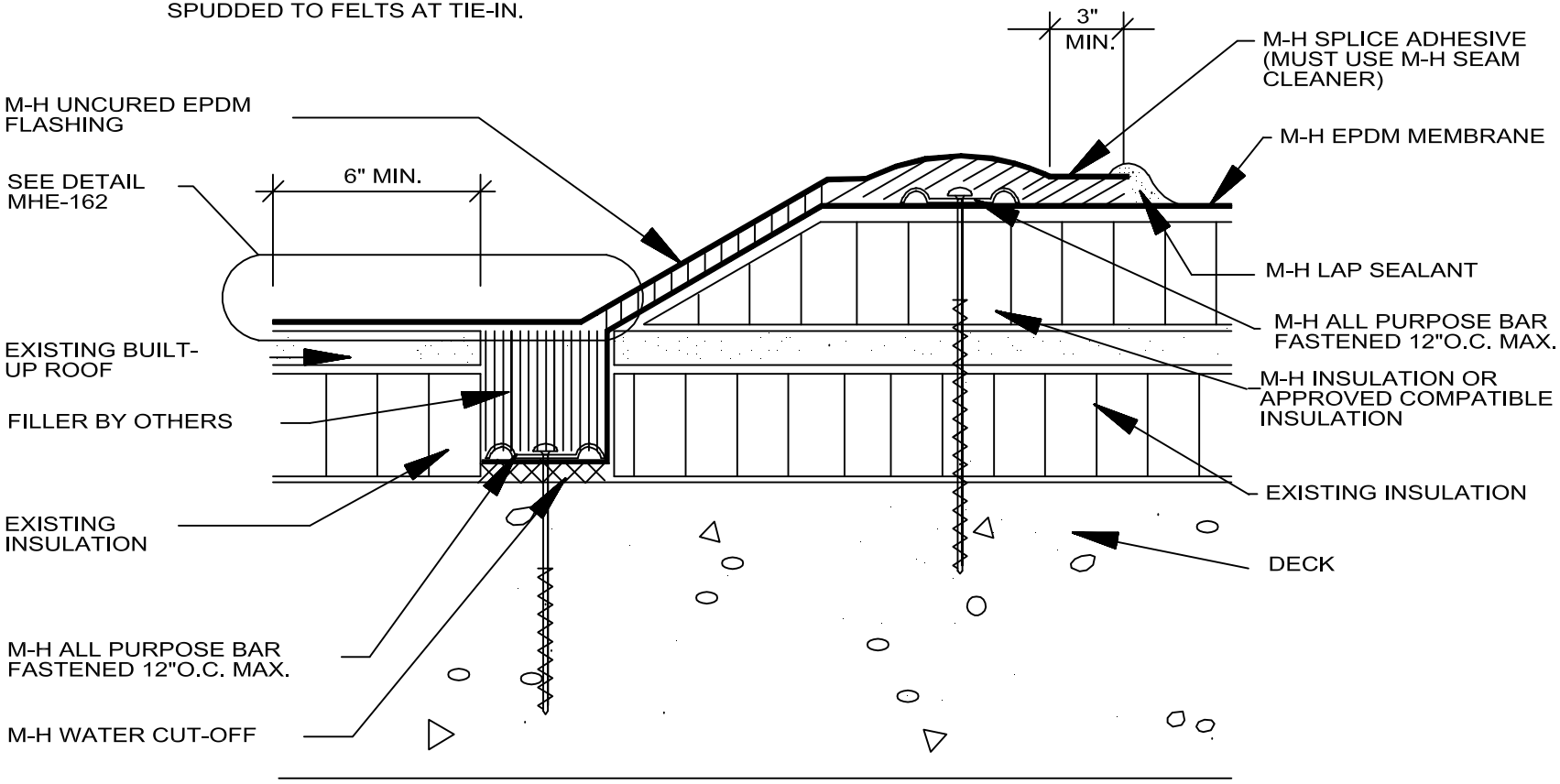

MULE-HIDE PRODUCTS CO., INC. **04/01/2004**	EPDM TIE-IN TO BUILT-UP ROOF SYSTEMS: ALL	DETAIL NO.: MHE-160A

NOTE: ON GRAVEL SURFACED BUR SYSTEMS - GRAVEL MUST BE SPUDDED TO FELTS AT TIE-IN.

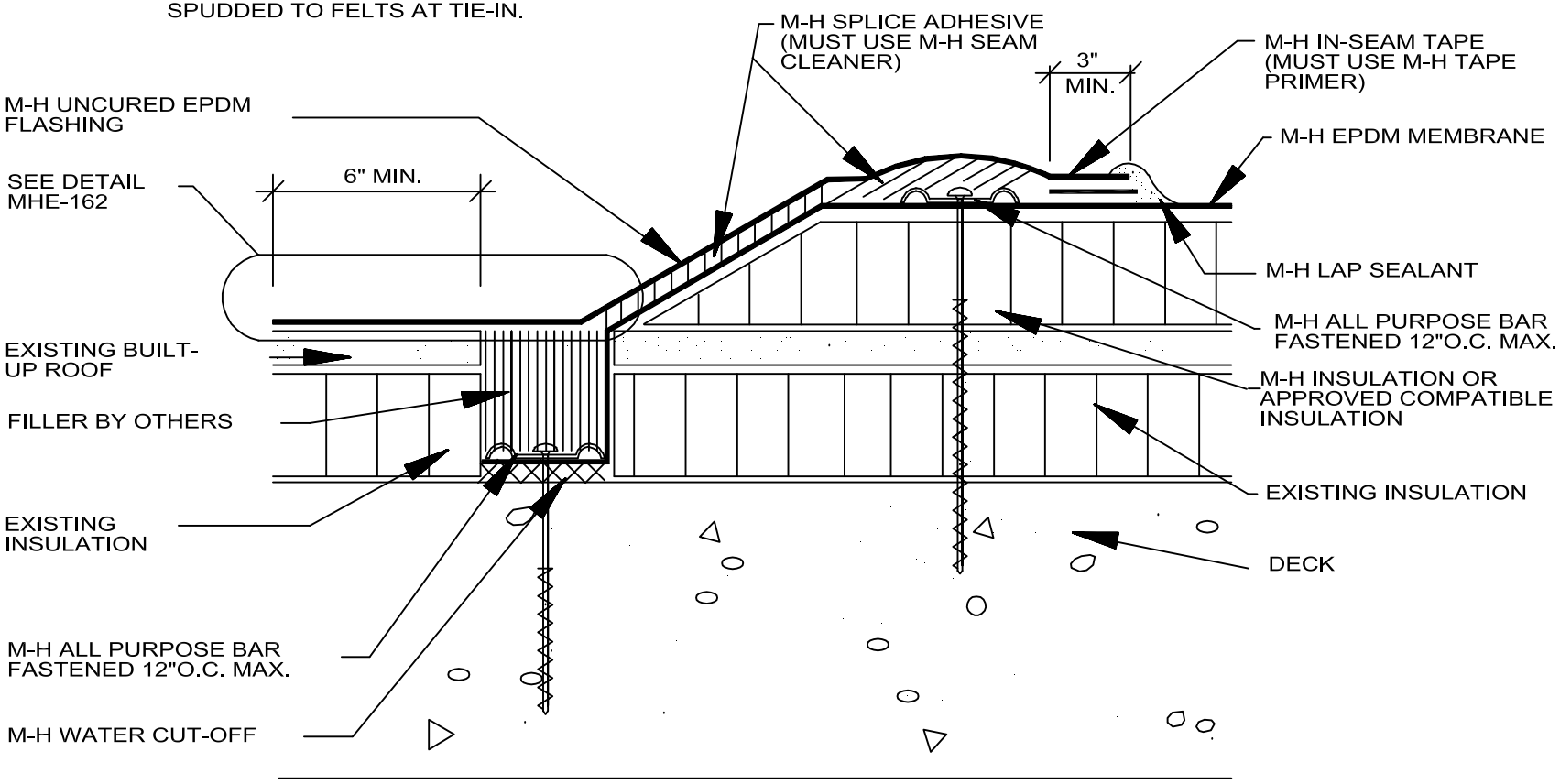

MULE-HIDE PRODUCTS CO., INC. **04/01/2004**	EPDM TIE-IN TO BUILT-UP ROOF	DETAIL NO.:
	SYSTEMS: ALL	MHE-160B

NOTE:
ON GRAVEL SURFACED BUR SYSTEMS - GRAVEL MUST BE SPUDDED TO FELTS AT TIE-IN.

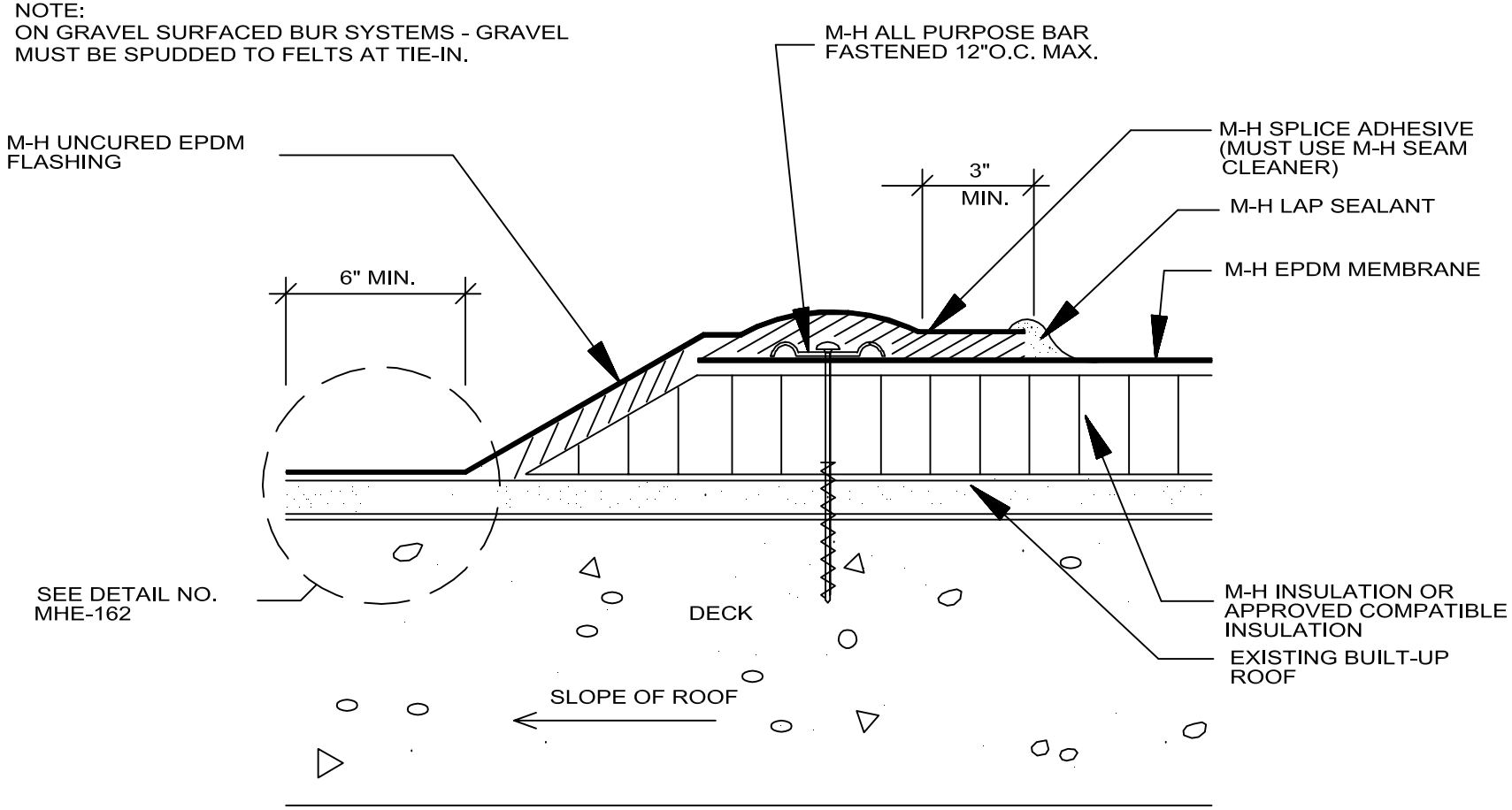

MULE-HIDE PRODUCTS CO., INC. 04/01/2004	EPDM TIE-IN TO BUILT-UP ROOF SYSTEMS: ALL	DETAIL NO.: MHE-161A

NOTE:
ON GRAVEL SURFACED BUR SYSTEMS - GRAVEL MUST BE SPUDDED TO FELTS AT TIE-IN.

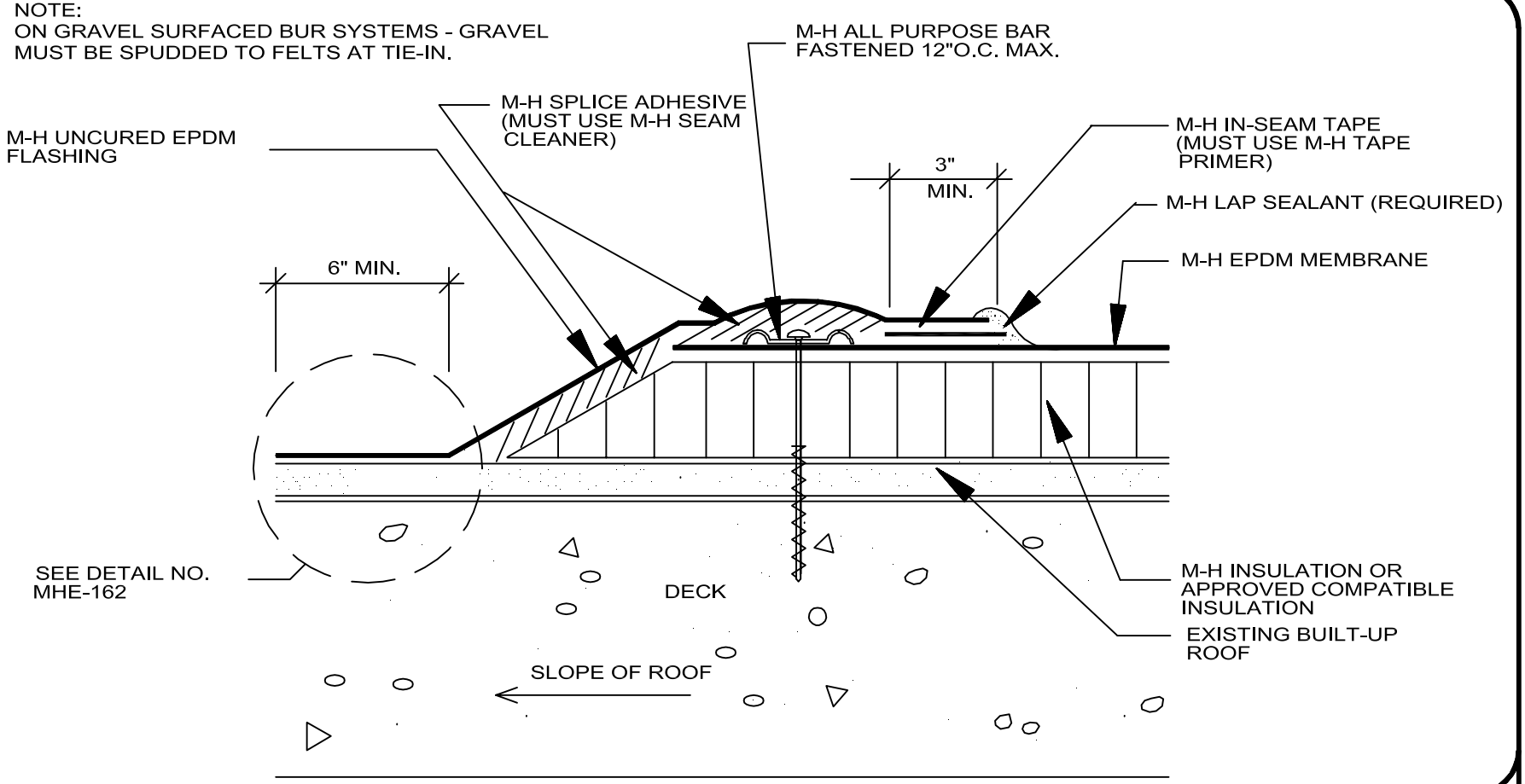

MULE-HIDE PRODUCTS CO., INC. **04/01/2004**	EPDM TIE-IN TO BUILT-UP ROOF	DETAIL NO.:
	SYSTEMS: ALL	MHE-161B

NOTE:
1. ON GRAVEL SURFACED BUILT-UP SYSTEMS - GRAVEL MUST BE SPUDDED TO FELTS AT TIE-IN.
2. HOT ASPHALT (TYPE III OR IV) OR COAL TAR PITCH TO BE DETERMINED BY EXISTING ROOF SYSTEM

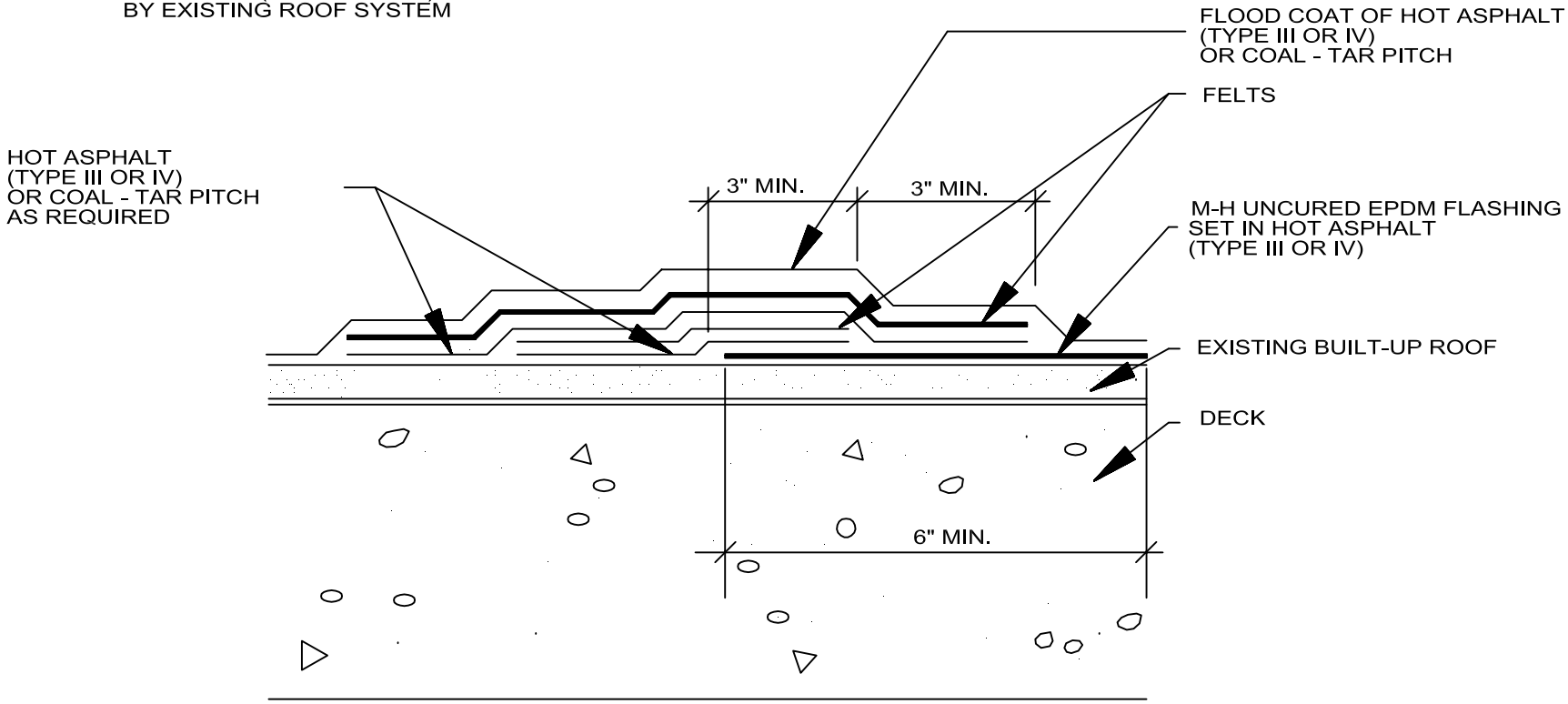

MULE-HIDE PRODUCTS CO., INC. **04/01/2004**	EPDM TIE-IN HOT STRIPPING	DETAIL NO.:
	SYSTEMS: ALL	MHE-162

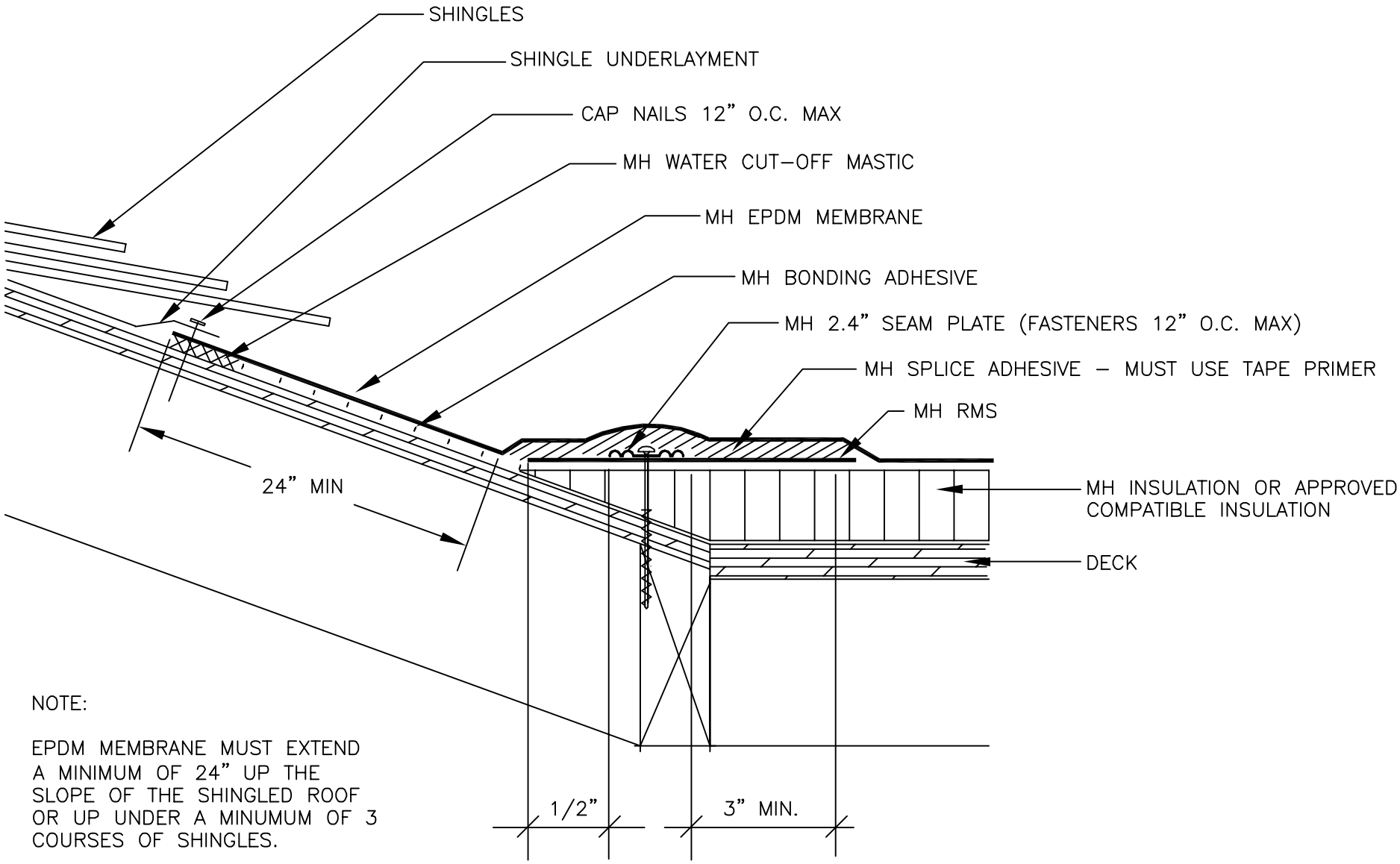

NOTE:

EPDM MEMBRANE MUST EXTEND A MINIMUM OF 24" UP THE SLOPE OF THE SHINGLED ROOF OR UP UNDER A MINUMUM OF 3 COURSES OF SHINGLES.

MULE-HIDE PRODUCTS CO., INC. 2010	***EPDM BASE TIE-IN TO SHINGLE ROOF RMS ATTACHMENT***	***DETAIL NO.:***
	SYSTEMS:	***MHE-163***
	ALL	

®

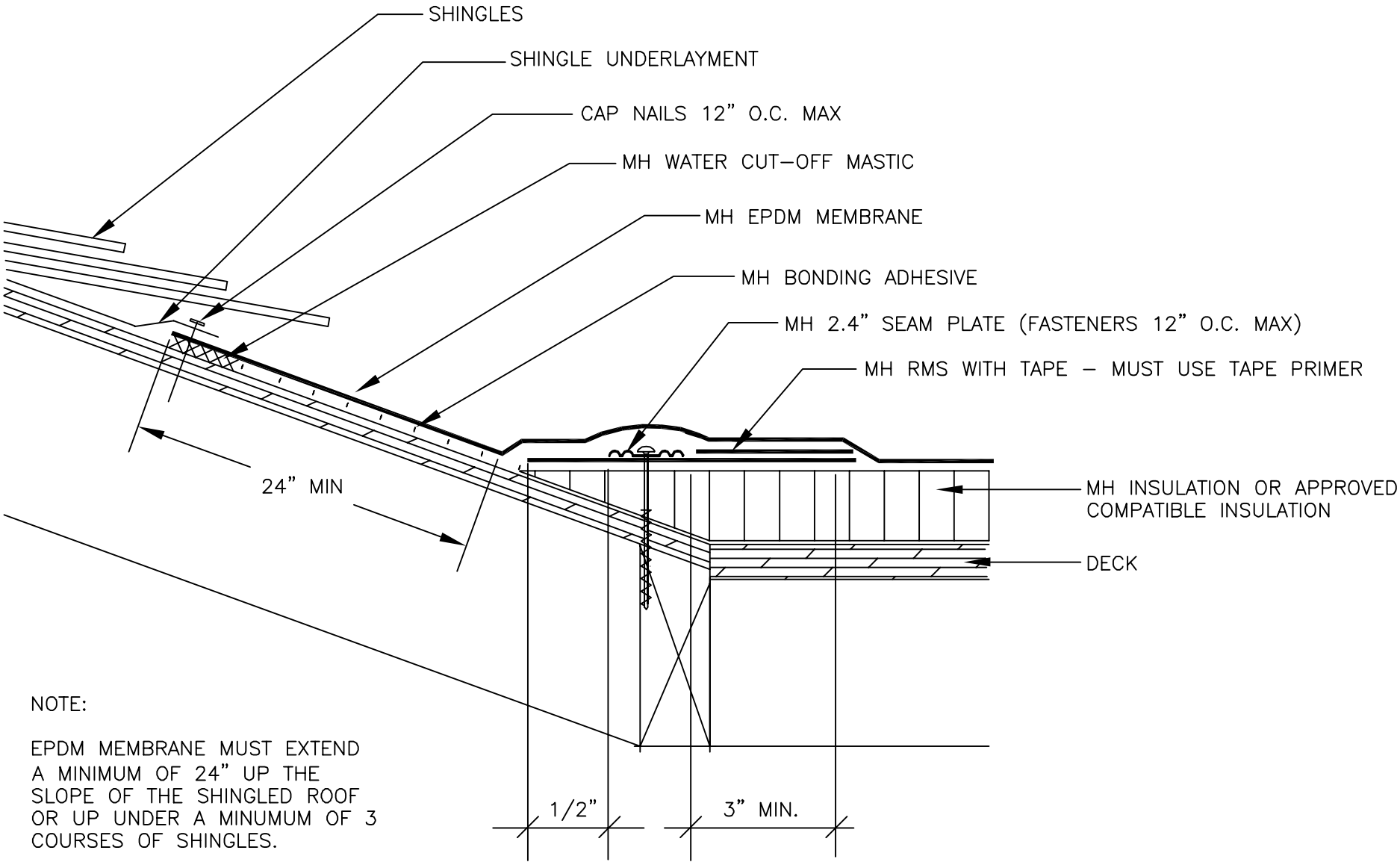

NOTE:

EPDM MEMBRANE MUST EXTEND A MINIMUM OF 24" UP THE SLOPE OF THE SHINGLED ROOF OR UP UNDER A MINUMUM OF 3 COURSES OF SHINGLES.

MULE-HIDE PRODUCTS CO., INC. 2010	***EPDM BASE TIE-IN TO SHINGLE ROOF RMS WITH TAPE ATTACHMENT***	***DETAIL NO.:***
	SYSTEMS:	***MHE-163A***
	ALL	

®

NOTE: LAP SEALANT IS REQUIRED WITH THIS DETAIL
DUE TO WATER RUNOFF FROM SHINGLE/PITCHED ROOF

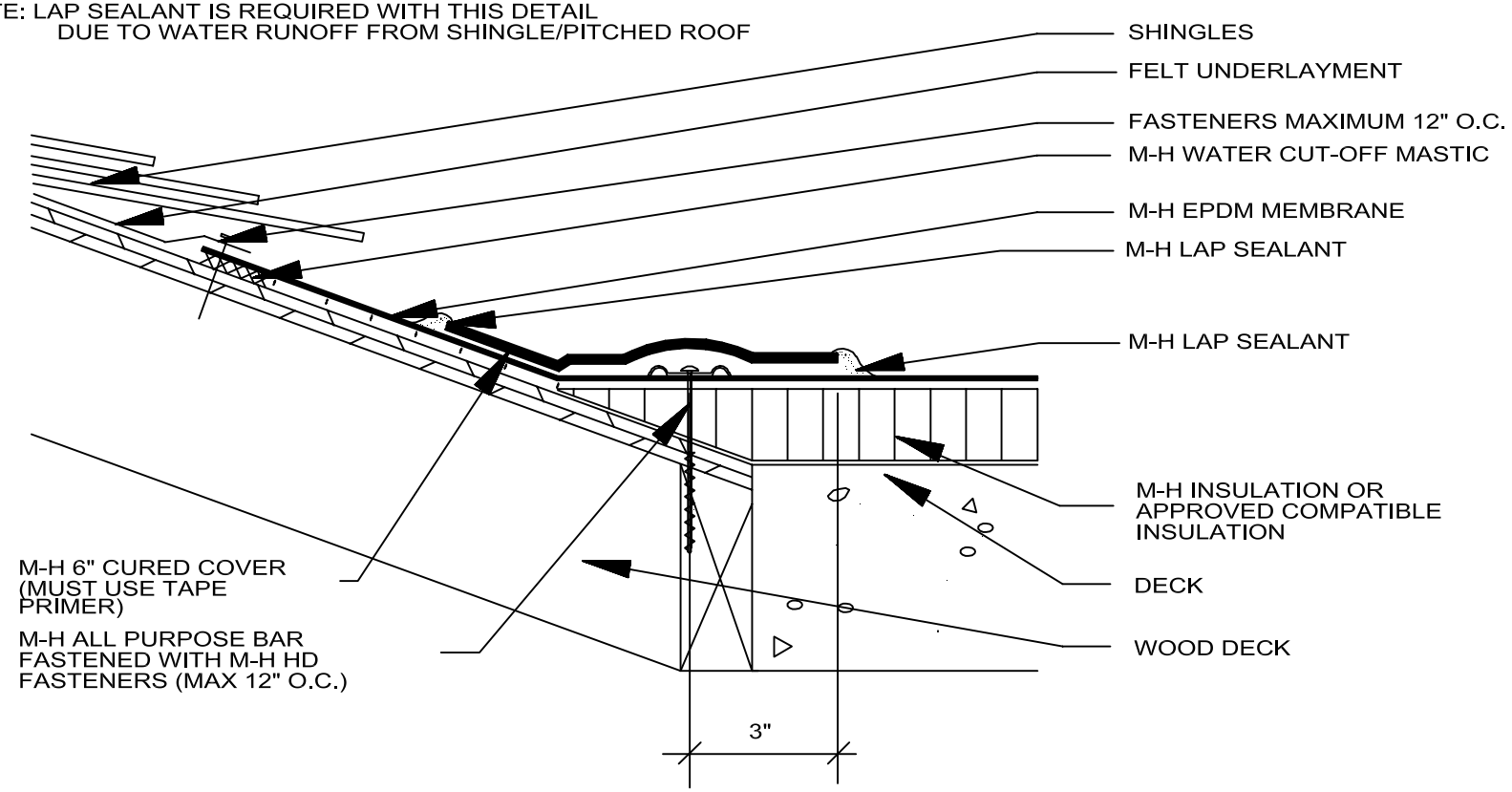

NOTE: EPDM MEMBRANE MUST EXTEND UP SLOPE A MINIMUM OF 24" OR UP UNDER A MINIMUM OF 3 COURSES OF SHINGLES.

MULE-HIDE PRODUCTS CO., INC. **04/01/2004**	EPDM BASE TIE-IN TO SHINGLE ROOF A-P BAR ATTACHMENT	DETAIL NO.:
	SYSTEMS: ALL	MHE-164

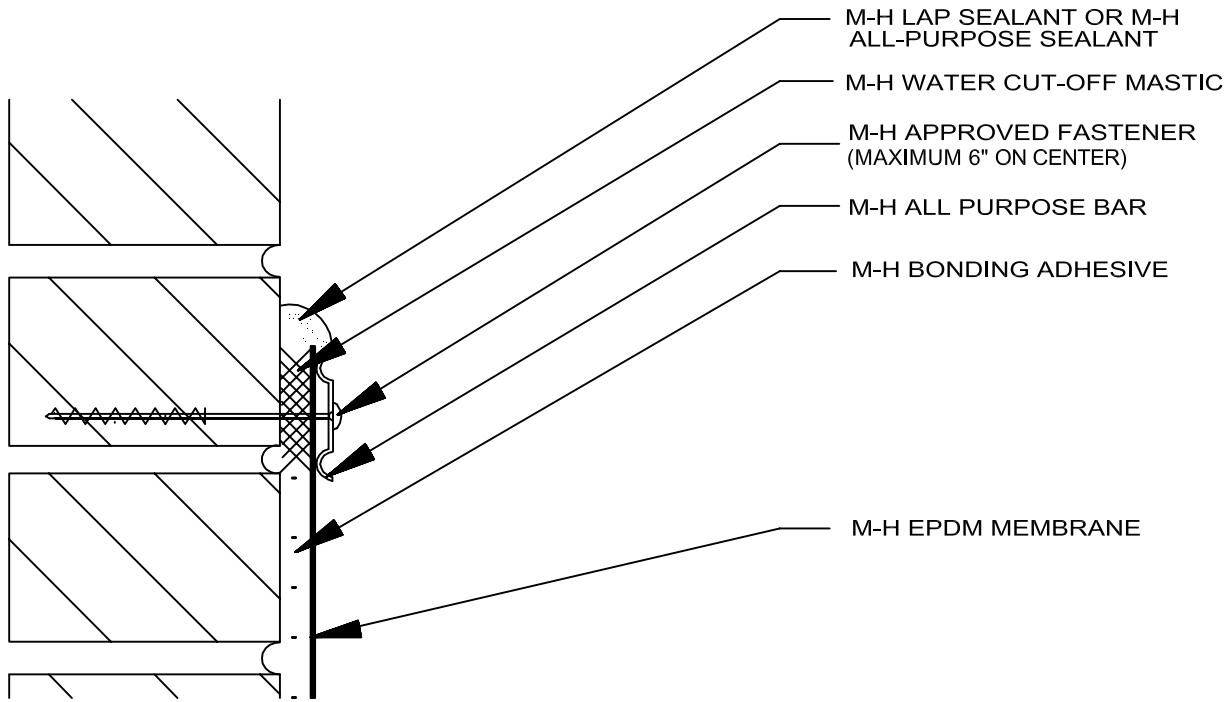

MULE-HIDE PRODUCTS CO., INC. **04/01/2004**	VERTICAL TERMINATION WITH A-P BAR	DETAIL NO.:
	SYSTEMS: ALL	MHE-170

NOTE: THE DIAMETER OF BACKER ROD MUST BE LARGER THAN REGLET OPENING.

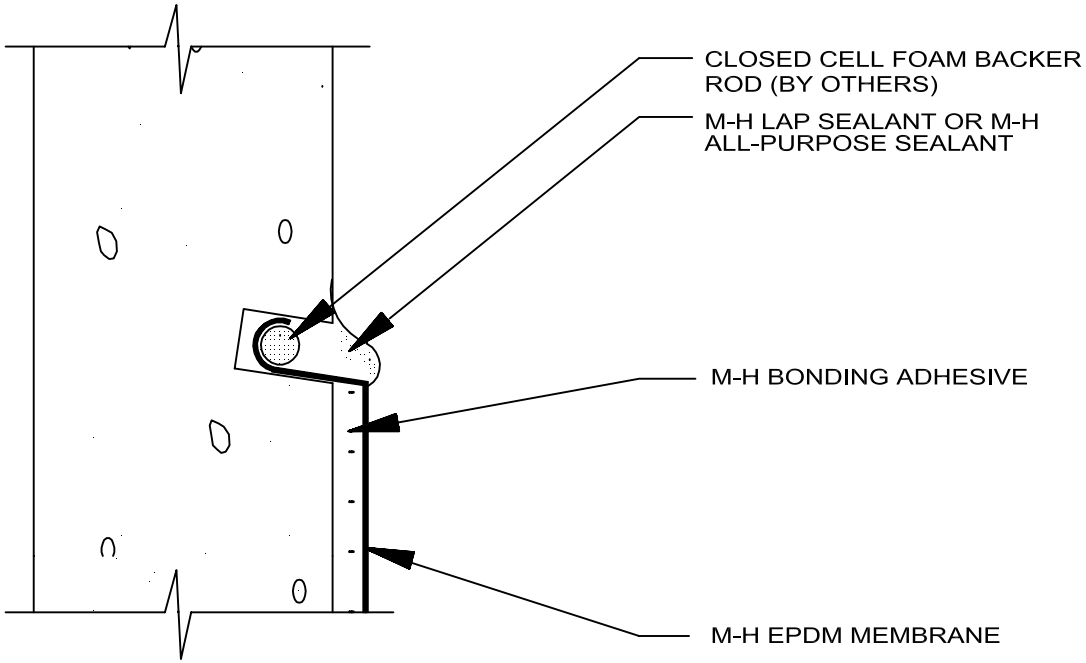

MULE-HIDE PRODUCTS CO., INC. **04/01/2004**	VERTICAL TERMINATION REGLET	DETAIL NO.:
	SYSTEMS: ALL	MHE-171

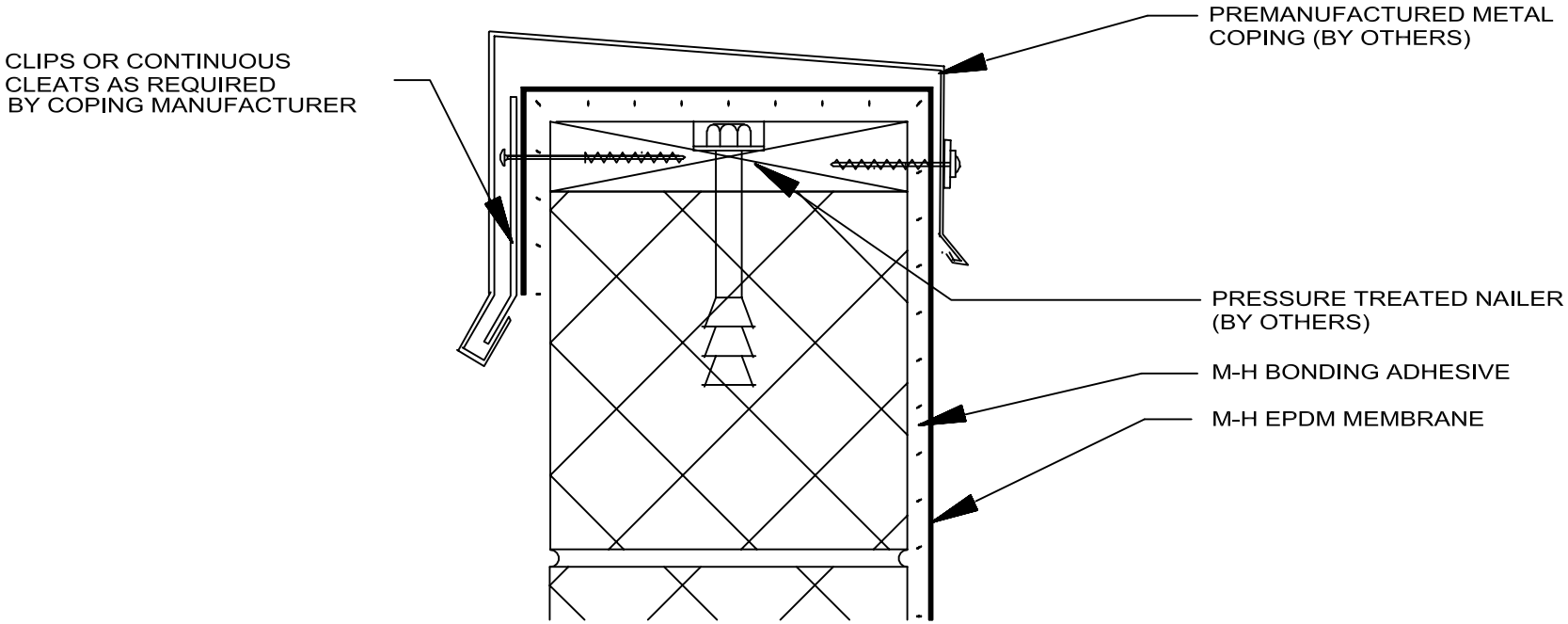

MULE-HIDE PRODUCTS CO., INC. **04/01/2004**	VERTICAL TERMINATION METAL COPING	DETAIL NO.:
	SYSTEMS: ALL	MHE-172

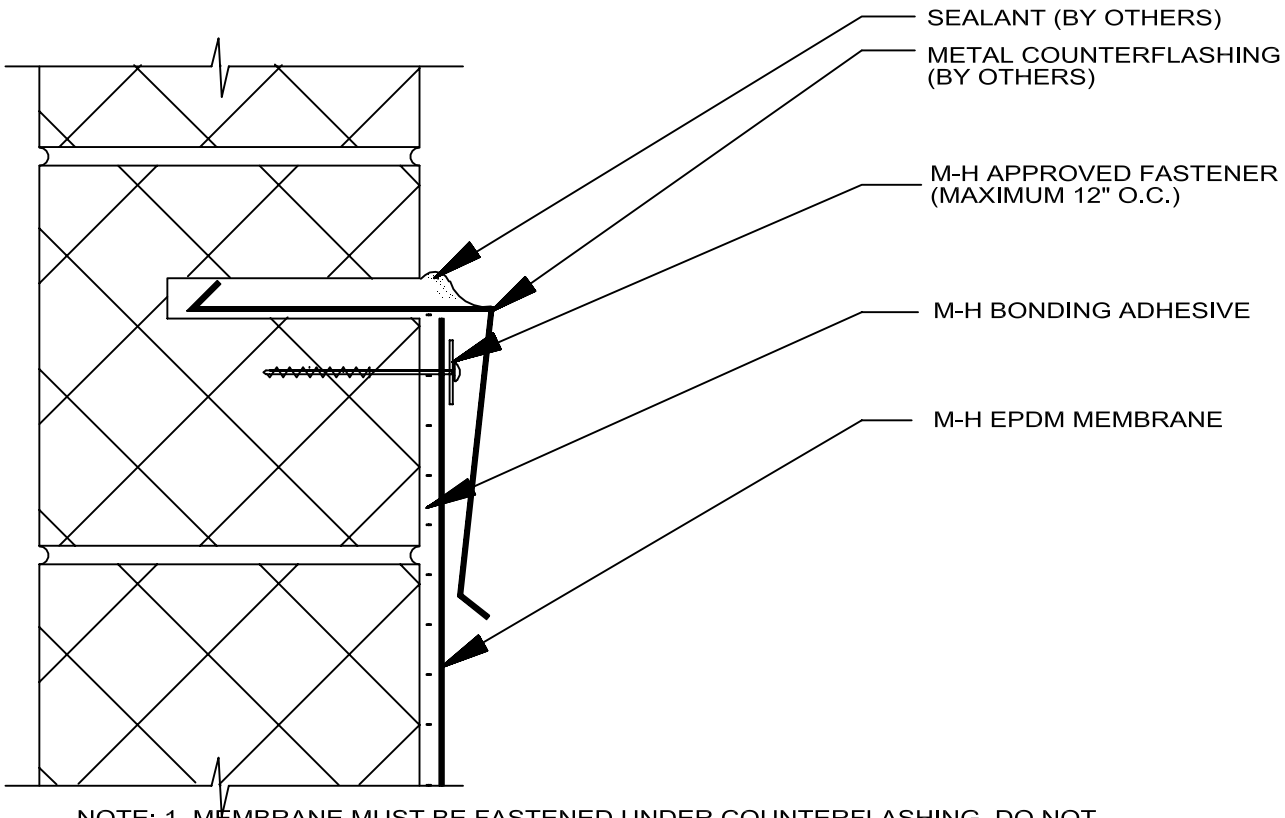

NOTE: 1. MEMBRANE MUST BE FASTENED UNDER COUNTERFLASHING, DO NOT FASTEN THROUGH COUNTERFLASHING.
2. ATTACHMENT OF COUNTERFLASHING AS DETERMINED BY SPECIFIER.

MULE-HIDE PRODUCTS CO., INC. **04/01/2004**	VERTICAL TERMINATION COUNTERFLASHING	DETAIL NO.:
	SYSTEMS: ALL	MHE-173

NOTE: ATTACHMENT OF COUNTERFLASHING AS DETERMINED BY SPECIFIER.

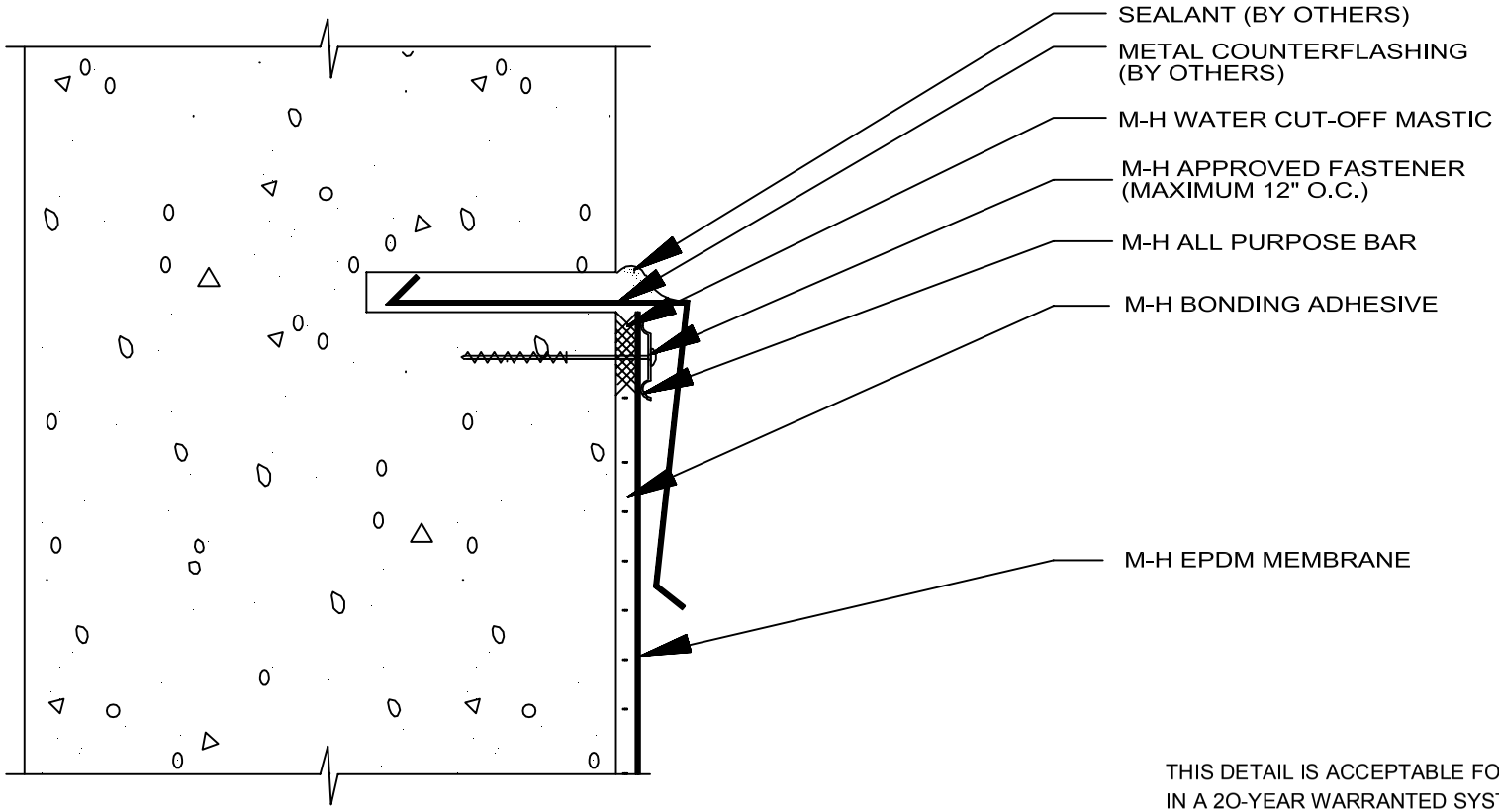

THIS DETAIL IS ACCEPTABLE FOR USE IN A 2O-YEAR WARRANTED SYSTEM.

MULE-HIDE PRODUCTS CO., INC. **04/01/2004**	VERTICAL TERMINATION COUNTERFLASHING W/ A-P BAR	DETAIL NO.:
	SYSTEMS: ALL	MHE-174

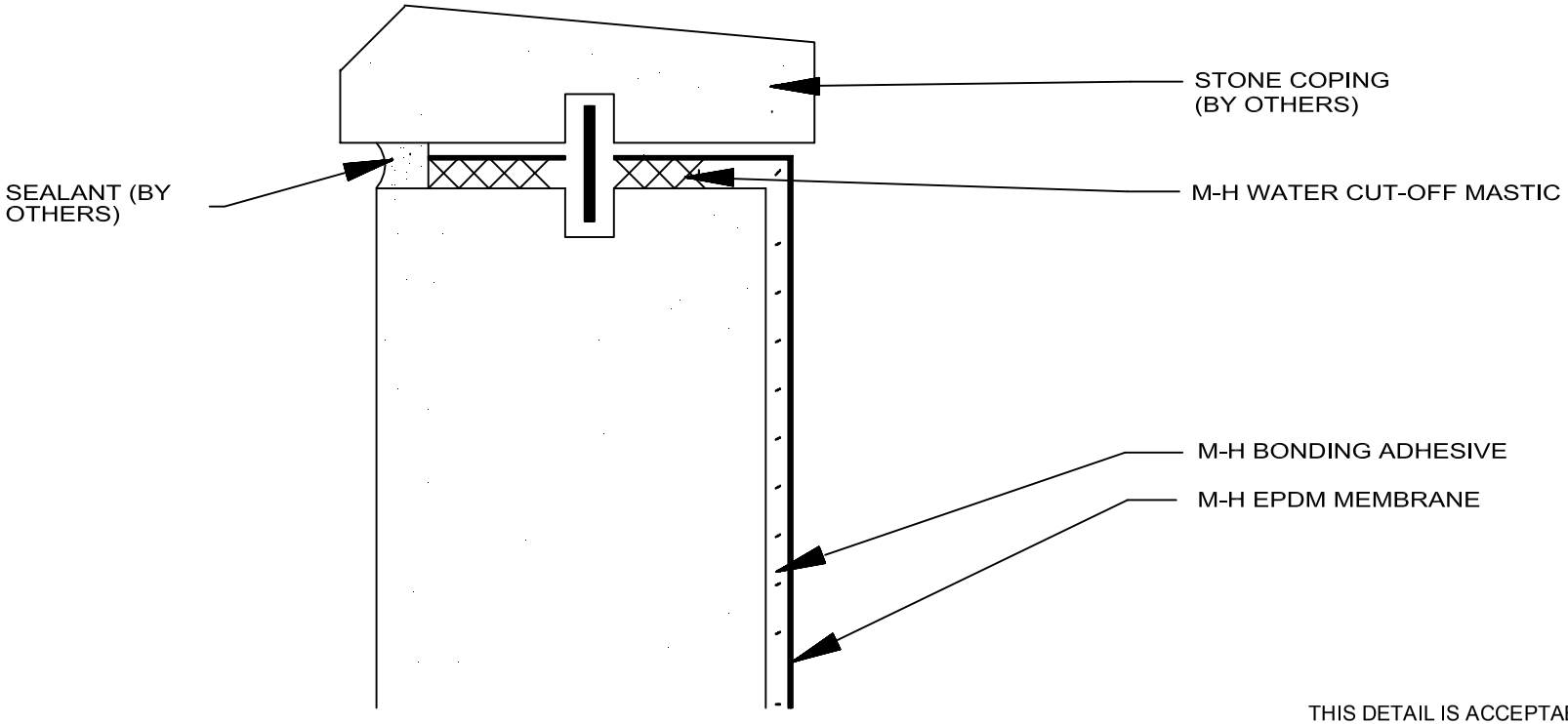

THIS DETAIL IS ACCEPTABLE FOR USE
IN A 2O-YEAR WARRANTED SYSTEM.

MULE-HIDE PRODUCTS CO., INC. **04/01/2004**	VERTICAL TERMINATION STONE COPING	DETAIL NO.:
	SYSTEMS: ALL	MHE-175

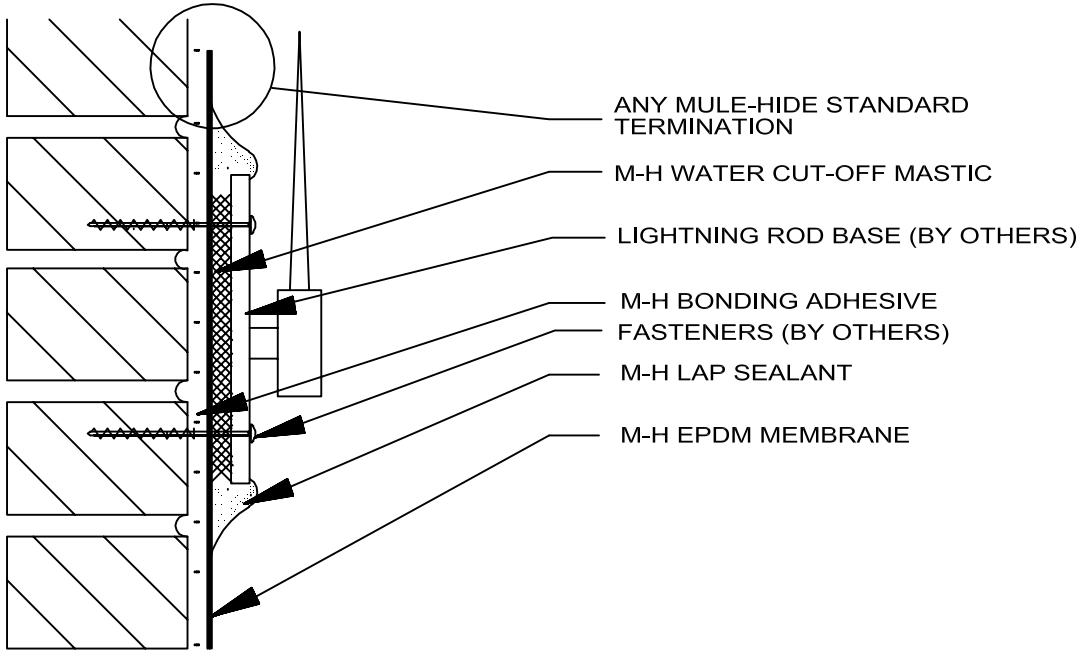

MULE-HIDE PRODUCTS CO., INC. **04/01/2004**	LIGHTNING ROD VERTICAL ATTACHMENT	DETAIL NO.:
	SYSTEMS: ALL	MHE-180

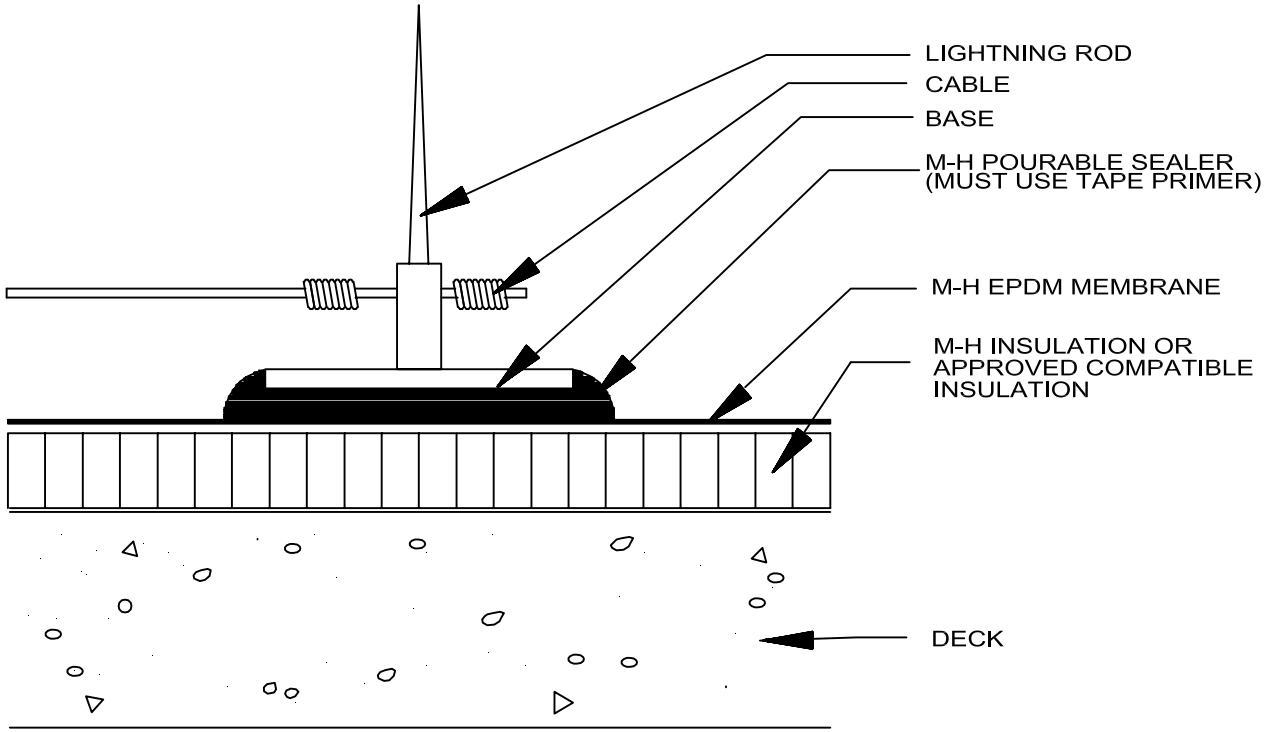

MULE-HIDE PRODUCTS CO., INC. **04/01/2004**	LIGHTNING ROD HORIZONTAL ATTACHMENT	DETAIL NO.:
	SYSTEMS: ALL	MHE-181

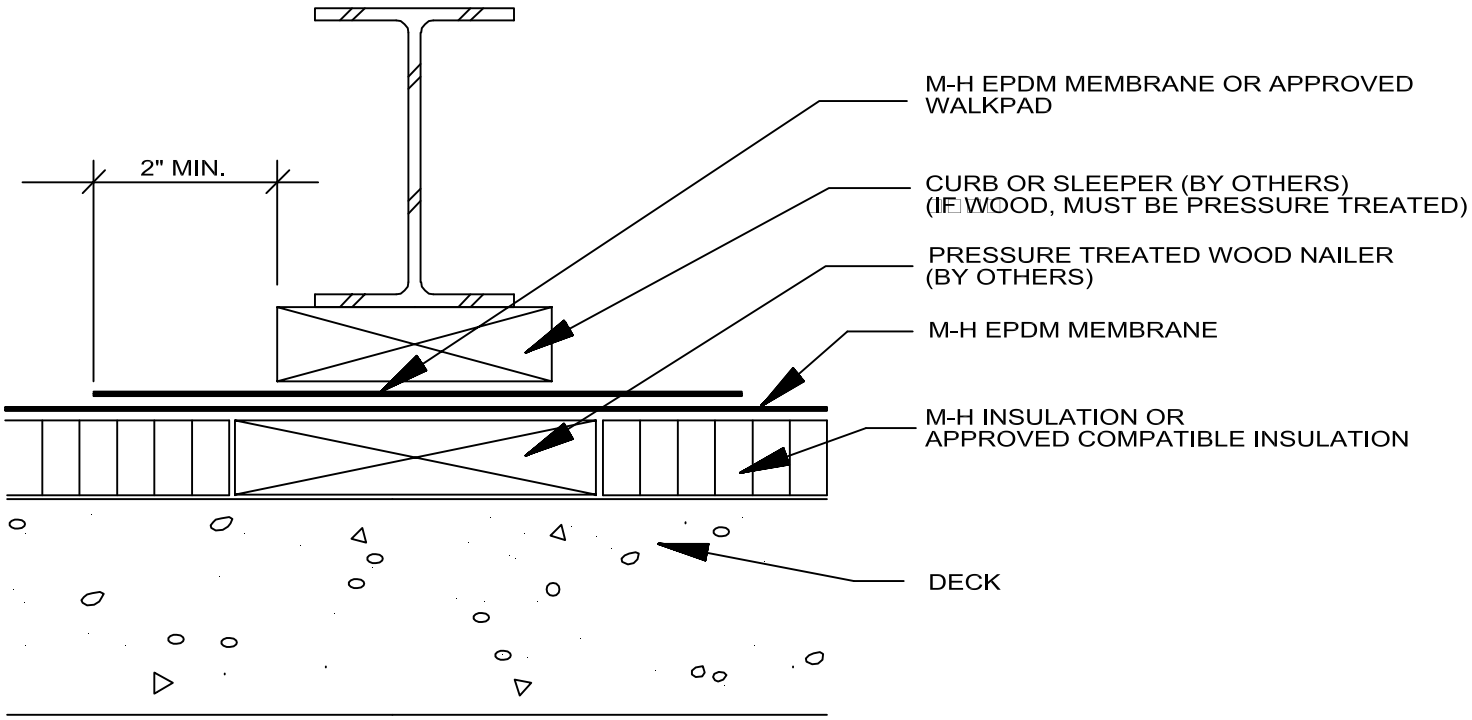

MULE-HIDE PRODUCTS CO., INC. **04/01/2004**	SLEEPER	DETAIL NO.:
	SYSTEMS: ALL	MHE-182

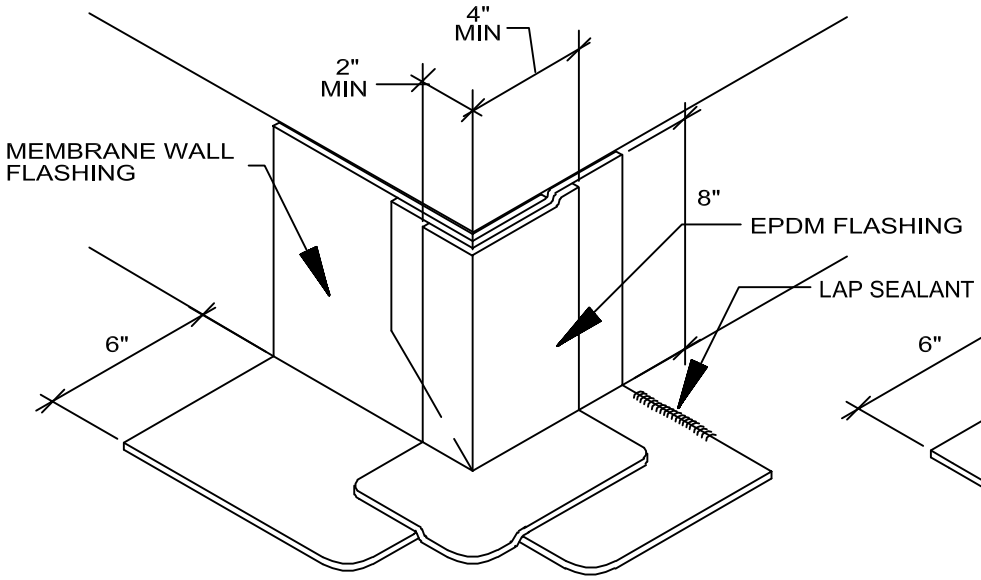

STEP NO. 1

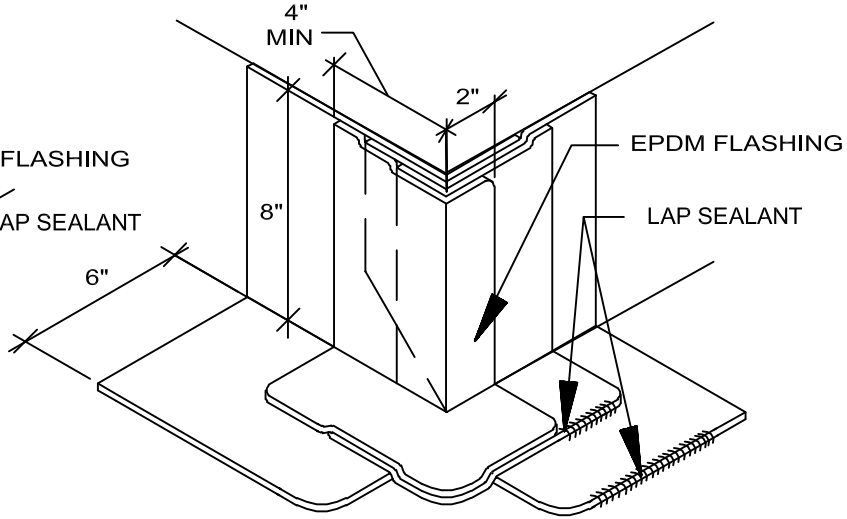

THIS DETAIL IS ACCEPTABLE FOR USE
IN A 20-YEAR WARRANTED SYSTEM.

STEP NO. 2

NOTE: WHEN USING UNCURED EPDM FLASHING, SPLICE ADHESIVE AND SEAM CLEANER ARE REQUIRED. WHEN USING FLASHING TAPE, TAPE PRIMER IS REQUIRED TO PREP ALL SURFACES TO WHICH THE FLASHING TAPE WILL BE APPLIED.

MULE-HIDE PRODUCTS CO., INC. **04/01/2004**	EPDM OUTSIDE CORNER	DETAIL NO.:
	SYSTEMS: ALL	MHE-183

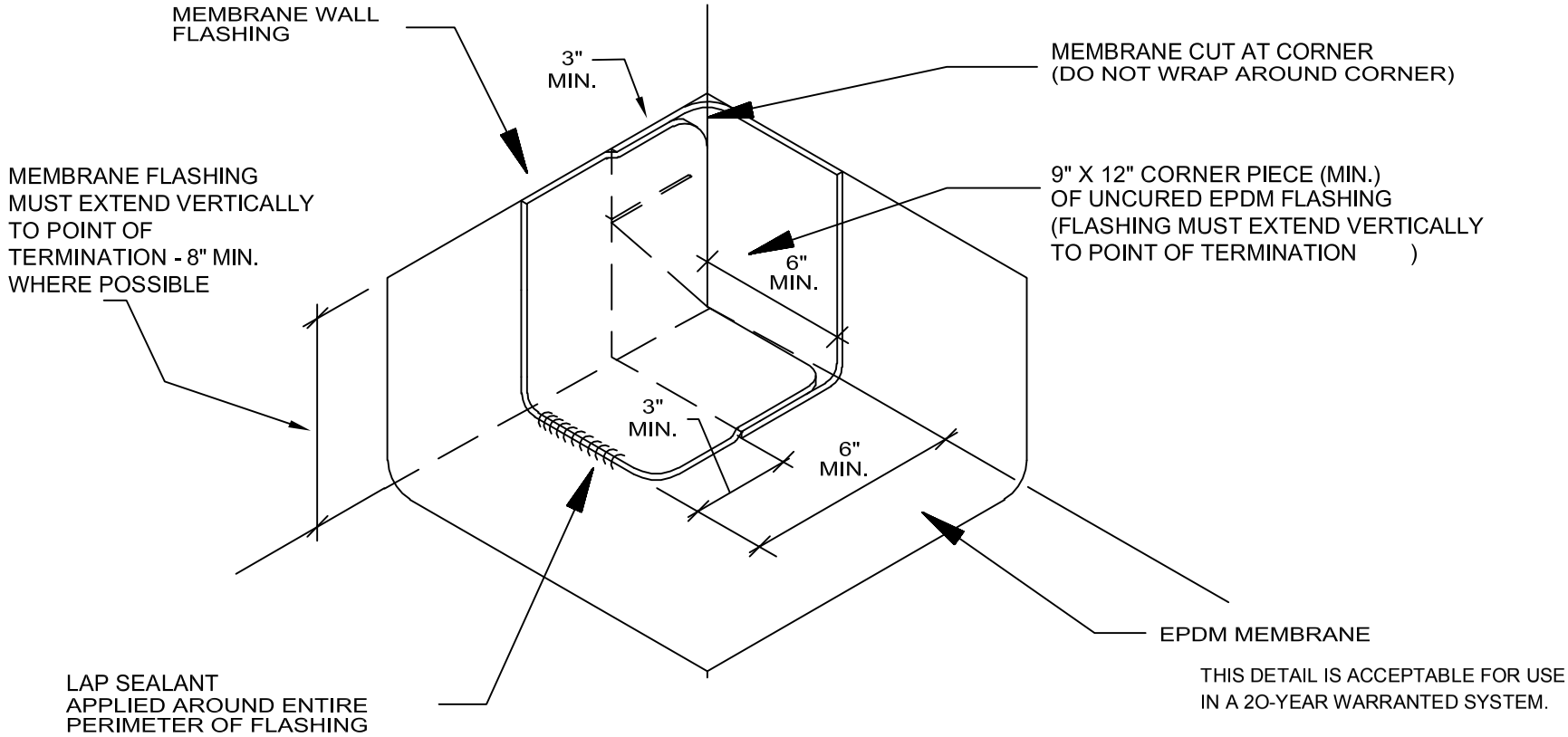

THIS DETAIL IS ACCEPTABLE FOR USE IN A 20-YEAR WARRANTED SYSTEM.

NOTE: WHEN USING UNCURED EPDM FLASHING, SPLICE ADHESIVE AND SEAM CLEANER ARE REQUIRED. WHEN USING FLASHING TAPE, TAPE PRIMER IS REQUIRED TO PREP ALL SURFACES TO WHICH THE FLASHING TAPE WILL BE APPLIED. SPLICE ADHESIVE IS REQUIRED TO ADHERE THE "PIG EAR".

MULE-HIDE PRODUCTS CO., INC. **04/01/2004**	2 PIECE INSIDE CORNER EPDM WALL FLASHING	DETAIL NO.: MHE-184
	SYSTEMS: ALL	

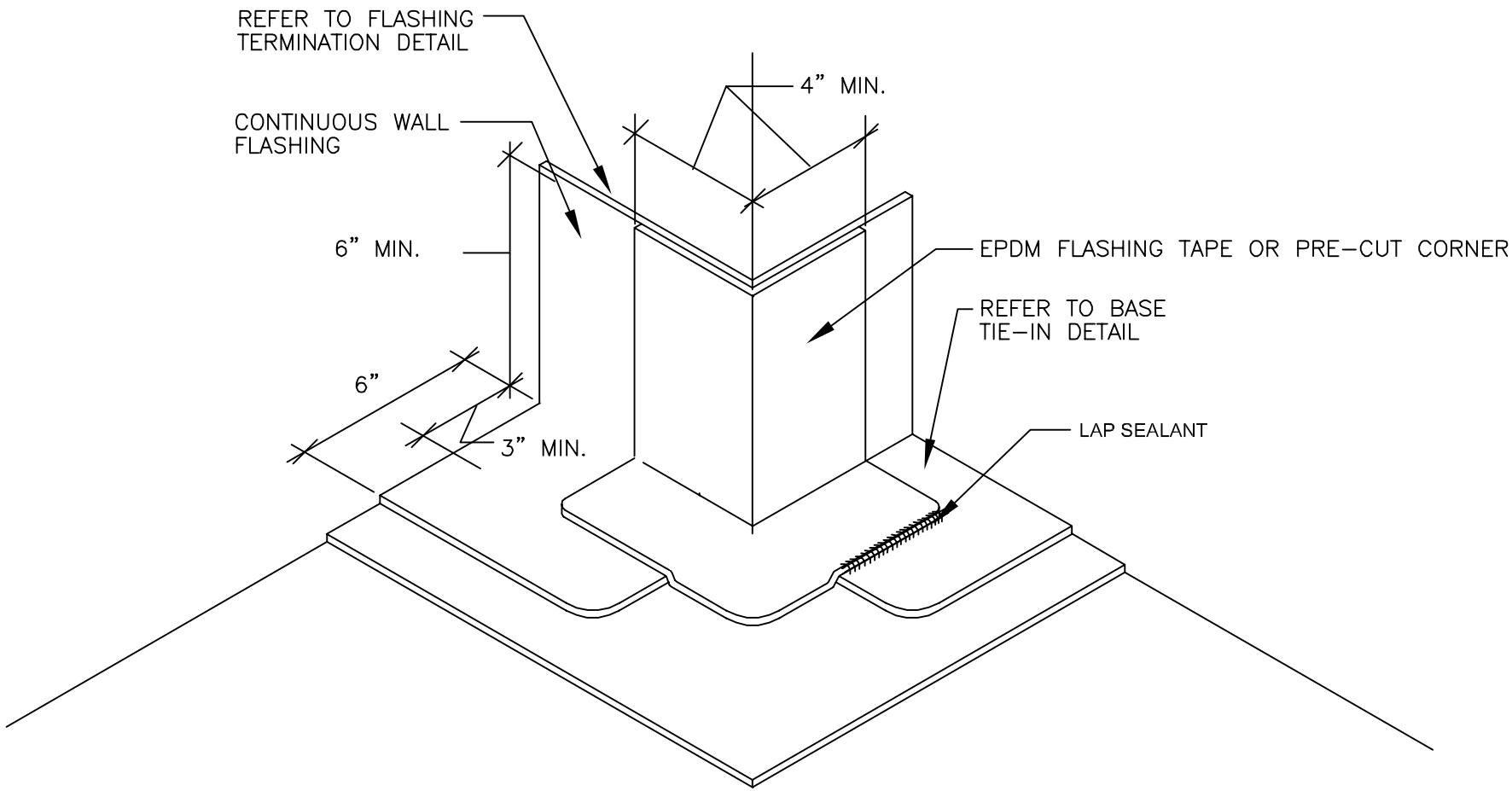

WHEN USING FLASHING TAPES, TAPE PRIMER MUST BE USED

MULE-HIDE PRODUCTS CO., INC. 2010	***EPDM OUTSIDE CORNER ONE PIECE WRAP***	***DETAIL NO.:***
	SYSTEMS:	***MHE-186***
	ALL	

®

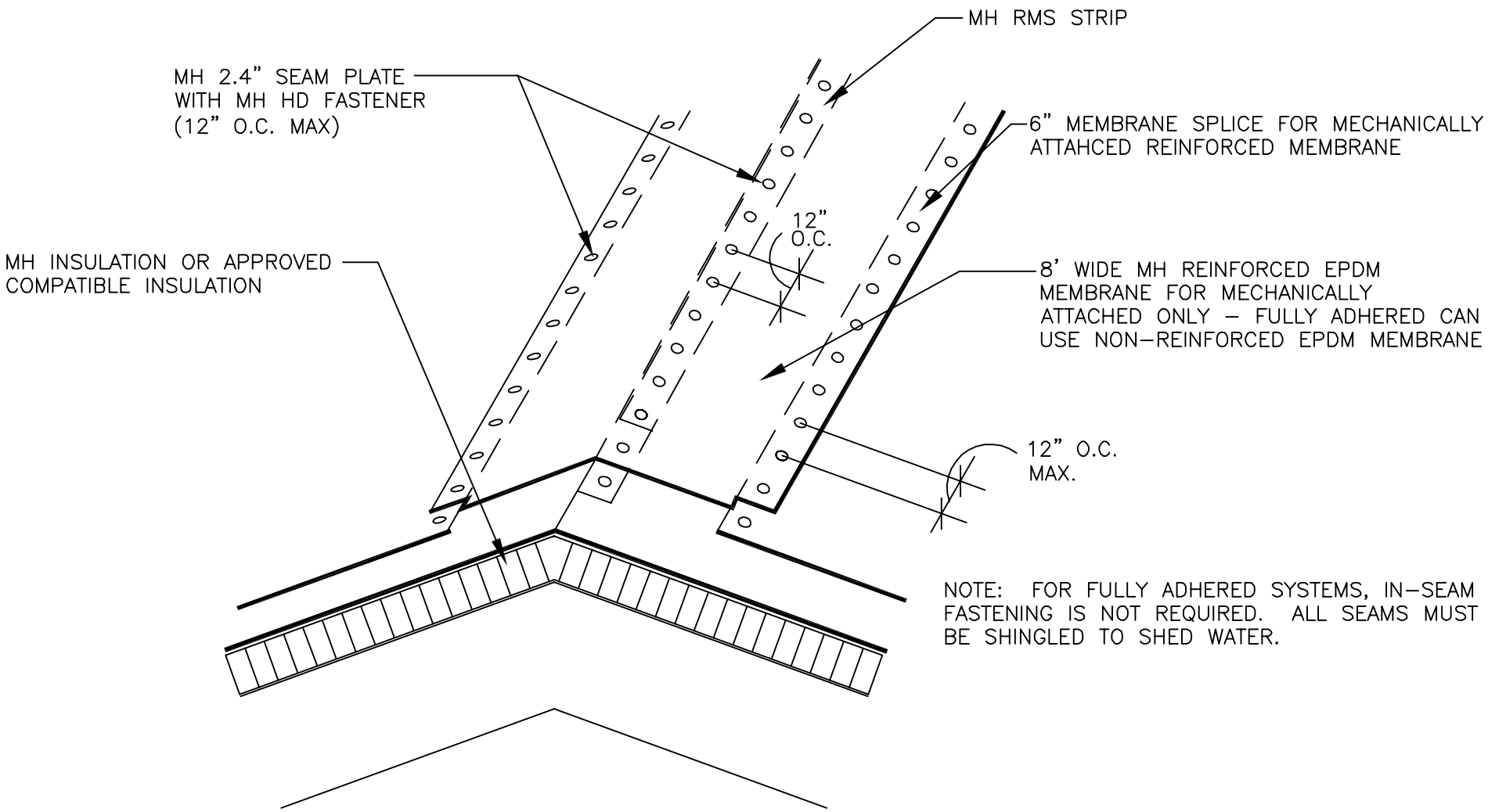

NOTE: FOR FULLY ADHERED SYSTEMS, IN–SEAM FASTENING IS NOT REQUIRED. ALL SEAMS MUST BE SHINGLED TO SHED WATER.

NOTE: 6" WIDE SEAM WHEN USING REINFORCED EPDM MEMBRANE, MAY BE COMPLETED WITH EITHER SPLICE ADHESIVE AND TAPE PRIMER OR 6" WIDE IN–SEAM TAPE AND TAPE PRIMER.

MULE-HIDE PRODUCTS CO., INC. 2010	***RIDGE ATTACHEMENT WITH RMS***	***DETAIL NO.:***
	SYSTEMS:	***MHE-190***
	MECHANICALLY ATTACHED AND FULLY ADHERED	

®

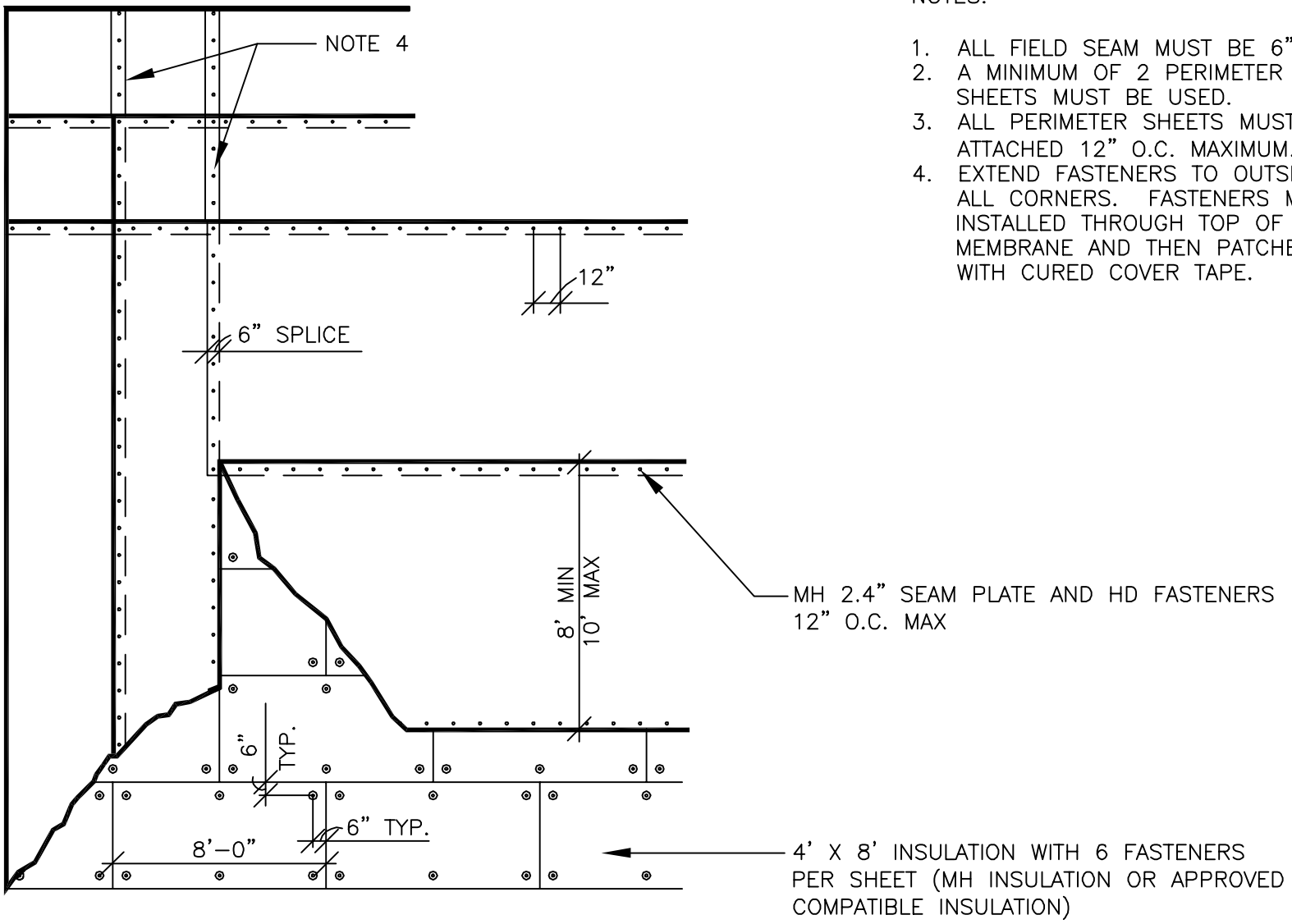

NOTES:

1. ALL FIELD SEAM MUST BE 6" WIDE.
2. A MINIMUM OF 2 PERIMETER SHEETS MUST BE USED.
3. ALL PERIMETER SHEETS MUST BE ATTACHED 12" O.C. MAXIMUM.
4. EXTEND FASTENERS TO OUTSIDE AT ALL CORNERS. FASTENERS MAY BE INSTALLED THROUGH TOP OF MEMBRANE AND THEN PATCHED WITH CURED COVER TAPE.

MULE-HIDE PRODUCTS CO., INC. 2010	***PERIMETER SHEET ATTACHMENT***	***DETAIL NO.:***
	SYSTEMS: ***MECHANICALLY ATTACHED***	***MHE-191***

®

NOTES:

1. ALL FIELD SEAMS MUST BE 6" WIDE.
2. A MINIMUM OF 1 FULL WIDTH PERIMETER SHEET MUST BE USED.
3. ALL FIELD SHEETS MUST BE ATTACHED 12" O.C. MAX.
4. THE RMS STRIP MUST BE CENTERED UNDER THE PERIMETER SHEET AND RUN PARALLEL WITH THE EDGE OF THE ROOF. ATTACHMENT OF THE RMS MUST NOT EXCEED 12" O.C.

NOTE:

RMS WITH TAPE IS NOT APPROVED FOR THIS DETAIL.

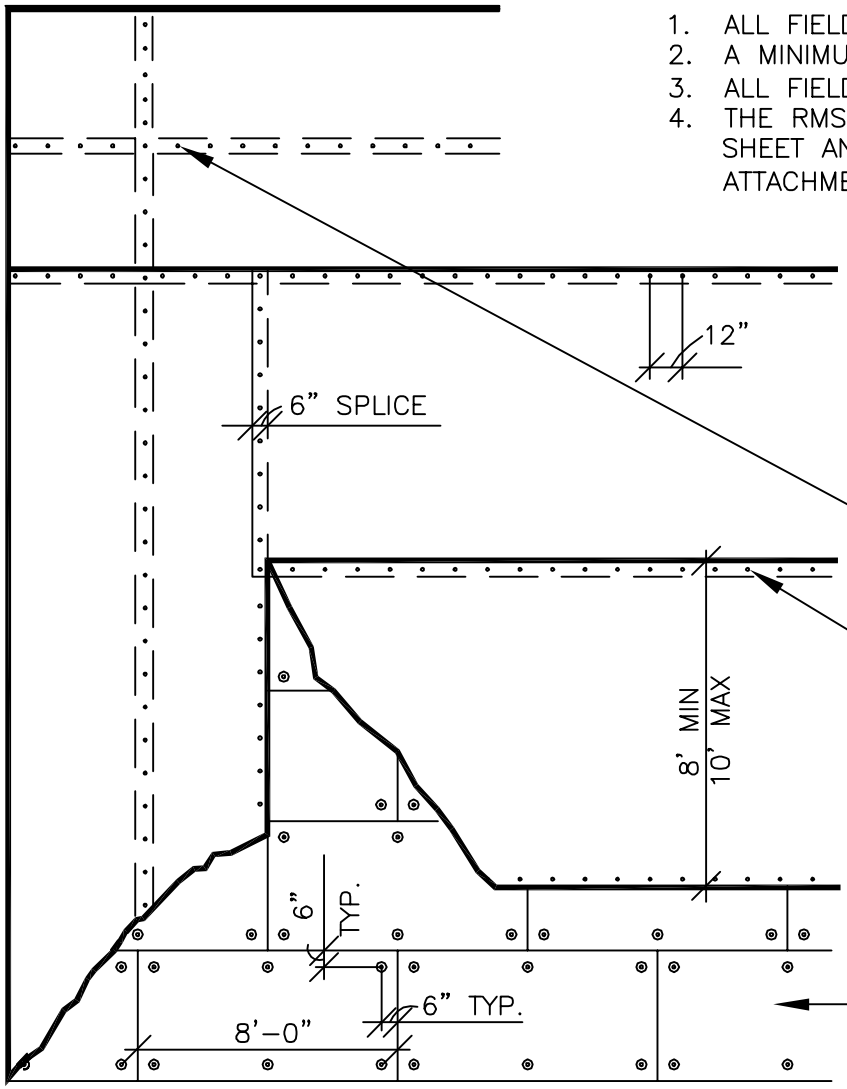

RMS STRIP FASTENED A MAXIMUM OF 12" O.C.

MH 2.4" SEAM PLATE AND HD FASTENERS 12" O.C. MAX

4' X 8' INSULATION WITH 6 FASTENERS PER SHEET (MH INSULATION OR APPROVED COMPATIBLE INSULATION)

MULE-HIDE PRODUCTS CO., INC. 2010	***PERIMETER SHEET ATTACHMENT FULL SHEET WITH RMS STRIP***	***DETAIL NO.:***
	SYSTEMS:	***MHE-192***
	MECHANICALLY FASTENED	

®