SECTION 9

MULE-HIDE PRODUCTS CO., INC.

EPDM
PRODUCT DATA SHEETS (PDS)

Please consult the Mule-Hide website for the most current information at www.mulehide.com

MULE-HIDE EPDM
PRODUCT DATA SHEETS (PDS)

TABLE OF CONTENTS

Membrane
Mule-Hide Standard Black EPDM Membrane ..... PDS 09-1305
Mule-Hide FR 60 and 90 mil EPDM Membrane (Pre-cleaned) ..... PDS 09-1310
Mule-Hide Standard and Fire Retardant Reinforced EPDM Membrane ..... PDS 09-1320
Mule-Hide White-On-Black EPDM Membrane ..... PDS 09-1330
Mule-Hide Polyepichlorohydrin (ECO/CO) ..... PDS 09-1350

Adhesives and Sealants
Mule-Hide Universal Single Ply Sealant ..... PDS 09-2105
Mule-Hide EPDM Water Cut-Off ..... PDS 09-2110
Mule-Hide Pourable Sealer ..... PDS 09-2210
Black One-Part Pourable Sealer ..... PDS 09-2220
Mule-Hide All Purpose Single Seal Adhesive (*not for warranted projects*) .. PDS 09-2305
Mule-Hide Bonding Adhesive ..... PDS 09-2320
Low VOC Bonding Adhesive ..... PDS 09-2405
Low VOC Bonding Adhesive 1168 (for California) ..... PDS 09-2415
Mule-Hide WBBA-2000 bonding adhesive ..... PDS 09-2505
Mule-Hide Acrylic Water Base Bonding Adhesive ..... PDS 09-2510

Seaming
Mule-Hide Weathered Membrane Cleaner ..... PDS 09-3105
Mule-Hide Tape Primer ..... PDS 09-3205
Low VOC Tape Primer ..... PDS 09-3210
Mule-Hide Black Splice Adhesive ..... PDS 09-3305
Mule-Hide White Splice Adhesive ..... PDS 09-3310
Mule-Hide EPDM In-Seam Tape ..... PDS 09-3315
Mule-Hide EPDM Black Lap Sealant ..... PDS 09-3415

Flashings
Mule-Hide Cured EPDM Cover Tape ..... PDS 09-4130
Mule-Hide Reinforced EPDM Membrane Strips (RMS) ..... PDS 09-4140
Mule-Hide Uncured EPDM Flashing Membrane ..... PDS 09-4150
Mule-Hide Uncured EPDM Flashing Tape Black ..... PDS 09-4160
Mule-Hide Uncured EPDM Flashing Tape White ..... PDS 09-4162
Mule-Hide Pourable Sealer Pockets ..... PDS 09-4215
Mule-Hide Premolded EPDM Pipe Boots ..... PDS 09-4301
Mule-Hide Pre-Cut Inside/Outside Corners ..... PDS 09-4530

Fasteners
Mule-Hide 2.4" Seam Plates ..... PDS 09-5110
Mule-Hide 3" Metal Stress Plates ..... PDS 09-5115
Mule-Hide Drill Point Fasteners ..... PDS 09-5220
Mule-Hide HD-14 Heavy Duty Fasteners ..... PDS 09-5225
Mule-Hide HD-15 Heavy Duty Fasteners ..... PDS 09-5230

Accessories
Mule-Hide All Purpose Bar ..... PDS 09-6105
Mule-Hide Poly ISO 1 Roof Insulation ..... PDS 09-6210
Mule-Hide Poly ISO 2™ Roof Insulation ..... PDS 09-6215
Mule-Hide Poly ISO1-HD Cover Board ..... PDS 09-6220
Georgia-Pacific Dens Deck Prime ..... PDS 09-6290
USG Securock Gypsum-Fiber Roof Board ..... PDS 09-6292
Mule-Hide Walkway Pads ..... PDS 09-6415
Mule-Hide Rubber Paver Blocks ..... PDS 09-6450
Mule-Hide Yellow Warning Strip ..... PDS 09-6490
HP Protection Mat ..... PDS 90-6505

Please consult the Mule-Hide website for the most current information at www.mulehide.com

Mule-Hide Products Co., Inc.
1195 Prince Hall Dr.
Beloit, WI 53511

MULE-HIDE .045" and .060" STANDARD BLACK EPDM MEMBRANE

PRODUCT DESCRIPTION

Mule-Hide Standard Black EPDM membranes are high performance non-reinforced membranes that stand up to tearing, impacts, punctures and normal roof traffic. The elastomeric properties of the EPDM membranes compensate for thermal shock and building movement. EPDM membranes provide excellent resistance to ozone and aging. The EPDM membranes are manufactured in accordance with the guidelines established by the RMA (Rubber Manufacturers Association) and meet or exceed the ASTM Standard Specification D 4637, Type I. **Mule-Hide Standard Black EPDM membranes are Fire Retardant (FR) membranes specially formulated to inhibit spread of flame and meet or exceed code body testing criteria for fire retardant roofing membranes.**

Mule-Hide Standard Black EPDM membranes are available with in-seam tape that is pre-applied to the sheet

BASIC USES

Can be used as a elastomeric single-ply roofing membrane for new construction and re-roofing applications. May be installed in Ballasted and Fully Adhered roofing systems.

SPECIFICATIONS – Mule-Hide .045" and .060" thick Standard Black EPDM Membranes.

Physical Properties	Test Method	Standards	Typical Values	
			.045	.060
Tolerance on Nominal Thickness, %	ASTM D 412	± 10	± 10	± 10
Weight, lbm/ft^2 (kg/m^2)			0.29 (1.4)	0.39 (1.9)
Tensile Strength, min, psi(Mpa)	ASTM D 412	1305 (9)	1600 (11.0)	1600 (11.0)
Elongation, Ultimate, min, %	ASTM D 412	300	480	465
Tear Strength, min, lbf/in (kN/m) - (Die C)	ASTM D 624	150 (26.3)	200 (35.0)	200 (35.0)
Factory Seam Strength, min.	ASTM D 816 (Modified)	Membrane Rupture	Membrane Rupture	Membrane Rupture
Resistance to Heat Aging* Properties after 4 weeks @ 240°F(116°C) Tensile Strength, min, psi(MPa) Elongation, Ultimate, min, % Tear Resistance, min, lbf/in(kN/m) Linear Dimensional Change, max, %	ASTM D 573 ASTM D 412 ASTM D 412 ASTM D 624 ASTM D 1204	 1205(8.3) 200 125(21.9) ± 1.0	 1500(10.3) 225 215 (37.6) -0.4	 1450(10.0) 280 215 (37.6) -0.5
Ozone Resistance* Conditions after exposure 100 pphm Ozone in air for 168 hrs @ 104°F(40°C) Specimen is at 50% strain	ASTM D 1149	No Cracks	No Cracks	No Cracks
Brittleness Temp., max, deg. F (deg.C)	ASTM D 746	-49 (-45)	-49 (-45)	-49 (-45)
Resistance to Water Absorption* After 7 days immersion @ 158°F (70°C), Change in mass, max, %	ASTM D 471	+8, -2	+2.0	+2.0
Water Vapor Permeability* MAX. perm mils	ASTM E 96 (Proc. B or BW)	0.10	0.05	0.03
Resistance to Outdoor (Ultraviolet) Weathering - Xenon-Arc, exposure, 0.70 W/m^2 irradiance,176°F (80°C) black panel temperature	ASTM G 155	No Cracks No Crazing 7,560 kJ/m^2 3,000 hours	No Cracks No Crazing 41,580 kJ/m^2 16,500 hours	No Cracks No Crazing 41,580 kJ/m^2 16,500 hours
At 0.35 W/m^2 irradiance,176°F (80°C) black panel temperature		6,000 hours	33,000 hours	33,000 hours
*Not a Quality Control Test due to the time required for the test or the complexity of the test. However, all tests run on a statistical basis to ensure overall long-term performance of the sheeting.				
Typical properties and characteristics are based on samples tested and are not guaranteed for all samples of this product. This data and information is intended as a guide and does not reflect the specification range for any particular property of this product.				

MULE-HIDE .045" and .060" STANDARD BLACK EPDM MEMBRANE

LEED Information

Recycle Content – Pre-consumer	5%
Recycle Content – Post-consumer	0%
Manufacturing Location	Carlisle, PA Greenville, IL
Solar Reflectance Index	9

PACKAGING

Standard Black EPDM (with and with-out tape) are available in a variety of sizes with widths up to 50' and lengths up to 150' long. Contact Mule-Hide Products for specific rolls sizes available.

BENEFITS & SUPPLEMENTAL STATEMENTS

- Can be installed over a variety of roof decks
- Outstanding weatherability
- Sheets can be pre-taped
- Requires no special equipment to install
- Available as a lightweight system
- Full line of pre-taped accessories available

CODE APPROVALS/COMPLIANCE

A variety of Factory Mutual Ratings, Underwriters Laboratories Classifications and Miami-Dade Approvals are available. Contact Mule-Hide Warranty Department for additional information. Meets or exceeds requirements of ASTM D 4637, Type I for non-reinforced EPDM single-ply roofing membranes.

INSTALLATION INSTRUCTIONS

1) Fully Adhered Roofing System
   a) Approved insulation shall be attached to the roof deck with an approved insulation adhesive or approved fasteners and plates.
   b) The field of the roof is fully adhered to the substrate with Mule-Hide Bonding Adhesive.
2) Ballasted Roofing System
   a) Approved insulation to be loosely laid to the deck.
   b) Roofing membrane is loosely laid over insulation and ballasted with washed river rock or pavers.
3) The membrane is required to be mechanically attached at the base of all vertical surfaces, roof edges, and angle changes greater than 2:12.
4) All seams are to be constructed with seam tape and tape primer, and checked for voids.
5) All details will be done in accordance with Mule-Hide details.
6) On projects where a Mule-Hide Standard or Premium Warranty is requested, an authorized Mule-Hide representative shall inspect all completed work. This is only a brief summary and not the complete specification. The Mule-Hide Specifications, Details, Technical Bulletins, and associated documents should be thoroughly reviewed prior to starting any project. Contact Mule-Hide Products for additional information.

STORAGE & HANDLING

- Use proper stacking procedures to ensure sufficient stability of the materials.
- Surfaces may be slippery when wet, or due to frost and ice build-up. Exercise caution to prevent falls.
- Exercise care when working near edge of roof.
- Store Mule-Hide membrane in original wrappings in a cool, shaded area. Cover with light colored, breathable, waterproof tarpaulins.
- Pre-Taped membranes should not be exposed to prolonged jobsite storage temperatures in excess of 90ºF (32ºC), otherwise the shelf life of the Pre-Tape may be affected.
- When using pre-taped membranes in warm, sunny weather, shade the tape end of the rolls until ready to use.

MULE-HIDE .045" and .060" STANDARD BLACK EPDM MEMBRANE

PROTECTION & SAFETY

Mule-Hide maintains Material Safety Data Sheets on all of its products. Material Safety Data Sheets contain health and safety information for your development of appropriate product handling procedures to protect your employees and customers. Mule-Hide's Material Safety Data Sheets should be read and understood by all of your supervisory personnel and employees before using Mule-Hide products in your facilities.

ADDITIONAL INFORMATION

The information given on this PDS is subject to change without notice. Always check the Mule-Hide website at www.mulehide.com for the latest information, changes and updates or contact Mule-Hide Products Company at 800-786-1492.

DISCLAIMER

The statements provided concerning the material shown are intended as a guide for material usage and are believed to be true and accurate at the time of printing. No statement made by anyone may supersede this information, except when done in writing by Mule-Hide Products Co., Inc. Since the manner of use is beyond our control, Mule-Hide does not authorize anyone to make any warranty of merchantability or fitness for any particular purpose or any other warranty, guarantee or representation, expressed or implied, concerning this material. This product may be eligible for a Mule-Hide warranty, please check the Mule-Hide website at www.mulehide.com or contact Mule-Hide directly at 800-786-1492 for details. Buyer and user accept the product under these conditions and assume the risk of any failure, any injury person or property (including that of the user), loss or liability resulting from the handling, storage or use of the product whether or not it is handled, stored or used in accordance with the directions or specifications. Mule-Hide must be notified in writing of any claims and be given the opportunity to inspect the alleged failure before repairs are made.

Mule-Hide Products Co., Inc.
1195 Prince Hall Dr.
Beloit, WI 53511

PRODUCT DATA SHEET
PDS 09-1310
Revision Date: June 2013

MULE-HIDE 0.060" and 0.090" FR EPDM MEMBRANE (Pre-Cleaned)

PRODUCT DESCRIPTION

Mule-Hide 60 and 90 mil thick FR EPDM membranes (Pre-Cleaned) are high performance non-reinforced membrane that stands up to tearing, impacts, punctures and normal roof traffic. The elastomeric properties of the EPDM membrane compensate for thermal shock and building movement. EPDM membranes provide excellent resistance to ozone and aging. The membrane is manufactured in accordance with the guidelines established by the RMA (Rubber Manufacturers Association) and meets or exceeds the ASTM Standard Specification D 4637. Fire Retardant (FR) EPDM membranes are specially formulated to inhibit spread of flame and meet or exceed code body testing criteria for fire retardant roofing membranes.

Mule-Hide EPDM (Pre-Cleaned) membranes are available with in-seam tape that is pre-applied to the sheet

BASIC USES

Can be used as a elastomeric single-ply roofing membrane for new construction and re-roofing applications. Pre-Cleaned 60 and 90 mil membranes are used primarily in Fully Adhered roofing systems, but can also be Ballasted.

SPECIFICATIONS Mule-Hide 60-mil and 90-mil Thick FR EPDM Membranes (Pre-Cleaned)

Physical Properties	Test Method	Specification	Typical
Tolerance on Nominal Thickness, %	ASTM D 412	± 10	± 10
Weight, lbm/ft^2 (kg/m^2) .060 .090			 0.35 (1.7) 0.59 (2.9)
Tensile Strength, min, psi(Mpa)	ASTM D 412	1305 (9)	1600 (11.0)
Elongation, Ultimate, min, %	ASTM D 412	300	465
Tear Strength, min, lbf/in (kN/m) - (Die C)	ASTM D 624	150 (26.3)	200 (35.0)
Factory Seam Strength, min.	ASTM D 816 (Modified)	Membrane Rupture	Membrane Rupture
Resistance to Heat Aging* Properties after 4 weeks @ 240°F(116°C) Tensile Strength, min, psi(MPa) Elongation, Ultimate, min, % Tear Resistance, min, lbf/in(kN/m) Linear Dimensional Change, max, %	ASTM D 573 ASTM D 412 ASTM D 412 ASTM D 624 ASTM D 1204	 1205(8.3) 200 125(21.9) ± 1.0	 1450(10.0) 280 215 (37.6) -0.5
Ozone Resistance* Conditions after exposure 100 pphm Ozone in air for 168 hrs @ 104°F(40°C) Specimen is at 50% strain	ASTM D 1149	No Cracks	No Cracks
Brittleness Temp., max, deg. F (deg.C)	ASTM D 746	-49 (-45)	-49 (-45)
Resistance to Water Absorption* After 7 days immersion @ 158°F (70°C), Change in mass, max, %	ASTM D 471	+8, -2	+2.0
Water Vapor Permeability* MAX. perm mils	ASTM E 96 (Proc. B or BW)	0.10	0.03
Flexibility / Torsion DMA @ -40ºF	ASTM D5279	N/A	225 MPa
Resistance to Outdoor (Ultraviolet) Weathering Xenon-Arc, total irradiate exposure at 0.70 W/m^2 irradiance,176°F (80°C) black panel temperature	ASTM G 155	No Cracks No Crazing 7,560 kJ/m^2 3,000 hours	No Cracks No Crazing 41,580 kJ/m^2 16,500 hours
At 0.35 W/m^2 irradiance, 176°F (80°C) black panel temperature		6,000 hours	33,000 hours

--See continued on next page--

MULE-HIDE 0.060” and 0.090” FR EPDM MEMBRANE (Pre-Cleaned)

SPECIFICATIONS (Continued)

*Not a Quality Control Test due to the time required for the test or complexity of the test. However, all tests are run on a statistical basis to ensure overall long-term performance of the sheeting.
Typical properties and characteristics are based on samples tested and are not guaranteed for all samples of this product. This data and information is intended as a guide and does not reflect the specification range for any particular property of this product.

LEED Information

Recycle Content – Pre-consumer	5%
Recycle Content – Post-consumer	0%
Manufacturing Locations	Carlisle, PA Greenville, IL
Solar Reflectance Index	9

PACKAGING

Mule-Hide 0.060” and 0.090” FR EPDM Membranes (with and with-out tape) are available in a variety of sheet sizes with widths up to 40’ and lengths up to 100’ long. Contact Mule-Hide Products for specific sheet sizes.

BENEFITS & SUPPLEMENTAL STATEMENTS

- Can be installed over a variety of roof decks
- Outstanding weatherability
- Sheets can be pre-taped
- Requires no special equipment to install
- Available as a lightweight system
- Full line of pre-taped accessories available

CODE APPROVALS/COMPLIANCE

A variety of Factory Mutual Ratings, Underwriters Laboratories Classifications and Miami-Dade Approvals are available. Contact Mule-Hide Warranty Department for additional information. Meets or exceeds requirements of ASTM D 4637 for Type 1 non-reinforced EPDM single-ply roofing membranes.

INSTALLATION INSTRUCTIONS

1) Fully Adhered Roofing System
   a) Approved insulation shall be attached to the roof deck with an approved insulation adhesive or approved fasteners and plates.
   b) The field of the roof is fully adhered to the substrate with Mule-Hide Bonding Adhesive.
2) Ballasted Roofing System
   a) Approved insulation to be loosely laid to the deck.
   b) Roofing membrane is loosely laid over insulation and ballasted with washed river rock or pavers.
3) The membrane is required to be mechanically attached at the base of all vertical surfaces, roof edges, and angle changes greater than 2:12.
4) All seams are to be constructed with seam tape and tape primer, and checked for voids.
5) All details will be done in accordance with Mule-Hide details.
6) On projects where a Mule-Hide Standard or Premium Warranty is requested, an authorized Mule-Hide representative shall inspect all completed work. This is only a brief summary and not the complete specification. The Mule-Hide Specifications, Details, Technical Bulletins, and associated documents should be thoroughly reviewed prior to starting any project. Contact Mule-Hide Products for additional information.

MULE-HIDE 0.060" and 0.090" FR EPDM MEMBRANE (Pre-Cleaned)

STORAGE & HANDLING

- Use proper stacking procedures to ensure sufficient stability of the materials.
- Surfaces may be slippery when wet, or due to frost and ice build-up. Exercise caution to prevent falls.
- Exercise care when working near edge of roof.
- Store Mule-Hide membrane in original wrappings in a cool, shaded area. Cover with light colored, breathable, waterproof tarpaulins.
- Pre-Taped membranes should not be exposed to prolonged jobsite storage temperatures in excess of 90ºF (32ºC), otherwise the shelf life of the Pre-Tape may be affected.
- When using pre-taped membranes in warm, sunny weather, shade the tape end of the rolls until ready to use.

PROTECTION & SAFETY

Mule-Hide maintains Material Safety Data Sheets on all of its products. Material Safety Data Sheets contain health and safety information for your development of appropriate product handling procedures to protect your employees and customers. Mule-Hide's Material Safety Data Sheets should be read and understood by all of your supervisory personnel and employees before using Mule-Hide products in your facilities.

ADDITIONAL INFORMATION

The information given on this PDS is subject to change without notice. Always check the Mule-Hide website at www.mulehide.com for the latest information, changes and updates or contact Mule-Hide Products Company at 800-786-1492.

DISCLAIMER

The statements provided concerning the material shown are intended as a guide for material usage and are believed to be true and accurate at the time of printing. No statement made by anyone may supersede this information, except when done in writing by Mule-Hide Products Co., Inc. Since the manner of use is beyond our control, Mule-Hide does not authorize anyone to make any warranty of merchantability or fitness for any particular purpose or any other warranty, guarantee or representation, expressed or implied, concerning this material. This product may be eligible for a Mule-Hide warranty, please check the Mule-Hide website at www.mulehide.com or contact Mule-Hide directly at 800-786-1492 for details. Buyer and user accept the product under these conditions and assume the risk of any failure, any injury person or property (including that of the user), loss or liability resulting from the handling, storage or use of the product whether or not it is handled, stored or used in accordance with the directions or specifications. Mule-Hide must be notified in writing of any claims and be given the opportunity to inspect the alleged failure before repairs are made.

Mule-Hide Products Co., Inc.
1195 Prince Hall Dr.
Beloit, WI 53511

MULE-HIDE STANDARD AND FR REINFORCED EPDM MEMBRANES

PRODUCT DESCRIPTION

Mule-Hide Standard Reinforced EPDM is a high performance reinforced membrane that stands up to tearing, impacts, punctures and normal roof traffic. The elastomeric properties of the EPDM membrane compensate for thermal shock and building movement. EPDM membranes provide excellent resistance to ozone and aging. The membrane is manufactured in accordance with the guidelines established by the RMA (Rubber Manufacturers Association) and meets or exceeds the ASTM Standard Specification D 4637, Type II. Fire retardant (FR) membranes are specially formulated to inhibit spread of flame and meet or exceed code body testing criteria for fire retardant roofing membranes.

Mule-Hide STANDARD and FR REINFORCED EPDM membranes are available with in-seam tape that is pre-applied to the sheet. See below for sizes available.

BASIC USES

The Standard and FR Reinforced EPDM membrane is used in mechanically attached and fully adhered roofing systems in new construction, reroofing and recover (retrofit) applications. It may also be used as flexible membrane flashings for walls, curbs, etc, when installing an EPDM membrane roofing systems. The system must be installed over acceptable roof insulation or other suitable substrate. See the Mule-Hide EPDM Specifications Manual for complete specifications and details.

SPECIFICATIONS

Physical Properties	**Test Method**	**SPEC. (Pass)**	**Typical Standard**
Tolerance on Nominal Thickness, %	ASTM D 751	± 10	± 10
Thickness Over Scrim, min, in.(mm) .045 .060 .075	ASTM D 4637 Annex	0.015 (0.381)	 0.016 (0.406) 0.020 (0.508) 0.032 (0.810)
Weight, lbm/ft^2 (kg/m^2) .045 .060 .075			 0.27 (1.3) 0.39 (1.9) 0.48 (2.3)
Elongation, Ultimate, min, % .045 & .060 .075	ASTM D 412 Die C	250**	 480** 500**
Tear Strength min, lbf (N) .045, .060 & .075	ASTM D 751 B Tongue Tear	10 (45)	70 (311)
Breaking Strength, min, lbf(N) .045, .060 .075	ASTM D 751 (Grab Method)	90(400)	140(623) 144 (787)
Factory Seam Strength, min.	ASTM D 816 (Modified)	Membrane Rupture	Membrane Rupture
Brittleness point, max, deg.F (deg.C)*	ASTM D 2137	-49(-45)	-49(-45)
Resistance to Heat Aging* Properties after 4 weeks @ 240°F(116°C) Breaking Strength, min, lbf(N) Elongation, Ultimate, min, % Linear Dimensional Change, max, %	ASTM D 573 ASTM D 751 ASTM D 412 Die C ASTM D 1204	 80(355) 200** ± 1.0	 182 (823) 250** -1.0
Ozone Resistance* Conditions after exposure 100 pphm Ozone in air for 168 hrs @ 104°F(40°C) Specimen wrapped around 3 inch mandrel	ASTM D 1149	No Cracks	No Cracks
Resistance to Water Absorption* After 7 days immersion @ 158°F (70°C), Change in mass, max, %	ASTM D 471	+8, -2**	5.5**

Continued on next page

MULE-HIDE STANDARD AND FR REINFORCED EPDM MEMBRANES

SPECIFICATIONS - Continued

Resistance to Outdoor (Ultraviolet) Weathering - Xenon-Arc, exposure, 0.70 W/m^2 irradiance,176°F (80°C) black panel temperature	ASTM G 155	No Cracks No Crazing 7,560 kJ/m^2 3,000 hours	No Cracks No Crazing 33,320 kJ/m^2 14,000 hours
At 0.35 W/m^2 irradiance,176°F (80°C) black panel temperature		6,000 hours	28,000 hours
*Not a Quality Control Test due to the time required for the test or the complexity of the test. However, all tests run on a statistical basis to ensure overall long-term performance of the sheeting.			
**Specimens to be prepared from coating rubber compound, vulcanized in a similar method to the reinforced product.			
Typical properties and characteristics are based on samples tested and are not guaranteed for all samples of this product. This data and information is intended as a guide and does not reflect the specification range for any particular property of this product.			

LEED Information

Recycle Content – Pre-consumer	0%
Recycle Content – Post-consumer	0%
Manufacturing Location	Carlisle, PA
Solar Reflectance Index	9

PACKAGING

Mule-Hide Standard and FR Reinforced EPDM Membranes (with and with-out tape) are available in a variety of sizes with widths up to 10' and lengths up to 100' long. Contact Mule-Hide Products for available roll sizes.

BENEFITS & SUPPLEMENTAL STATEMENTS

- Economical system
- Ease of Installation
- Outstanding Weatherability
- Lightweight
- Can eliminate tear-off of existing roof if appropriate.

CODE APPROVALS/COMPLIANCE

A variety of Factory Mutual Ratings and Underwriter Laboratory Classifications are available. Contact Mule-Hide Technical Department for additional information. Meets or exceeds ASTM D4637, Type II for reinforced EPDM single-ply membranes.

INSTALLATION INSTRUCTIONS

1) Approved insulation shall be attached to the roof deck with an approved insulation adhesive or approved fasteners and plates. Install insulation with its largest dimension perpendicular to the direction of the membrane seams where possible.
2) Mechanically Attached Roofing System
   a) Perimeter sheets to be installed in an approved pattern along all exterior roof edges.
   b) Mechanical fasteners and plates are installed in the seams of both the perimeter sheets and field sheets and into the roof deck. Use approved fasteners and maintain proper penetration for specific roof deck.
3) Fully Adhered Roofing System
   a) Perimeter sheets are not required.
   b) The membrane is required to be mechanically attached at the base of all vertical surfaces, roof edges, and angle changes.
   c) The field of the roof is fully adhered to the substrate with Mule-Hide EPDM Bonding Adhesive.
4) All seams are made with Mule-Hide Tape Primer and In-Seam Tape.
5) All details will be done in accordance with Mule-Hide details.

MULE-HIDE STANDARD AND FR REINFORCED EPDM MEMBRANES

INSTALLATION INSTRUCTIONS - Continued

6) On projects where a Mule-Hide Standard or Premium Warranty is requested, an authorized Mule-Hide representative shall inspect all completed work. This is only a brief summary and not the complete specification. Mule-Hide Specifications, Details, Technical Bulletins, and associated documents should be thoroughly reviewed prior to starting any project. Contact Mule-Hide Products for additional information.

PRECAUTIONS

- Use proper stacking procedures to ensure sufficient stability of the materials.
- Surfaces may be slippery when wet, or due to frost and ice build-up. Exercise caution to prevent falls.
- Exercise care when working near edge of roof.
- Store Mule-Hide membrane in original wrappings in a cool, shaded area. Cover with light colored, breathable, waterproof tarpaulins.
- Pre-Taped membranes should not be exposed to prolonged jobsite storage temperatures in excess of 90ºF (32ºC), otherwise the shelf life of the Pre-Tape may be affected.
- When using pre-taped membranes in warm, sunny weather, shade the tape end of the rolls until ready to use.

PROTECTION & SAFETY

Mule-Hide maintains Material Safety Data Sheets on all of its products. Material Safety Data Sheets contain health and safety information for your development of appropriate product handling procedures to protect your employees and customers. Mule-Hide's Material Safety Data Sheets should be read and understood by all of your supervisory personnel and employees before using Mule-Hide products in your facilities.

ADDITIONAL INFORMATION

The information given on this PDS is subject to change without notice. Always check the Mule-Hide website at www.mulehide.com for the latest information, changes and updates or contact Mule-Hide Products Company at 800-786-1492.

DISCLAIMER

The statements provided concerning the material shown are intended as a guide for material usage and are believed to be true and accurate at the time of printing. No statement made by anyone may supersede this information, except when done in writing by Mule-Hide Products Co., Inc. Since the manner of use is beyond our control, Mule-Hide does not authorize anyone to make any warranty of merchantability or fitness for any particular purpose or any other warranty, guarantee or representation, expressed or implied, concerning this material. This product may be eligible for a Mule-Hide warranty, please check the Mule-Hide website at www.mulehide.com or contact Mule-Hide directly at 800-786-1492 for details. Buyer and user accept the product under these conditions and assume the risk of any failure, any injury person or property (including that of the user), loss or liability resulting from the handling, storage or use of the product whether or not it is handled, stored or used in accordance with the directions or specifications. Mule-Hide must be notified in writing of any claims and be given the opportunity to inspect the alleged failure before repairs are made.

Mule-Hide Products Co., Inc.
1195 Prince Hall Dr.
Beloit, WI 53511

PRODUCT DATA SHEET
PDS 09-1330
Revision Date: June 2013

MULE-HIDE WHITE-ON-BLACK 60-mil EPDM MEMBRANE

PRODUCT DESCRIPTION

Mule-Hide 60-mil White-on-Black EPDM is a high performance non-reinforced membrane that stands up to tearing, impacts, punctures and normal roof traffic. The elastomeric properties of the EPDM membrane compensate for thermal shock and building movement. EPDM membranes provide excellent resistance to ozone and aging. The membrane is manufactured in accordance with the guidelines established by the RMA (Rubber Manufacturers Association) and meets or exceeds the ASTM Standard Specification D 4637, Type I.

Mule-Hide 60-mil White-on-Black EPDM membrane is available with in-seam tape that is pre-applied to the sheet.

BASIC USES

The White-on-Black 60-mil EPDM membrane is used in fully adhered roofing systems in new construction, reroofing and recover (retrofit) applications. It may also be used as flexible membrane flashings for walls, curbs, etc, when installing EPDM membrane roofing systems. The system must be installed over an acceptable roof insulation or other suitable substrate. See the Mule-Hide Specifications Manual for complete specifications and details.

SPECIFICATIONS

Physical Properties	Test Method	SPEC (Pass)	Typical Values
Tolerance on Nominal Thickness, %	ASTM D 412	± 10	± 10
Weight, lbm/ft^2 (kg/m^2)			0.37 (1.8)
Tensile Strength, min, psi(Mpa)	ASTM D 412	1305 (9)	1465 (10.1)
Elongation, Ultimate, min, %	ASTM D 412	300	540
Tear Strength, min, lbf/in (kN/m)	ASTM D 624 (Die C)	150 (26.3)	187 (32.7)
Factory Seam Strength, min.	ASTM D 816 Modified	Membrane Rupture	Membrane Rupture
Resistance to Heat Aging* Properties after 1 weeks @ 240°F(116°C) Tensile Strength, min, psi(MPa) Elongation, Ultimate, min, % Tear Resistance, min,lbf/in(kN/m) Linear Dimensional Change, max, %	ASTM D 573 ASTM D 412 ASTM D 412 ASTM D 624 ASTM D 1204	 1205 (8.3) 200 125 (21.9) ± 1.0	 1345 (9.3) 280 185 (32.4) -0.2
Ozone Resistance* Conditions after exposure 100 pphm Ozone in air for 168 hrs @ 104°F(40°C) Specimen is at 50% strain	ASTM D 1149	No Cracks	No Cracks
Brittleness Temp., max, deg. F (deg.C)*	ASTM D 746	-49 (-45)	-67 (-55)
Resistance to Water Absorption* After 7 days immersion @ 158°F (70°C), Change in mass, max, %	ASTM D 471	+8, -2	+3.3
Water Vapor Permeability* max, perm-mils	ASTM E 96 (Proc. B or BW)	0.10	0.02
Flexibility / Torsion DMA @ -40ºF	ASTM D5279	N/A	225 MPa
Resistance to Outdoor (Ultraviolet) Weathering Xenon-Arc, total irradiate exposure at 0.70 W/m^2 irradiance,176°F (80°C) black panel temperature	ASTM D 4637 Conditions	No Cracks No Crazing 7,560 kJ/m^2 3,000 hours	No Cracks No Crazing 25,200 kJ/m^2 10,000 hours
At 0.35 W/m^2 irradiance, 176°F (80°C) black panel temperature		6,000 hours	20,000 hours
*Not a Quality Control Test due to the time required for the test or complexity of the test. However, all tests are run on a statistical basis to ensure overall long-term performance of the sheeting.			
Typical properties and characteristics are based on samples tested and are not guaranteed for all samples of this product. This data and information is intended as a guide and does not reflect the specification range for any particular property of this product.			

MULE-HIDE WHITE-ON-BLACK 60-mil EPDM MEMBRANE

LEED Information

Recycle Content – Pre-consumer	0%
Recycle Content – Post-consumer	0%
Manufacturing Location	Carlisle, PA
Solar Reflectance Index	105

PACKAGING

Mule-Hide White-on-Black membranes (with and with-out tape) are available in a variety of sheet sizes with widths up to 50' and lengths up to 100' long. Contact Mule-Hide Products for specific roll sizes.

BENEFITS & SUPPLEMENTAL STATEMENTS

- Quality System
- Ease of Installation
- Energy efficiency – white color reflects sunlight
- Low temperature flexibility
- Fully adhered system is lightweight

CODE APPROVALS/COMPLIANCE

A variety of Factory Mutual Ratings and Underwriters Laboratories Classifications are available. Contact Mule-Hide Technical Department for additional information. Meets or exceeds requirements of ASTM D4637 for Type I non-reinforced EPDM single-ply roofing membranes.

INSTALLATION INSTRUCTIONS

1) Approved insulation shall be attached to the roof deck with an approved insulation adhesive or approved fasteners and plates. Install insulation with its largest dimension perpendicular to the direction of the membrane seams where possible.
2) Fully Adhered Roofing System
   a) The membrane is required to be mechanically attached at the base of all vertical surfaces, roof edges, and angle changes.
   b) The field of the roof is fully adhered to the substrate with Mule-Hide EPDM Bonding Adhesive.
4) Field seams are made with seam tape and tape primer. Pre-taped seams are available for faster installation.
5) All details will be done in accordance with Mule-Hide details.
6) On projects where a Mule-Hide Standard or Premium Warranty is requested, an authorized Mule-Hide representative shall inspect all completed work. This is only a brief summary and not the complete specification. The Mule-Hide Specifications, Details, Technical Bulletins, and associated documents should be thoroughly reviewed prior to starting any project. Contact Mule-Hide Products for additional information.

PRECAUTIONS

- Surfaces may be slippery when wet, or due to frost and ice build-up. Exercise caution to prevent falls.
- Mule-Hide White-on-Black EPDM membranes are highly reflective to sunlight. Workers should dress appropriately, wear sunscreen, and wear sunglasses that filter out UV light.
- Exercise care when working near roof edge. Roof edges may not be visible when surrounding area is covered with snow.
- Use proper stacking procedures for sufficient stability of materials.
- Pre-taped membranes should not be exposed to prolonged jobsite storage temperatures in excess of 90ºF (32ºC), otherwise the shelf life of the tape may be affected
- When using pre-taped membranes in warm, sunny weather, shade the tape end of the rolls until ready to use.

MULE-HIDE WHITE-ON-BLACK 60-mil EPDM MEMBRANE

PROTECTION & SAFETY

Mule-Hide maintains Material Safety Data Sheets on all of its products. Material Safety Data Sheets contain health and safety information for your development of appropriate product handling procedures to protect your employees and customers. Mule-Hide's Material Safety Data Sheets should be read and understood by all of your supervisory personnel and employees before using Mule-Hide products in your facilities.

SUPPLEMENTAL APPROVALS, STATEMENTS AND CHARACTERISTICS

1) Mule-Hide White-on-Black EPDM meets and exceeds the requirements of **ASTM D4637**[1] Type I Standard Specification for non-reinforced EPDM Sheet Used in Single-Ply Roofing

2) **Radiative Properties** for ENERGY STAR®, Cool Roof Rating Council (CRRC) and LEED™

DESCRIPTION	TEST METHOD	SURE-WHITE EPDM
ENERGY STAR initial solar reflectance	Solar Spectrum Reflectometer	0.76
ENERGY STAR solar reflectance after 3 years	Solar Spectrum Reflectometer (uncleaned)	0.64
ENERGY STAR initial emissivity	ASTM E408	0.90
CRRC initial solar reflectance	ASTM C1549	0.76
CRRC solar reflectance after 3 years	ASTM C1549 (uncleaned)	0.64
CRRC initial thermal emittance	ASTM C1371	0.90
CRRC thermal emittance after 3 years	ASTM C1371 (uncleaned)	0.87
CRRC SRI (Solar Reflectance Index)	ASTM E1980	94
CRRC SRI (Solar Reflectance Index after 3 yrs)	ASTM E1980	77
CRRC Product ID	N/A	0670-0007
LEED thermal emittance	ASTM E408	0.90

3) Mule-Hide White-on-Black EPDM membranes are LEED compliant and are ENERGY STAR® and California Title 24 rated roof products.

An ENERGY STAR qualified low slope roof product must have an initial solar reflectance of at least 0.65 and a 3-year aged solar reflectance of at least 0.50. Cleaning the aged roof surface is not permitted by the ENERGY STAR test protocol. Energy Star is only valid in the United States for Roofing Products.

The Cool Roof Rating Council (CRRC) does not specify minimums for reflectance or emittance but they do require specific protocols for testing and reporting. Cleaning of the aged roof surface is not permitted for determination of radiative properties after 3 years.

A LEED “point” may be earned if a roof material is ENERGY STAR qualified and has a thermal emittance of at least 0.90 as determined by ASTM E408.

Solar Reflectance Index (SRI) is calculated per ASTM E 1980. The SRI is a measure of the roof's ability to reject solar heat, as shown by a small temperature rise. It is defined so that a standard black (reflectance 0.05, emittance 0.90) is 0 and a standard white (reflectance 0.80, emittance 0.90) is 100. Materials with the highest SRI values are the coolest choices for roofing. Due to the way SRI is defined, particularly hot materials can even take slightly negative values, and particularly cool materials can even exceed 100.

California Title 24 requires an initial minimum reflectance of 0.70 and emittance of 0.75 as determined by CRRC.

[1]Copyright © ASTM International, 100 Barr Harbor Drive, West Conshohocken, PA 19428-2959, USA

MULE-HIDE WHITE-ON-BLACK 60-mil EPDM MEMBRANE

ADDITIONAL INFORMATION

The information given on this PDS is subject to change without notice. Always check the Mule-Hide website at www.mulehide.com for the latest information, changes and updates or contact Mule-Hide Products Company at 800-786-1492.

DISCLAIMER

The statements provided concerning the material shown are intended as a guide for material usage and are believed to be true and accurate at the time of printing. No statement made by anyone may supersede this information, except when done in writing by Mule-Hide Products Co., Inc. Since the manner of use is beyond our control, Mule-Hide does not authorize anyone to make any warranty of merchantability or fitness for any particular purpose or any other warranty, guarantee or representation, expressed or implied, concerning this material. This product may be eligible for a Mule-Hide warranty, please check the Mule-Hide website at www.mulehide.com or contact Mule-Hide directly at 800-786-1492 for details. Buyer and user accept the product under these conditions and assume the risk of any failure, any injury person or property (including that of the user), loss or liability resulting from the handling, storage or use of the product whether or not it is handled, stored or used in accordance with the directions or specifications. Mule-Hide must be notified in writing of any claims and be given the opportunity to inspect the alleged failure before repairs are made.

Mule-Hide Products Co., Inc.
1195 Prince Hall Dr.
Beloit, WI 53511

PRODUCT DATA SHEET
PDS 09-1330
Revision Date: Feb 2013

MULE-HIDE WHITE-ON-BLACK EPDM (60-mil and 90-mil)

PRODUCT DESCRIPTION

Mule-Hide White-on-Black EPDM membranes (60-mil and 90-mil) are high performance non-reinforced products that stand up to tearing, impacts, punctures and normal roof traffic. The elastomeric properties of the EPDM sheet compensates for thermal shock and building movement. EPDM membranes provide excellent resistance to ozone and aging. These membranes are manufactured in accordance with the guidelines established by the RMA (Rubber Manufacturers Association) and meet or exceed ASTM Standard Specification D 4637, Type I.

Mule-Hide White-on-Black EPDM membrane is available with pre-applied in-seam tape. See Packaging section below for available sizes.

BASIC USES

Our White-on-Black 60-mil and 90-mil EPDM membranes are used primarily in fully adhered roofing systems on new construction, reroofing and recover (retrofit) applications. The 60-mil membrane may also be used as flexible membrane flashings for walls, curbs, etc, when installing an EPDM membrane roofing systems. The system must be installed over acceptable roof insulation or other suitable substrate. See our Mule-Hide Specifications Manual for complete specifications and details.

SPECIFICATIONS

Physical Properties	Test Method	SPEC (Pass)	Typical Values
Tolerance on Nominal Thickness, %	ASTM D 412	± 10	± 10
Weight, lbm/ft^2 (kg/m^2) 60-mil 90-mil			 0.39 (1.9) 0.60 (2.9)
Tensile Strength, min, psi (Mpa)	ASTM D 412	1305 (9)	1465 (10.1)
Elongation, Ultimate, min, %	ASTM D 412	300	540
Tear Strength, min, lbf/in (kN/m)	ASTM D 624 (Die C)	150 (26.3)	200 (35.0)
Factory Seam Strength, min. (modified)	ASTM D 816	Membrane Rupture	Membrane Rupture
Resistance to Heat Aging* Properties after 1 weeks @ 240°F(116°C) Tensile Strength, min, psi (MPa) Elongation, Ultimate, min, % Tear Resistance, min,lbf/in (kN/m) Linear Dimensional Change, max, %	ASTM D 573 ASTM D 412 ASTM D 412 ASTM D 624 ASTM D 1204	 1205 (8.3) 200 125 (21.9) ± 1.0	 1345 (9.3) 280 185 (32.4) -0.2
Ozone Resistance* Conditions after exposure to 100 pphm Ozone in air for 168 hrs @ 104°F (40°C) Specimen is at 50% strain	ASTM D 1149	No Cracks	No Cracks
Brittleness Temp., max, deg. F (deg.C)*	ASTM D 746	-49 (-45)	-67 (-55)
Resistance to Water Absorption* After 7 days immersion @ 158°F (70°C), Change in mass, max, %	ASTM D 471	+8, -2	+3.3
Water Vapor Permeability* max, perm-mils	ASTM E 96 (Proc. B or BW)	0.10	0.02
Resistance to Outdoor (Ultraviolet) Weathering* Xenon-Arc, total radiant exposure at 0.70 W/m^2 Irradiance,176°F (80°C) black panel temperature	ASTM D 4637 Conditions	No Cracks No Crazing 6560 kJ/m^2	No Cracks No Crazing 25,200 kJ/m^2
*Not a Quality Control Test due to the time required for the test or the complexity of the test. However, all tests run on a statistical basis to ensure overall long-term performance of the sheeting.			

Typical properties and characteristics are based on samples tested and are not guaranteed for all samples of this product. This data and information is intended as a guide and does not reflect the specification or specification range for any particular property of this product.

MULE-HIDE WHITE-ON-BLACK EPDM (60-mil and 90-mil)

PACKAGING

Roll sizes for Mule-Hide 60-mil White-on-Black EPDM membrane are 10' x 50', 10' x 100', 16.5' x 100' and 20' x 100'.
Roll sizes for Mule-Hide 90-mil White-on-Black EPDM membrane are 10' x 50' and 10' x 100'

Roll sizes for pre-taped White-on-Black EPDM membranes are as follows:

Product	Packaging	Roll Size	Tape Width
.060 White-on-Black, Pre-Taped	2 - Pack	10' x 100'	3"
.060 White-on-Black, Pre-Taped, **Wide Roll**	1 - Pack	20' x 100'	3"
.090 White-on-Black, Pre-Taped	2 - Pack	10' x 100'	6"

BENEFITS & SUPPLEMENTAL STATEMENTS

- Quality System
- Ease of Installation
- Energy efficiency – white color reflects sunlight
- Low temperature flexibility
- Fully adhered system is lightweight

CODE APPROVALS/COMPLIANCE

A variety of Factory Mutual Ratings and Underwriters Laboratories Classifications are available. Contact Mule-Hide Technical Department for additional information. Meets or exceeds requirements of ASTM D4637 for Type I non-reinforced EPDM single-ply roofing membranes.

INSTALLATION INSTRUCTIONS

1) Approved insulation shall be attached to the roof deck with an approved insulation adhesive or approved fasteners and plates. Install insulation with its largest dimension perpendicular to the direction of the membrane seams where possible.
2) Fully Adhered Roofing System
   a) The membrane is required to be mechanically attached at the base of all vertical surfaces, roof edges, and angle changes.
   b) The field of the roof is fully adhered to the substrate with Mule-Hide EPDM Bonding Adhesive.
4) Field seams are made with seam tape and tape primer. Pre-taped seams are available for faster installation.
5) All details will be done in accordance with Mule-Hide details.
6) On projects where a Mule-Hide Standard or Premium Warranty is requested, an authorized Mule-Hide representative shall inspect all completed work. This is only a brief summary and not the complete specification. The Mule-Hide Specifications, Details, Technical Bulletins, and associated documents should be thoroughly reviewed prior to starting any project. Contact Mule-Hide Products for additional information.

PRECAUTIONS

- Surfaces may be slippery when wet, or due to frost and ice build-up. Exercise caution to prevent falls.
- Mule-Hide White-on-Black EPDM membranes are highly reflective to sunlight. Workers should dress appropriately, wear sunscreen, and wear sunglasses that filter out UV light.
- Exercise care when working near roof edge. Roof edges may not be visible when surrounding area is covered with snow.
- Store Mule-Hide membrane in original wrappings in a cool, shaded area. Cover with light-colored, breathable, waterproof tarpaulins

PROTECTION & SAFETY

Mule-Hide maintains Material Safety Data Sheets on all of its products. Material Safety Data Sheets contain health and safety information for your development of appropriate product handling procedures to protect your employees and customers. Mule-Hide's Material Safety Data Sheets should be read and understood by all of your supervisory personnel and employees before using Mule-Hide products in your facilities.

MULE-HIDE WHITE-ON-BLACK EPDM (60-mil and 90-mil)

SUPPLEMENTAL APPROVALS, STATEMENTS AND CHARACTERISTICS

1) Mule-Hide White-on-Black EPDM meets and exceeds the requirements of **ASTM D4637**[1] Type I Standard Specification for non-reinforced EPDM Sheet Used in Single-Ply Roofing

2) **Radiative Properties** for ENERGY STAR®, Cool Roof Rating Council (CRRC) and LEED™

DESCRIPTION	TEST METHOD	SURE-WHITE EPDM
ENERGY STAR initial solar reflectance	Solar Spectrum Reflectometer	0.76
ENERGY STAR solar reflectance after 3 years	Solar Spectrum Reflectometer (uncleaned)	0.64
ENERGY STAR initial emissivity	ASTM E408	0.90
CRRC initial solar reflectance	ASTM C1549	0.76
CRRC solar reflectance after 3 years	ASTM C1549 (uncleaned)	0.64
CRRC initial thermal emittance	ASTM C1371	0.90
CRRC thermal emittance after 3 years	ASTM C1371 (uncleaned)	0.87
CRRC SRI (Solar Reflectance Index)	ASTM E1980	94
CRRC SRI (Solar Reflectance Index after 3 yrs)	ASTM E1980	77
CRRC Product ID	N/A	0670-0007
LEED thermal emittance	ASTM E408	0.91

3) Mule-Hide White-on-Black EPDM membranes are LEED compliant and are ENERGY STAR® and California Title 24 rated roof products.

An ENERGY STAR qualified low slope roof product must have an initial solar reflectance of at least 0.65 and a 3-year aged solar reflectance of at least 0.50. Cleaning the aged roof surface is not permitted by the ENERGY STAR test protocol. Energy Star is only valid in the United States for Roofing Products.

The Cool Roof Rating Council (CRRC) does not specify minimums for reflectance or emittance but they do require specific protocols for testing and reporting. Cleaning of the aged roof surface is not permitted for determination of radiative properties after 3 years.

A LEED "point" may be earned if a roof material is ENERGY STAR qualified and has a thermal emittance of at least 0.90 as determined by ASTM E408.

Solar Reflectance Index (SRI) is calculated per ASTM E 1980. The SRI is a measure of the roof's ability to reject solar heat, as shown by a small temperature rise. It is defined so that a standard black (reflectance 0.05, emittance 0.90) is 0 and a standard white (reflectance 0.80, emittance 0.90) is 100. Materials with the highest SRI values are the coolest choices for roofing. Due to the way SRI is defined, particularly hot materials can even take slightly negative values, and particularly cool materials can even exceed 100.

California Title 24 requires an initial minimum reflectance of 0.70 and emittance of 0.75 as determined by CRRC.

[1]Copyright © ASTM International, 100 Barr Harbor Drive, West Conshohocken, PA 19428-2959, USA

ADDITIONAL INFORMATION

The information given on this PDS is subject to change without notice. Always check the Mule-Hide website at www.mulehide.com for the latest information, changes and updates or contact Mule-Hide Products Company at 800-786-1492.

MULE-HIDE WHITE-ON-BLACK EPDM (60-mil and 90-mil)

DISCLAIMER

The statements provided concerning the material shown are intended as a guide for material usage and are believed to be true and accurate at the time of printing. No statement made by anyone may supersede this information, except when done in writing by Mule-Hide Products Co., Inc. Since the manner of use is beyond our control, Mule-Hide does not authorize anyone to make any warranty of merchantability or fitness for any particular purpose or any other warranty, guarantee or representation, expressed or implied, concerning this material. This product may be eligible for a Mule-Hide warranty, please check the Mule-Hide website at www.mulehide.com or contact Mule-Hide directly at 800-786-1492 for details. Buyer and user accept the product under these conditions and assume the risk of any failure, any injury person or property (including that of the user), loss or liability resulting from the handling, storage or use of the product whether or not it is handled, stored or used in accordance with the directions or specifications. Mule-Hide must be notified in writing of any claims and be given the opportunity to inspect the alleged failure before repairs are made.

Mule-Hide Products Co., Inc.
1195 Prince Hall Dr.
Beloit, WI 53511

PRODUCT DATA SHEET
PDS 09-1335
Revision Date: February 2013

MULE-HIDE WHITE-ON-BLACK 45-mil EPDM MEMBRANE

PRODUCT DESCRIPTION

Mule-Hide 45-mil White-on-Black EPDM is a high performance non-reinforced membrane that stands up to tearing, impacts, punctures and normal roof traffic. The elastomeric properties of the EPDM membrane compensate for thermal shock and building movement. EPDM membranes provide excellent resistance to ozone and aging. The membrane is manufactured in accordance with the guidelines established by the RMA (Rubber Manufacturers Association) and meets or exceeds the ASTM Standard Specification D 4637, Type I.

BASIC USES

The White-on-Black 45-mil EPDM membrane is used in fully adhered roofing systems for Modular Building Construction only. The system must be installed over an acceptable roof insulation or other suitable substrate. See the Mule-Hide Specifications Manual for complete specifications and details.

SPECIFICATIONS

Available roll sizes for Mule-Hide 45-mil White-on-Black EPDM membrane are;
Widths: 11', 13' 15' and 17'
Lengths: 305'

Physical Properties	Test Method	SPEC (Pass)	Typical Values
Tolerance on Nominal Thickness, %	ASTM D 412	± 10	± 10
Weight, lbm/ft^2 (kg/m^2)			0.29 (1.43)
Tensile Strength, min, psi (Mpa)	ASTM D 412	1305 (9)	1685 (11.6)
Elongation, Ultimate, min, %	ASTM D 412	300	420
Tear Strength, min, lbf/in (kN/m)	ASTM D 624 (Die C)	150 (26.3)	200 (35.0)
Factory Seam Strength, min.	ASTM D 816 Modified	Membrane Rupture	Membrane Rupture
Resistance to Heat Aging*	ASTM D 573		
Properties after 1 weeks @ 240°F (116°C)			
Tensile Strength, min, psi(MPa)	ASTM D 412	1205 (8.3)	1550 (10.7)
Elongation, Ultimate, min, %	ASTM D 412	200	250
Tear Resistance, min,lbf/in (kN/m)	ASTM D 624	125 (21.9)	185 (32.4)
Linear Dimensional Change, max, %	ASTM D 1204	± 1.0	-0.5
Ozone Resistance* Conditions after exposure 100 pphm Ozone in air for 168 hrs @ 104°F(40°C) Specimen is at 50% strain	ASTM D 1149	No Cracks	No Cracks
Brittleness Temp., max, deg. F (deg.C)*	ASTM D 746	-49 (-45)	-67 (-55)
Resistance to Water Absorption* After 7 days immersion @ 158°F (70°C), Change in mass, max, %	ASTM D 471	+8, -2	+3.6
Water Vapor Permeability* max, perm-mils	ASTM E 96 (Proc. B or BW)	0.10	0.05
Resistance to Outdoor (Ultraviolet) Weathering Xenon-Arc, 4000 hrs. exposure, 176°F (80°C) black panel temperature	ASTM D 4637 Conditions	No Cracks No Crazing	No Cracks No Crazing
*Not a Quality Control Test due to the time required for the test or the complexity of the test. However, all tests run on a statistical basis to ensure overall long-term performance of the sheeting.			

Typical properties and characteristics are based on samples tested and are not guaranteed for all samples of this product. This data and information is intended as a guide and does not reflect the specification or specification range for any particular property of this product

MULE-HIDE WHITE-ON-BLACK 45-mil EPDM MEMBRANE

BENEFITS & SUPPLEMENTAL STATEMENTS

- Quality System
- Ease of Installation
- Energy efficiency – white color reflects sunlight
- Low temperature flexibility
- Fully adhered system is lightweight

CODE APPROVALS/COMPLIANCE

A variety of Factory Mutual Ratings and Underwriters Laboratories Classifications are available. Contact Mule-Hide Technical Department for additional information. Meets or exceeds ASTM D4637 for Type I non-reinforced EPDM single-ply roofing membrane.

INSTALLATION INSTRUCTIONS

1) Approved insulation shall be attached to the roof deck with an approved insulation adhesive or approved fasteners and plates. Install insulation with its largest dimension perpendicular to the direction of the membrane seams where possible.
2) Fully Adhered Roofing System
   a) The membrane is required to be mechanically attached at the base of all vertical surfaces, roof edges, and angle changes.
   b) The field of the roof is fully adhered to the substrate with Mule-Hide EPDM Bonding Adhesive.
4) Field seams are made with seam tape and tape primer.
5) All details will be done in accordance with Mule-Hide details.
6) On projects where a Mule-Hide Standard or Premium Warranty is requested, an authorized Mule-Hide representative shall inspect all completed work. This is only a brief summary and not the complete specification. The Mule-Hide Specifications, Details, Technical Bulletins, and associated documents should be thoroughly reviewed prior to starting any project. Contact Mule-Hide Products for additional information.

PRECAUTIONS

- Surfaces may be slippery when wet, or due to frost and ice build-up. Exercise caution to prevent falls.
- Mule-Hide White-on-Black EPDM membranes are highly reflective to sunlight. Workers should dress appropriately, wear sunscreen, and wear sunglasses that filter out UV light.
- Exercise care when working near roof edge. Roof edges may not be visible when surrounding area is covered with snow.
- Store Mule-Hide membrane in original wrappings in a cool, shaded area. Cover with light-colored, breathable, waterproof tarpaulins.

PROTECTION & SAFETY

Mule-Hide maintains Material Safety Data Sheets on all of its products. Material Safety Data Sheets contain health and safety information for your development of appropriate product handling procedures to protect your employees and customers. Mule-Hide's Material Safety Data Sheets should be read and understood by all of your supervisory personnel and employees before using Mule-Hide products in your facilities.

MULE-HIDE WHITE-ON-BLACK 45-mil EPDM MEMBRANE

SUPPLEMENTAL APPROVALS, STATEMENTS AND CHARACTERISTICS

1) Mule-Hide White-on-Black EPDM meets and exceeds the requirements of **ASTM D4637**[1] Type I, Standard Specification for non-reinforced EPDM Sheet Used in Single-Ply Roofing

2) **Radiative Properties** for ENERGY STAR®, Cool Roof Rating Council (CRRC) and LEED™

DESCRIPTION	TEST METHOD	SURE-WHITE EPDM
ENERGY STAR initial solar reflectance	Solar Spectrum Reflectometer	0.76
ENERGY STAR solar reflectance after 3 years	Solar Spectrum Reflectometer (uncleaned)	0.64
ENERGY STAR initial emissivity	ASTM E408	0.90
CRRC initial solar reflectance	ASTM C1549	0.76
CRRC solar reflectance after 3 years	ASTM C1549 (uncleaned)	0.64
CRRC initial thermal emittance	ASTM C1371	0.90
CRRC thermal emittance after 3 years	ASTM C1371 (uncleaned)	0.87
CRRC SRI (Solar Reflectance Index)	ASTM E1980	94
CRRC SRI (Solar Reflectance Index after 3 yrs)	ASTM E1980	77
CRRC Product ID	N/A	0670-0007
LEED thermal emittance	ASTM E408	0.91

3) Mule-Hide White-on-Black EPDM membranes are LEED compliant and are ENERGY STAR® and California Title 24 rated roof products.

An ENERGY STAR qualified low slope roof product must have an initial solar reflectance of at least 0.65 and a 3-year aged solar reflectance of at least 0.50. Cleaning the aged roof surface is not permitted by the ENERGY STAR test protocol. Energy Star is only valid in the United States for Roofing Products.

The Cool Roof Rating Council (CRRC) does not specify minimums for reflectance or emittance but they do require specific protocols for testing and reporting. Cleaning of the aged roof surface is not permitted for determination of radiative properties after 3 years.

A LEED "point" may be earned if a roof material is ENERGY STAR qualified and has a thermal emittance of at least 0.90 as determined by ASTM E408.

Solar Reflectance Index (SRI) is calculated per ASTM E 1980. The SRI is a measure of the roof's ability to reject solar heat, as shown by a small temperature rise. It is defined so that a standard black (reflectance 0.05, emittance 0.90) is 0 and a standard white (reflectance 0.80, emittance 0.90) is 100. Materials with the highest SRI values are the coolest choices for roofing. Due to the way SRI is defined, particularly hot materials can even take slightly negative values, and particularly cool materials can even exceed 100.

California Title 24 requires an initial minimum reflectance of 0.70 and emittance of 0.75 as determined by CRRC.

[1]Copyright © ASTM International, 100 Barr Harbor Drive, West Conshohocken, PA 19428-2959, USA

ADDITIONAL INFORMATION

The information given on this PDS is subject to change without notice. Always check the Mule-Hide website at www.mulehide.com for the latest information, changes and updates or contact Mule-Hide Products Company at 800-786-1492.

MULE-HIDE WHITE-ON-BLACK 45-mil EPDM MEMBRANE

DISCLAIMER

The statements provided concerning the material shown are intended as a guide for material usage and are believed to be true and accurate at the time of printing. No statement made by anyone may supersede this information, except when done in writing by Mule-Hide Products Co., Inc. Since the manner of use is beyond our control, Mule-Hide does not authorize anyone to make any warranty of merchantability or fitness for any particular purpose or any other warranty, guarantee or representation, expressed or implied, concerning this material. This product may be eligible for a Mule-Hide warranty, please check the Mule-Hide website at www.mulehide.com or contact Mule-Hide directly at 800-786-1492 for details. Buyer and user accept the product under these conditions and assume the risk of any failure, any injury person or property (including that of the user), loss or liability resulting from the handling, storage or use of the product whether or not it is handled, stored or used in accordance with the directions or specifications. Mule-Hide must be notified in writing of any claims and be given the opportunity to inspect the alleged failure before repairs are made.

Mule-Hide Products Co., Inc.
1195 Prince Hall Dr.
Beloit, WI 53511

PRODUCT DATA SHEET
PDS 09-1350
Revision Date: 08/27/09

MULE-HIDE POLYEPICHLOROHYDRIN (ECO/CO)

PRODUCT DESCRIPTION

Mule-Hide cured, non-reinforced 60-mil thick (1.52 mm) Polyepichlorohydrin roofing membrane is a factory fabricated, Polyepichlorohydrin, ECO/CO, polymer based elastomeric homogenous roof covering which may be used for new single-ply roof construction and reroofing applications where increased resistance to hydrocarbons, aromatic solvents, grease and oil is a design criterion. Membranes are available in widths of 10' (3 m) and lengths of 50' (15 m).

BASIC USES

Used as a protective overlayment on EPDM Roofing Systems having positive drainage.

TYPICAL PROPERTIES AND CHARACTERISTICS

Mule-Hide Polyepichlorohydrin 60-mil ECO/CO			
TYPICAL PROPERTIES AND CHARACTERISTICS			
Physical Property	Test Method	SPEC.(Pass)	Typical
Tolerance on Nominal Thickness, %	ASTM D 412	±10	±10
Tensile Strength, min, psi (MPa)	ASTM D 412	1305 (9.0)	1550 (10.7)
Elongation, Ultimate, min, %	ASTM D 412	200	250
Tear Resistance, min, lbf/in (kN/m)	ASTM D 624 (Die C)	150 (26.3)	225 (39.4)
Resistance to Heat Aging* Properties after 168 hours @ 240ºF (116ºC) Tensile Strength, min, psi (MPa) Elongation, Ultimate, min, %	ASTM D 412 ASTM D 412	1305 (9.0) 150	1500 (10.3) 182
Ozone Resistance* Condition after exposure to 100 pphm Ozone in air for 168 hours @ 104ºF (40ºC) Specimen is at 50% strain	ASTM D 1149	No Cracks	No Cracks
Brittleness Temp., max, deg. F (deg. C)*	ASTM D 746	-20 (-29)	-20 (-29)
Water Vapor Permeance* max, perms (.060" thickness)	ASTM E 96 (Proc. B or BW)	No ASTM Spec.	0.60
Resistance to Oil Aging* Change in mass, max, % after 7 days immersion in diesel fuel #2 at 158ºF (70ºC)	ASTM D 471	+15	+15
*Not a Quality Control Test due to the time required for the test or the complexity of the test. However, all tests are run on a statistical basis to ensure overall long-term performance of the sheeting.			

STORAGE & HANDLING

Use proper stacking procedures to ensure sufficient stability of the materials.
Exercise caution when walking on wet membrane. Membranes are slippery when wet.

PROTECTION & SAFETY

Mule-Hide maintains Material Safety Data Sheets on all of its products. Material Safety Data Sheets contain health and safety information for your development of appropriate product handling procedures to protect your employees and customers. Mule-Hide's Material Safety Data Sheets should be read and understood by all of your supervisory personnel and employees before using Mule-Hide products in your facilities.

MULE-HIDE POLYEPICHLOROHYDRIN (ECO/CO)

SYSTEM ACCESSORIES

A full line of accessories is available from Mule-Hide.

INSTALLATION INSTRUCTIONS

Install Mule-Hide products in accordance with the appropriate current printed Mule-Hide specification. Carefully review and follow the installation instructions in the Mule-Hide Specifications Manual. All details are to be installed in accordance with Mule-Hide's current published documents.

ADDITIONAL INFORMATION

The information given on this PDS is subject to change without notice. Always check the Mule-Hide website at www.mulehide.com for the latest information, changes and updates or contact Mule-Hide Products Company at 800-786-1492.

DISCLAIMER

The statements provided concerning the material shown are intended as a guide for material usage and are believed to be true and accurate at the time of printing. No statement made by anyone may supersede this information, except when done in writing by Mule-Hide Products Co., Inc. Since the manner of use is beyond our control, Mule-Hide does not authorize anyone to make any warranty of merchantability or fitness for any particular purpose or any other warranty, guarantee or representation, expressed or implied, concerning this material. This product may be eligible for a Mule-Hide warranty, please check the Mule-Hide website at www.mulehide.com or contact Mule-Hide directly at 800-786-1492 for details. Buyer and user accept the product under these conditions and assume the risk of any failure, any injury person or property (including that of the user), loss or liability resulting from the handling, storage or use of the product whether or not it is handled, stored or used in accordance with the directions or specifications. Mule-Hide must be notified in writing of any claims and be given the opportunity to inspect the alleged failure before repairs are made.

Mule-Hide Products Co., Inc.
1195 Prince Hall Dr.
Beloit, WI 53511

UNIVERSAL SINGLE-PLY SEALANT

PRODUCT DESCRIPTION

A 100% solids, solvent free, one-part, polyether sealant that provides a weather tight seal to a variety of building substrates. Provides excellent adhesive to substrates such as stone, masonry, ceramic, marble, wood, steel, aluminum, most plastics and composites. Not recommended as a glass-glazing sealant.

BASIC USES

Universal Single-Ply Sealant can be used as a:

- Lap-sealant for White-on-Black EPDM roofing systems
- Sealant for All-Purpose Bar on EPDM, TPO, and PVC systems
- Sealant for counter flashings, copings, and scupper details

TYPICAL PHYSICAL PROPERTIES

Typical Properties and Characteristics	
Viscosity	850,000 Cps
Tack Free Time	35 minutes depending upon temperature
Cure Time	3-7 days depending upon temperature
Flow, Sag or Sump	None (1/4" bead)
Staining	None
Ozone Resistance	Good
UV Resistance	Excellent
Cured Hardness (Shore A)	17 - 23
Shear Strength	150 PSI
Color	White
Typical properties and characteristics are based on samples tested and are not guaranteed for all samples of this product. This data and information is intended as a guide and does not reflect the specification or specification range for any particular property of this product.	

PACKAGING

Packaging	
Weight per Carton	26 lbs
Packaging	24 tubes, 10.1 fluid oz. each (per carton)
Shelf Life	12 months (unopened tube @ 90° F

BENEFITS & SUPPLEMENTAL STATEMENTS

Excellent adhesion to various substrates
VOC free
Versatile applications

COVERAGE RATES

25 feet (7.6 m) per tube or 600 feet (183 m) using a 0.250 " (6 mm) bead

INSTALLATION TEMPERATURE

Do not install in temperatures below 40° F

UNIVERSAL SINGLE-PLY SEALANT

INSTALLATION INSTRUCTIONS

1. Universal Single-Ply Sealant is a one-component, ready-to-use material that requires no mixing or preparation.
2. Surface Preparation - Surfaces shall be dry, clean and free of all dust, or contamination, which may harmfully affect the adhesion of the sealant. Cleaning with Weathered Membrane Cleaner may be required.
3. A quality caulking gun should be used to ensure ease of application.
4. Universal Single-Ply Sealant typically is tack free in 25 minutes and skins over within 45 minutes. Full cure occurs in 3 to 7 days depending on temperature and humidity.
5. Clean Up - Remove excess sealant adjacent to joint prior to curing with our Weathered Membrane Cleaner. Uncured sealant can also be removed from tools or equipment with our Weathered Membrane Cleaner.

PRECAUTIONS

1. Avoid prolonged contact with skin. Uncured adhesive irritates eyes. In case of contact with eyes, immediately flush with water. Consult a physician if ill effects occur.
2. Store in original unopened containers in a cool, dry area. Protect unopened containers from heat and direct sunlight. Elevated temperatures will reduce shelf life.
3. KEEP OUT OF THE REACH OF CHILDREN.
4. For industrial professional use only. May not be repackaged or resold for other than industrial or professional use.
5. See Material Safety Data Sheet for complete safety information before using product.
6. Do not use Universal Single-Ply Sealant in temperatures below 40 degrees F.

PROTECTION & SAFETY

Mule-Hide maintains Material Safety Data Sheets on all of its products. Material Safety Data Sheets contain health and safety information for your development of appropriate product handling procedures to protect your employees and customers. Mule-Hide's Material Safety Data Sheets should be read and understood by all of your supervisory personnel and employees before using Mule-Hide products in your facilities.

ADDITIONAL INFORMATION

The information given on this PDS is subject to change without notice. Always check the Mule-Hide website at www.mulehide.com for the latest information, changes and updates or contact Mule-Hide Products Company at 800-786-1492.

DISCLAIMER

The statements provided concerning the material shown are intended as a guide for material usage and are believed to be true and accurate at the time of printing. No statement made by anyone may supersede this information, except when done in writing by Mule-Hide Products Co., Inc. Since the manner of use is beyond our control, Mule-Hide does not authorize anyone to make any warranty of merchantability or fitness for any particular purpose or any other warranty, guarantee or representation, expressed or implied, concerning this material. This product may be eligible for a Mule-Hide warranty, please check the Mule-Hide website at www.mulehide.com or contact Mule-Hide directly at 800-786-1492 for details. Buyer and user accept the product under these conditions and assume the risk of any failure, any injury person or property (including that of the user), loss or liability resulting from the handling, storage or use of the product whether or not it is handled, stored or used in accordance with the directions or specifications. Mule-Hide must be notified in writing of any claims and be given the opportunity to inspect the alleged failure before repairs are made.

Mule-Hide Products Co., Inc.
1195 Prince Hall Dr.
Beloit, WI 53511

PRODUCT DATA SHEET
PDS 09-2110
Revision Date: Jan-2014

MULE-HIDE WATER CUT-OFF

PRODUCT DESCRIPTION

Mule-Hide Water Cut-Off is a one-part, low viscosity, self-wetting, butyl-blend mastic designed for sealing Mule-Hide membranes to wood, concrete, metal, plastic and other substrates. This product is an extremely tacky material and will remain so when used with a compression –type seal.

BASIC USES

Mule-Hide Water Cut-Off can be used to seal roofing membranes to stop water penetration into the roofing system. Common uses are at drain terminations and behind Mule-Hide's All Purpose Bars at wall terminations

TYPICAL PHYSICAL PROPERTIES

Typical Properties and Characteristics	
Color	Gray
Solids	80%
Flash Point	40ºF (4ºC) Closed Cup
Service Temperature	-40ºF to 200ºF (-40ºC to 93ºC)
Specific Gravity	1.29
Cold Weather Flexibility	Good
Average Brookfield Viscosity	1,320,000 cps
Typical properties and characteristics are based on samples tested and are not guaranteed for all samples of this product. This data and information is intended as a guide and does not reflect the specification or specification range for any particular property of this product.	

LEED Information	
Pre-consumer Recycled Content	0%
Post-consumer Recycled Content	0%
Manufacturing Location	Carlisle, PA
VOC Content	250 g/L

Packaging
Weight Per Carton – 28 lbs
Packaging – 25 tubes / carton
Shelf Life (un-opened tube) – 1 year

BENEFITS & SUPPLEMENTAL STATEMENTS

Excellent adhesion to various substrates
Provides a durable compression type seal
Versatile applications

COVERAGE RATES

Approximately 10 lineal feet per using a ½" diameter bead

INSTALLATION INSTRUCTIONS

1. Mule-Hide Water Cut-Off is a one-component, ready-to-use material that requires no mixing or preparation.
2. Surface Preparation - Surfaces shall be dry, clean and free of all dust, or contamination, which may harmfully affect the adhesion of the sealant. Cleaning with Weathered Membrane Cleaner may be required.
3. A quality caulking gun should be used to ensure ease of application.
4. Apply a ½" diameter bead of Mule-Hide Water Cut-Off between the substrate and the edge of the membrane. The membrane must cover the mastic.
4. Install appropriate termination detail and secure to provide constant compression for the Mule-Hide Water Cut-Off. Follow Mule-Hide's Specification Manual and Details for appropriate methods of termination.

MULE-HIDE WATER CUT-OFF

CLEAN UP

1. Clean Up - Remove excess Water Cut-Off with our Weathered Membrane Cleaner. Water Cut-Off can also be removed from tools or equipment with our Weathered Membrane Cleaner.

PRECAUTIONS

1. See Material Safety Data Sheet for complete safety information before using product.
2. Water Cut-Off is FLAMMABLE – contains solvents that area dangerous fire and explosion hazards when exposed to heat, flame or sparks. Store and use away from all sources of heat, flame or sparks. Do not smoke while applying. Do not use in a confined or unventilated area. Vapors are heavier than air and may travel along ground to a distant ignition source and flash back
3. Avoid breathing vapors. Keep container closed when not in use. Use with adequate ventilation. If inhaled, remove to fresh air. If not breathing, perform artificial respiration. If breathing is difficult, give oxygen. Call a physician immediately.
4. If swallowed, DO NOT INDUCE VOMITING. Call a physician immediately.
5. Avoid contact with eyes. Safety glasses or goggles are recommended. If splashed in eyes, immediately flush eyes with plenty of clean water for at least 15 minutes. Contact a physician immediately.
6. Avoid contact with skin. Wash hands thoroughly after handling. In case of contact with skin, thoroughly wash affected area with soap and water.

   Note: Permeation-resistant gloves (that meet ANSI/ISEA 105-2005) are recommended to be worn when using this product to protect hands from irritating ingredients.

PROTECTION & SAFETY

Mule-Hide maintains Material Safety Data Sheets on all of its products. Material Safety Data Sheets contain health and safety information for your development of appropriate product handling procedures to protect your employees and customers. Mule-Hide's Material Safety Data Sheets should be read and understood by all of your supervisory personnel and employees before using Mule-Hide products in your facilities.

ADDITIONAL INFORMATION

The information given on this PDS is subject to change without notice. Always check the Mule-Hide website at www.mulehide.com for the latest information, changes and updates or contact Mule-Hide Products Company at 800-786-1492.

DISCLAIMER

The statements provided concerning the material shown are intended as a guide for material usage and are believed to be true and accurate at the time of printing. No statement made by anyone may supersede this information, except when done in writing by Mule-Hide Products Co., Inc. Since the manner of use is beyond our control, Mule-Hide does not authorize anyone to make any warranty of merchantability or fitness for any particular purpose or any other warranty, guarantee or representation, expressed or implied, concerning this material. This product may be eligible for a Mule-Hide warranty, please check the Mule-Hide website at www.mulehide.com or contact Mule-Hide directly at 800-786-1492 for details. Buyer and user accept the product under these conditions and assume the risk of any failure, any injury person or property (including that of the user), loss or liability resulting from the handling, storage or use of the product whether or not it is handled, stored or used in accordance with the directions or specifications. Mule-Hide must be notified in writing of any claims and be given the opportunity to inspect the alleged failure before repairs are made.

Mule-Hide Products Co., Inc.
1195 Prince Hall Dr.
Beloit, WI 53511

PRODUCT DATA SHEET
PDS 09-2210
Revision Date: Jan-2014

MULE-HIDE POURABLE SEALER

PRODUCT DESCRIPTION

Mule-Hide Pourable Sealer is a two component, solvent free, polyurethane based product compatible with Mule-Hide's various EPDM systems. Mule-Hide Pourable Sealer was designed to provide a flexible, yet long lasting seal around hard to flash penetrations through the roof deck.

BASIC USES

Mule-Hide's Pourable Sealer is used primarily as a filler for sealing pitch pans. This product may also be used to provide a permanent tie-in between EPDM membranes and a built-up roof system and for attaching lightning rod bases and ground cable clips to the roofing membrane.

TYPICAL PHYSICAL PROPERTIES

Physical Property	Results
Color	Black
Solids Content	100%
Flash Point	Part A 490ºF (254ºC) Part B 220ºF (104ºC)
Average Tensile Strength	210 psi
Average Specific Gravity	1.23
Average Hardness (Shore A)	30
Average Elongation	280%
Low Temperature Brittleness	-50ºF (-46ºC)
VOC	Part A – Less than 15 grams / liter Part B – Less than 10 grams / liter
Packaging (per carton)	Part A – 2, 1-gallon cans Part B – 2, 1-pint cans
Pot Life	30 minutes @ 75ºF
Shelf Life	1year in un-opened container
Typical properties and characteristics are based on samples tested and are not guaranteed for all samples of this product. This data and information is intended as a guide and does not reflect the specification or specification range for any particular property of this product.	

BENEFITS & SUPPLEMENTAL STATEMENTS

- Quick curing time after mixing
- Provides a flexible, long-lasting seal around hard to flash projections

COVERAGE RATES

One gallon of Pourable Sealer contains 231 cubic inches for filling Pitch pans. Due to waste and crowning, 200 cubic inches should be used as a guideline to determine gallons required. One gallon of Pourable Sealer will cover approximately 19 linear feet of cold tie-in 6 inches wide on a smooth surface. Coverage will vary according to surface roughness and thickness of application.

Coverage rates are average and may vary due to jobsite conditions.

MULE-HIDE POURABLE SEALER

MIXING INSTRUCTIONS

Thoroughly mix the Part B (1 pint can) and pour contents into Part A (1 gallon can). Thoroughly stir components together using a variable speed drill and mixing blade for a minimum of 5 minutes. Be sure to scrape the sides of the can to ensure uniform mixing. Note: Part B (1 pint can) may be pressurized - open container slowly.

Note: When mixed, Pourable Sealer has a pot life of approximately 30 minutes.

Note: Part B (1-pint can) may be pressurized – open container slowly.

INSTALLATION INSTRUCTIONS

1. Pitch Pans
    a. Fit the EPDM membrane as tightly as possible around the penetrating object and seal as necessary to prevent loss of filler.
    b. Install and flash pitch pans in accordance with the appropriate details. Minimum Pourable Sealer depth required is 2 inches. Minimum distance from object to the side of the pans is 1 inch.
    c. Clean all mating surfaces with Weathered Membrane Cleaner and allow to dry. Prime all surfaces Tape Primer, including field membrane, penetration and un-cured flashing that will come in contact with the Pourable Sealer and allow primer to properly flash off. If using Pourable Sealer Pocket do not apply Tape Primer to blue strip that forms inside wall of the Pourable Sealer Pocket.
    d. Fill pan with properly mixed Pourable Sealer in sufficient quantity to crown the top surface to prevent ponding water.

A. B. Tie-in to Built-Up Roof Surfaces
    a. Scrape and clean the built-up surface to remove all gravel, dirt and moisture in the tie-in area to ensure the surface is smooth, clean and dry.
    b. Properly mix the Pourable Sealer as specified and embed the Uncured EPDM Flashing as indicated in the detail section of the Mule-Hide Manual.

PRECAUTIONS

1. See Material Safety Data Sheet for complete safety information before using product.
2. Avoid breathing vapors. Keep container closed when not in use. Use with adequate ventilation. If inhaled, remove to fresh air. If not breathing, perform artificial respiration. If breathing is difficult, give oxygen. Call a physician immediately.
3. If swallowed, DO NOT INDUCE VOMITING. Call a physician immediately.
4. Avoid contact with eyes. Safety glasses or goggles are recommended. If splashed in eyes, immediately flush eyes with plenty of clean water for at least 15 minutes. Contact a physician immediately.
5. Do not thin Pourable Sealer as thinning will affect performance.
6. Avoid contact with skin. Wash hands thoroughly after handling. In case of contact with skin, thoroughly wash affected area with soap and water.

   Note: Permeation-resistant gloves (that meet ANSI/ISEA 105-2005) are recommended to be worn when using this product to protect hands from irritating ingredients.
7. Shelf life is based on storage in original, unopened and undamaged containers at temperatures ranging from 60ºF to 80ºF (15ºC to 26ºC). Should Pourable Sealer be exposed to lower temperatures, restore to room temperature prior to use.
8. Avoid contact of Pourable Sealer to surfaces other than rubber membranes as staining will occur.
9. KEEP OUT OF REACH OF CHILDREN.

MULE-HIDE POURABLE SEALER

PROTECTION & SAFETY

Mule-Hide maintains Material Safety Data Sheets on all of its products. Material Safety Data Sheets contain health and safety information for your development of appropriate product handling procedures to protect your employees and customers. Mule-Hide's Material Safety Data Sheets should be read and understood by all of your supervisory personnel and employees before using Mule-Hide products in your facilities.

ADDITIONAL INFORMATION

The information given on this PDS is subject to change without notice. Always check the Mule-Hide website at www.mulehide.com for the latest information, changes and updates or contact Mule-Hide Products Company at 800-786-1492.

DISCLAIMER

The statements provided concerning the material shown are intended as a guide for material usage and are believed to be true and accurate at the time of printing. No statement made by anyone may supersede this information, except when done in writing by Mule-Hide Products Co., Inc. Since the manner of use is beyond our control, Mule-Hide does not authorize anyone to make any warranty of merchantability or fitness for any particular purpose or any other warranty, guarantee or representation, expressed or implied, concerning this material. This product may be eligible for a Mule-Hide warranty, please check the Mule-Hide website at www.mulehide.com or contact Mule-Hide directly at 800-786-1492 for details. Buyer and user accept the product under these conditions and assume the risk of any failure, any injury person or property (including that of the user), loss or liability resulting from the handling, storage or use of the product whether or not it is handled, stored or used in accordance with the directions or specifications. Mule-Hide must be notified in writing of any claims and be given the opportunity to inspect the alleged failure before repairs are made.

Mule-Hide Products Co., Inc.
1195 Prince Hall Dr.
Beloit, WI 53511

PRODUCT DATA SHEET
PDS 09-2220
Revision Date: Jan 2014

BLACK ONE-PART POURABLE SEALER

PRODUCT DESCRIPTION

Black One-Part Pourable Sealer is a one-part, moisture curing, elastomeric polyether sealant providing rapid skin time when exposed to atmospheric moisture forming a waterproof rubber surface in less than an hour. Moisture curing continues for fourteen to twenty-eight days, until a two-inch deep solid rubber seal encases the penetration. Complete cure time will vary depending on relative humidity and temperature. Mule-Hide's Tape Primer must be applied to all surfaces that will be in contact with the Black One-Part Pourable Sealer. Unused sealant remaining in the pouch will remain useable up to 30 days if pouch is resealed with original cap.

BASIC USES

This product is designed for use with our EPDM Sealant Pockets. The sealant's one-part, pourable consistency allows for quick pocket filling without mixing

SPECIFICATIONS

Typical Values*	
Color	Black
Odor	Mild ester smell (mint) when wet. Odorless when dry.
Specific Gravity	1.4 (11.6 lbs/gallon) – 1.5 (12.5 lbs/gallon)
Viscosity (Brookfield RTV), cps	Self leveling 20,000 – 50,000
Hardness (Shore A) ASTM C 0661	25 - 35
Tack Free Time ASTM C 0679	Less than 1 hour @ 70 degrees F. (21 degrees C)
Low temperature flex – PASS	Minus 20 degrees F
Service Temperature ASTM 2453	Minus 40 degrees F to 200 degrees F. (Minus 40 degrees C to 93 degrees C)
Shrinkage (14 day cure)	No measurable shrinkage
Elongation @ Break, % ASTM D 412	450
Long Term Weatherability ASTM G 53 - 98 cycles @ 12 hours/cycle - Condensate exposure: 4 hrs @ 122°F (50°C) - U.V. exposure – 8 hrs@ 158°F (70°C)	No Cracking or crazing
*Typical properties and characteristics are based on samples tested and are not guaranteed for all samples of this product. This data and information is intended as a guide and does not reflect the specification or specification range for any particular property of this product.	

PACKAGING

Each carton contains: 4 – 0.5 Gallon pouches per bucket (4-2 liter)
Weight Per Carton: 29 lbs/bucket (13.15 kg)

BENEFITS & SUPPLEMENTAL STATEMENTS

- No mixing required – ready to use
- Resealable pouch using original cap
- Provides a flexible and long-lasting seal around hard to flash projections
- Provides a watertight seal in less than one hour after application

BLACK ONE-PART POURABLE SEALER

COVERAGE RATES

One 0.5-gallon pouch (2-liter) will fill 122 cubic inches of volume within a sealant pocket. As an example, one 6" EPDM Sealant Pocket will require 0.23 gallons (0.87 liters) to fill completely (with no penetrations). Coverage rates are average and may vary due to job site conditions.

INSTALLATION INSTRUCTIONS*

Preparation

1. Surfaces must be free of moisture, dirt and any contaminants. Any previously applied asphalt, caulking or sealants must be removed from the penetration.
2. Fill any voids in the roof deck around the penetration(s) to prevent sealant from seeping through the roof. Pourable sealer must be a minimum of 2" (50 mm) deep. All penetrations must be a minimum of 1" (25 mm) from the sides of the pitch pan or sealer pocket.
3. Clean all surfaces with Weathered Membrane Cleaner.
4. Mule-Hide Tape Primer is required for prepping the interior surfaces of the pocket. After welding the pocket in place, apply Mule-Hide Tape Primer to all bonding surfaces, including penetration(s), TPO-c membrane, inside wall and rim of TPO Molded Sealant Pocket. DO NOT apply primer to blue plastic strip that forms inside wall of pourable sealer pocket. Allow primer to dry.
5. Remove cap from 0.5-gallon (2-liter) pouch and pour Thermoplastic One-Part Pourable Sealer directly into pocket. Fill pocket completely until rim is covered with Thermoplastic One-Part Pourable Sealer making sure all voids are filled.
6. To save unused sealant, squeeze air from pouch and replace cap. Unused sealant should be used within 30 days.
7. For results maintain this product at room temperature before use.
8. For cold weather applications remove any frost or moisture from inside pocket using a hand held heat gun.

*Review current Mule-Hide Specifications and Details for specific application requirements.

Precautions

1. Review the applicable Material Safety Data Sheet for complete safety information prior to use.
2. Avoid breathing vapors. Keep container closed when not in use. Use with adequate ventilation. If inhaled, remove to fresh air. If not breathing, perform artificial respiration. If breathing is difficult, give oxygen. Call a physician immediately.
3. If swallowed, DO NOT INDUCE VOMITING! Call a physician immediately.
4. Avoid contact with eyes. Safety glasses or goggles are recommended. If splashed in eyes, immediately flush eyes with water for at least 15 minutes. Contact a physician immediately.
5. Avoid contact with skin. Wash hand thoroughly after handling. In case of contact with skin, thoroughly wash affected area with soap and water.
6. Do not thin. Thinning will affect performance.
7. Avoid contact with non-rubber surfaces as staining will result.
8. KEEP OUT OF REACH OF CHILDREN.

STORAGE & HANDLING

Shelf life is established at 18 months. Shelf life is based on storage in original, unopened or undamaged containers at temperatures ranging from 60°F to 80°F. Should the Pourable Sealer be exposed to lower temperatures, restore to room temperature prior to use.

BLACK ONE-PART POURABLE SEALER

PROTECTION & SAFETY

Mule-Hide maintains Material Safety Data Sheets on all of its products. Material Safety Data Sheets contain health and safety information for your development of appropriate product handling procedures to protect your employees and customers. Mule-Hide's Material Safety Data Sheets should be read and understood by all of your supervisory personnel and employees before using Mule-Hide products in your facilities.

ADDITIONAL INFORMATION

The information given on this PDS is subject to change without notice. Always check the Mule-Hide website at www.mulehide.com for the latest information, changes and updates or contact Mule-Hide Products Company at 800-786-1492.

DISCLAIMER

The statements provided concerning the material shown are intended as a guide for material usage and are believed to be true and accurate at the time of printing. No statement made by anyone may supersede this information, except when done in writing by Mule-Hide Products Co., Inc. Since the manner of use is beyond our control, Mule-Hide does not authorize anyone to make any warranty of merchantability or fitness for any particular purpose or any other warranty, guarantee or representation, expressed or implied, concerning this material. This product may be eligible for a Mule-Hide warranty, please check the Mule-Hide website at www.mulehide.com or contact Mule-Hide directly at 800-786-1492 for details. Buyer and user accept the product under these conditions and assume the risk of any failure, any injury person or property (including that of the user), loss or liability resulting from the handling, storage or use of the product whether or not it is handled, stored or used in accordance with the directions or specifications. Mule-Hide must be notified in writing of any claims and be given the opportunity to inspect the alleged failure before repairs are made.

MULE-HIDE ALL PURPOSE SINGLE SEAL ADHESIVE

PRODUCT DESCRIPTION

Mule-Hide All Purpose Single Seal Adhesive is a black synthetic rubber based product designed specifically as a premium grade brush and roller applied contact adhesive for bonding EPDM membrane materials in single ply roofing systems. The resin reinforced rubber in this adhesive produces strong bonds that are resistant to moisture, oil, and grease. Maximum physical and chemical properties are achieved after 2-3 days from time of application.

NOT FOR USE ON WARRANTED SYSTEMS

BASIC USES

Mule-Hide All Purpose Single Seal Adhesive may be used as either a splice or bonding adhesive. This product eliminates the need for two products at the job site. All Purpose Single Seal Adhesive bonds EPDM to metal, wood, concrete, and approved insulation boards.

SPECIFICATIONS

Base:	Polychlorophrene
Viscosity:	2800-3200 cps
Specific Gravity:	0.86
Color:	Black
Odor:	Mild
Bonding Range:	Approximately 2 hours
Coverage:	Approximately 60 sf/gal (2 side application)

Typical Values: Based on material tested in our laboratories but variable from sample to sample. Typical values should not be construed as a guaranteed analysis of any specific lot or as specification items.

PACKAGING AND STORAGE

DOT Label Required: Flammable Liquid

Materials should be stored in a cool dry area away from heat, sparks and open flame.

INSTALLATION INSTRUCTIONS

Bonding Adhesive - Materials to be bonded should be clean, dry and free of contaminates. Stir the adhesive thoroughly before use. Using a standard solvent resistant roller, apply the adhesive to the underside of the membrane, and to the roof deck, at a rate of 60 square feet per gallon on two sided application. Allow to dry approximately 15 to 30 minutes before assembly. Roll membrane onto the coated underlayment. After mating, broom the membrane using adequate pressure to ensure positive contact between the membrane and the underlayment.

Splice Adhesive - Position the membrane to overlap the distance recommended for the application. Clean seams of roofing membrane by using the Mule-Hide Seam Cleaner. Scrub Mule-Hide Seam Cleaner on splice area and allow to dry. Apply a uniform coat of adhesive to both primed surfaces with a clean brush or roller using consistent strokes parallel to the direction of the splice. Allow surfaces to dry approximately 15 to 30 minutes (environmental conditions may affect drying time).

MULE-HIDE PRODUCTS CO., INC.
P.O. Box 1057, Beloit, WI 53512-1057 • 608/365-3111 • Fax: 608/365-7852 • www.mulehide.com

MULE-HIDE ALL PURPOSE SINGLE SEAL ADHESIVE

INSTALLATION INSTRUCTIONS (cont'd)

Assemble seams together. Immediately roll the splice with a 2" wide steel roller with adequate pressure to ensure that intimate contact is made. After splice has been assembled, apply a bead of lap sealant along the exposed edge of the splice.

Note: Mule-Hide Tape Primer or Seam Cleaner must be used when the Mule-Hide All Purpose Single Seal is used as a splice adhesive!

Estimated Coverage Rates*

Splice Width	Coverage (Linear Feet/Gallon)
4"	130-150 lf.
6"	90-110 lf.

*(5 mils thick, dry, both sides)

PRECAUTIONS

Mule-Hide All Purpose Single Seal Adhesive contains ingredients which could be harmful if mishandled. Contact with skin and eyes should be avoided and necessary protective equipment and clothing should be worn.

Mule-Hide Products Co., Inc . maintains Material Safety Data Sheets on all of its products. Material Safety Data Sheets contain health and safety information for your development of appropriate products handling procedures to protect your employees and customers. Our Material Safety Data Sheets should be read and understood by all of your supervisory personnel and employees before using Mule-Hide products in your facility.

TECHNICAL SERVICES

Contact Mule-Hide Products Co., Inc. at 608/365-3111 for additional information.

DISCLAIMER

The statements provided concerning the material shown are intended as a guide for material usage and are believed to be true and accurate. No statement made by anyone may supersede this information, except when done in writing by Mule-Hide Products Co., Inc. Since the manner of use is beyond our control, Mule-Hide does not make nor does it authorize anyone to make any warranty of merchantability or fitness for any particular purpose or any other warranty, guarantee or representation, expressed or implied, concerning this material except that it conforms to Mule-Hide's physical properties. Buyer and user accept the product under these conditions and assume the risk of any failure, any injury of person or property (including that of the user), loss or liability resulting from the handling, storage or use of the product whether or not it is handled, stored or used in accordance with the directions or specifications. Mule-Hide must be notified in writing of any claims and be given the opportunity to inspect the complaint or failure before repairs are made.

MULE-HIDE PRODUCTS CO., INC.

P.O. Box 1057, Beloit, WI 53512-1057 • 608/365-3111 • Fax: 608/365-7852 • www.mulehide.com

MULE-HIDE PRODUCTS CO., INC.
P.O. Box 1057, Beloit, WI 53512-1057 • 608/365-3111 • Fax: 608/365-7852 • www.mulehide.com

Mule-Hide Products Co., Inc.
1195 Prince Hall Dr.
Beloit, WI 53511

PRODUCT DATA SHEET
PDS 09-2320
Revision Date: March 2013

MULE-HIDE BONDING ADHESIVE

PRODUCT DESCRIPTION

Mule-Hide Bonding Adhesive is a high strength solvent-based contact adhesive that allows quick bonding of EPDM membrane and cured flashings to various porous and non-porous substrates. May be used on both horizontal and vertical surfaces. Formulated for application with a ½" (13 mm) medium nap roller.

BASIC USES

Mule-Hide Bonding Adhesive is used for bonding cured flashings and membranes to a variety of substrates.

TYPICAL PHYSICAL PROPERTIES

Typical values*	
Base Material	Synthetic Rubber
Color	Yellow
Solids	18 - 22%
VOC:	660 g/l max
Flash Point	-4° F (-20° C) Closed Cup
Brookfield Viscosity	3,200 Centipoises
Avg Net Weight	7.1 lbs. / gallon (0.85 Kg/L)
Packaging	5 Gallon Pails
Shelf Life	1 Year

*General properties. Typical properties and characteristics are based on samples tested and are not guaranteed for all samples of this product. This data and information is intended as a guide and does not reflect the specification or specification range for any particular property of this product.

PACKAGING

5 Gallon Pails

BENEFITS & SUPPLEMENTAL STATEMENTS

- High strength adhesive with quick bonding characteristics
- Ease of application with a medium nap roller
- Provides excellent adhesion between EPDM membranes and a variety of substrates

CODE APPROVALS/COMPLIANCE

A variety of Factory Mutual Ratings and Underwriter Laboratory Classifications are available. Contact Mule-Hide Technical Department for additional information.

COVERAGE RATES

Coverage for Mule-Hide Bonding Adhesive is approximately 60 ft² (5.6 square m) per gallon (finished surface.) This coverage rate is an average and may vary due to conditions on the job site. Porous surfaces and substrates may require more bonding adhesive than the typical coverage rate.

INSTALLATION TEMPERATURE

If adhesive is store at temperatures less than 60° F, restore to room temperature (~70° F) before using.

MULE-HIDE BONDING ADHESIVE

INSTALLATION INSTRUCTIONS

Surface Preparation

1. The surface, on or against which adhesive is to be applied, shall be clean, smooth, dry, free of fins, sharp edges, loose and foreign materials, oil and grease. Depressions greater than 1/4" (6 mm) should be feathered; using epoxy, mortar or other approved patching material. All sharp projections shall be removed by sweeping, blowing or vacuum cleaning.

Application

1. Stir thoroughly until all settle pigments are dispersed and product is uniform in color. After stirring (minimum 5 minutes) apply Mule-Hide Bonding Adhesive to substrate and membrane using a 9" (230 mm) wide, ½" (13 mm) medium nap roller. Application shall be continuous and uniform avoiding globs or puddles. Mule-Hide Bonding Adhesive must be allowed to dry until it does not string or stick to a dry finger touch. Any coated area, which has been exposed to rain, should be allowed to dry and then recoated. **Do not apply adhesive to seam areas or use with taped products.**

2. Roll the membrane onto the adhesive coated substrate while avoiding wrinkles. Immediately brush down the bonded portion of the sheet with a soft bristle push broom or a clean dry roller applicator to achieve maximum contact. In some applications, swelling of the membrane may occur initially, but this will disappear after several days' exposure. Do not re-broom membrane in an attempt to remove swelling.

   REVIEW CURRENT MULE-HIDE SPECIFICATIONS AND DETAILS FOR SPECIFIC APPLICATION REQUIREMENTS.

Precautions

1. Review the applicable Material Safety Data Sheet for complete safety information prior to use.

2. Mule-Hide Bonding Adhesive is **EXTREMELY FLAMMABLE** -It contains solvents that are dangerous fire and explosion hazards when exposed to heat, flame or sparks. Do not smoke while applying. Do not use in a confined or unventilated area. Vapors are heavier than air and may travel along ground or may be moved by ventilation and ignited by pilot lights, other flames, sparks, heaters, smoking, electrical motors, static discharge, or other ignition sources at locations distant from material handling point and flashback. All containers should be grounded when material is transferred from one container to another. A red caution label is required when shipping. A fire extinguisher should be available. In case of fire, use water spray, foam, dry chemical or carbon dioxide. Do not use a solid stream of water because it can scatter and spread the fire.

3. Avoid breathing vapors. Keep container closed when not in use. Use with adequate ventilation. If inhaled, remove to fresh air. If not breathing, perform artificial respiration. If breathing is difficult, give oxygen. Call a physician immediately. During application, efforts must be made to prevent fumes from entering the building via air ventilation ducts. Do not place open containers or mix adhesive near fresh air intake units. When possible, shut down or seal off the closest units.

4. If swallowed, **DO NOT INDUCE VOMITING.** Call a physician immediately.

5. Avoid contact with skin. Wash hands thoroughly after handling. In case of contact with skin, thoroughly wash affected area with soap and water. Contact physician if irritation persists. **Note:** Permeation resistant gloves (that meet ANSI/ISEA 105-2005) are recommended to be worn when using this product to protect hands from irritating ingredients.

MULE-HIDE BONDING ADHESIVE

Precautions (continued)

6. Avoid contact with eyes. Safety glasses or goggles are recommended. If splashed in eyes, immediately flush eyes with plenty of clean water for at least 15 minutes. Contact a physician immediately.

7. Do not thin Mule-Hide Bonding Adhesive. Thinning will affect performance. Excessively thick or gelled material should be discarded.

8. Job site storage in excess of 90°F (32°C) may affect product shelf life. Should the Mule-Hide Bonding Adhesive be stored at temperatures lower than 60°F (15°C), restore to room temperature prior to use.

9. These materials are sensitive to ambient moisture and heat will accelerate the effect of moisture. Opened containers of Bonding Adhesive should be used within 48 hours. Adhesive will begin to thicken after this point, making it difficult and eventually impossible, to control adhesive thickness. In hot weather, do leave sealed containers on roof for prolonged periods of time. In cold weather, keep material at room temperature until ready to use. Stir adhesive occasionally while using.

10. Coverage rates are an average and may vary due to jobsite conditions.

11. **KEEP OUT OF THE REACH OF CHILDREN**

STORAGE & HANDLING

Job site storage in excess of 90°F (32°C) may affect product shelf life. Should the Mule-Hide Bonding Adhesive be stored at temperatures lower than 60°F (15°C), restore to room temperature prior to use.

PROTECTION & SAFETY

Mule-Hide maintains Material Safety Data Sheets on all of its products. Material Safety Data Sheets contain health and safety information for your development of appropriate product handling procedures to protect your employees and customers. Mule-Hide's Material Safety Data Sheets should be read and understood by all of your supervisory personnel and employees before using Mule-Hide products in your facilities.

ADDITIONAL INFORMATION

The information given on this PDS is subject to change without notice. Always check the Mule-Hide website at www.mulehide.com for the latest information, changes and updates or contact Mule-Hide Products Company at 800-786-1492.

DISCLAIMER

The statements provided concerning the material shown are intended as a guide for material usage and are believed to be true and accurate at the time of printing. No statement made by anyone may supersede this information, except when done in writing by Mule-Hide Products Co., Inc. Since the manner of use is beyond our control, Mule-Hide does not authorize anyone to make any warranty of merchantability or fitness for any particular purpose or any other warranty, guarantee or representation, expressed or implied, concerning this material. This product may be eligible for a Mule-Hide warranty, please check the Mule-Hide website at www.mulehide.com or contact Mule-Hide directly at 800-786-1492 for details. Buyer and user accept the product under these conditions and assume the risk of any failure, any injury person or property (including that of the user), loss or liability resulting from the handling, storage or use of the product whether or not it is handled, stored or used in accordance with the directions or specifications. Mule-Hide must be notified in writing of any claims and be given the opportunity to inspect the alleged failure before repairs are made.

Mule-Hide Products Co., Inc.
1195 Prince Hall Dr.
Beloit, WI 53511

PRODUCT DATA SHEET
PDS 09-2405
Revision Date: Jan-2014

MULE-HIDE Low VOC BONDING ADHESIVE

PRODUCT DESCRIPTION

Low VOC Bonding Adhesive is a high strength solvent-based contact adhesive that allows bonding of EPDM and TPO membrane to various porous and non-porous substrates. It is specially formulated using a blend of VOC exempt and non-exempt solvents to be meet the < 250 gpl VOC content requirements of the OTC Model Rule for Single Ply Roofing Adhesives. Low VOC Bonding Adhesive is easily applied with a 9" (228 mm) medium nap roller to create a strong bond between the membrane and approved substrate.

This product does not comply with the following California counties' VOC regulations: Alameda, Contra Costa, El Dorado, Los Angeles, Marin, Napa, Orange, Riverside, Sacramento, San Bernardino, San Diego, San Francisco, San Mateo, Santa Clara, Solano, Sonoma, and Tehama. These areas require the use of Mule-Hide Low-VOC 1168 Bonding Adhesive.

BASIC USES

Mule-Hide Bonding Adhesive is used for bonding cured flashings and membranes to a variety of substrates.

TYPICAL PHYSICAL PROPERTIES

Typical values*	
Base Material	Synthetic Rubber
Color	Yellow
Solids	22.2%
VOC:	250 g/l max
Flash Point	0° F (-17° C) Closed Cup
Brookfield Viscosity	2,600 Centipoises
Avg Net Weight	8.1 lbs. / gallon (3.7 Kg)
Packaging	5 Gallon Pails
Shelf Life	1 Year

LEED Information	
Pre-consumer Recycled Content	0%
Post-consumer Recycled Content	0%
Manufacturing Location	Carlisle, PA
VOC Content	< 250 g/L

*General properties. Typical properties and characteristics are based on samples tested and are not guaranteed for all samples of this product. This data and information is intended as a guide and does not reflect the specification or specification range for any particular property of this product.

PACKAGING

Packaged in 5 gallon pails

BENEFITS & SUPPLEMENTAL STATEMENTS

- High strength adhesive with quick bonding characteristics
- Ease of application with a medium nap roller
- Provides excellent adhesion between EPDM membranes and a variety of substrates
- Provides quicker flash-off time in cold weather than other Low Voc Adhesives
- Lower viscosity results in easier application, even in cold weather

MULE-HIDE BONDING ADHESIVE

CODE APPROVALS/COMPLIANCE

A variety of Factory Mutual Ratings and Underwriter Laboratory Classifications are available. Contact Mule-Hide Technical Department for additional information.

COVERAGE RATES

Coverage for Mule-Hide Bonding Adhesive is approximately 60 ft² (5.6 square m) per gallon (finished surface.) This coverage rate is an average and may vary due to conditions on the job site. Porous surfaces and substrates may require more bonding adhesive than the typical coverage rate.

INSTALLATION TEMPERATURE

If adhesive is store at temperatures less than 60° F, restore to room temperature (~70° F) before using.

INSTALLATION INSTRUCTIONS

Surface Preparation

1. The surface, on or against which adhesive is to be applied, shall be clean, smooth, dry, free of fins, sharp edges, loose and foreign materials, oil and grease. Depressions greater than 1/4" (6 mm) should be feathered; using epoxy, mortar or other approved patching material. All sharp projections shall be removed by sweeping, blowing or vacuum cleaning.

Mixing

1. **Stir thoroughly until all settled pigments are dispersed and the adhesive is uniform in color. Stir adhesive for a minimum of 5 minutes.**

Application

1. After thorough stirring (minimum 5 minutes), apply Low VOC Bonding Adhesive to substrate and membrane using a 9" (228 mm) wide, ½" (13mm) medium nap roller. Application shall be continuous and uniform avoiding globs or puddles. An open time of 5 to 90 minutes, based on drying conditions is recommended before assembly. Low VOC Bonding Adhesive must be allowed to dry until tacky but does not string or stick to a dry finger touch. Any coated area, which has been exposed to rain, should be allowed to dry and then recoated. **Do not apply adhesive to seam areas or use with taped products.**

2. Roll the membrane onto the adhesive coated substrate while avoiding wrinkles. Immediately brush down the bonded portion of the sheet with a soft bristle push broom or a clean dry roller applicator to achieve maximum contact. In some applications, swelling of the membrane may occur initially, but this will disappear after several days' exposure. Do not re-broom membrane in an attempt to remove swelling.

   REVIEW CURRENT MULE-HIDE SPECIFICATIONS AND DETAILS FOR SPECIFIC APPLICATION REQUIREMENTS.

Precautions

1. Review the applicable Material Safety Data Sheet for complete safety information prior to use.

2. Low-VOC Bonding Adhesive must be stored in original, unopened containers at temperatures between 60ºF (15ºC) and 90ºF (32ºC). Jobsite storage in excess of 90ºF (32ºC) may affect product shelf life.

MULE-HIDE Low VOC BONDING ADHESIVE

Precautions (continued)

3. Prolonged exposure to below freezing temperatures will cause the adhesive to thicken and solidify in the can. Should the Low-VOC Bonding Adhesive be stored at temperatures lower than 25ºF (-4ºC), restore to room temperature for a minimum of 24 hours prior to use. Adhesive will perform as intended once it is returned to a liquid state. When temperatures are expected to be consistently below 40ºF (4ºC), a heated enclosure or hot box is required for storage.

4. Mule-Hide Bonding Adhesive is **EXTREMELY FLAMMABLE** -It contains solvents that are dangerous fire and explosion hazards when exposed to heat, flame or sparks. Do not smoke while applying. Do not use in a confined or unventilated area. Vapors are heavier than air and may travel along ground or may be moved by ventilation and ignited by pilot lights, other flames, sparks, heaters, smoking, electrical motors, static discharge, or other ignition sources at locations distant from material handling point and flashback. All containers should be grounded when material is transferred from one container to another. A red caution label is required when shipping. A fire extinguisher should be available. In case of fire, use water spray, foam, dry chemical or carbon dioxide. Do not use a solid stream of water because it can scatter and spread the fire.

5. Avoid breathing vapors. Keep container closed when not in use. Use with adequate ventilation. If inhaled, remove to fresh air. If not breathing, perform artificial respiration. If breathing is difficult, give oxygen. Call a physician immediately. During application, efforts must be made to prevent fumes from entering the building via air ventilation ducts. Do not place open containers or mix adhesive near fresh air intake units. When possible, shut down or seal off the closest units.

6. If swallowed, **DO NOT INDUCE VOMITING.** Call a physician immediately.

7. Avoid contact with skin. Wash hands thoroughly after handling. In case of contact with skin, thoroughly wash affected area with soap and water. Contact physician if irritation persists. **Note:** Permeation resistant gloves (that meet ANSI/ISEA 105-2005) are recommended to be worn when using this product to protect hands from irritating ingredients.

8. Avoid contact with eyes. Safety glasses or goggles are recommended. If splashed in eyes, immediately flush eyes with plenty of clean water for at least 15 minutes. Contact a physician immediately.

9. Do not thin Low-VOC Bonding Adhesive. Thinning will affect performance. Excessively thick or gelled material should be discarded.

10. These materials are sensitive to ambient moisture and heat will accelerate the effect of moisture. Opened containers of Bonding Adhesive should be used within 48 hours. Adhesive will begin to thicken after this point, making it difficult and eventually impossible, to control adhesive thickness. In hot weather, do leave sealed containers on roof for prolonged periods of time. In cold weather, keep material at room temperature until ready to use. Stir adhesive occasionally while using.

11. Adhesive must be allowed to dry thoroughly. If membrane is mated with the substrate prior to the adhesive being dry, blistering will occur.

12. Coverage rates are an average and may vary due to jobsite conditions.

13. **KEEP OUT OF THE REACH OF CHILDREN**

MULE-HIDE BONDING ADHESIVE

STORAGE & HANDLING

Job site storage in excess of 90°F (32°C) may affect product shelf life. Should the Mule-Hide Bonding Adhesive be stored at temperatures lower than 60°F (15°C), restore to room temperature prior to use.

PROTECTION & SAFETY

Mule-Hide maintains Material Safety Data Sheets on all of its products. Material Safety Data Sheets contain health and safety information for your development of appropriate product handling procedures to protect your employees and customers. Mule-Hide's Material Safety Data Sheets should be read and understood by all of your supervisory personnel and employees before using Mule-Hide products in your facilities.

ADDITIONAL INFORMATION

The information given on this PDS is subject to change without notice. Always check the Mule-Hide website at www.mulehide.com for the latest information, changes and updates or contact Mule-Hide Products Company at 800-786-1492.

DISCLAIMER

The statements provided concerning the material shown are intended as a guide for material usage and are believed to be true and accurate at the time of printing. No statement made by anyone may supersede this information, except when done in writing by Mule-Hide Products Co., Inc. Since the manner of use is beyond our control, Mule-Hide does not authorize anyone to make any warranty of merchantability or fitness for any particular purpose or any other warranty, guarantee or representation, expressed or implied, concerning this material. This product may be eligible for a Mule-Hide warranty, please check the Mule-Hide website at www.mulehide.com or contact Mule-Hide directly at 800-786-1492 for details. Buyer and user accept the product under these conditions and assume the risk of any failure, any injury person or property (including that of the user), loss or liability resulting from the handling, storage or use of the product whether or not it is handled, stored or used in accordance with the directions or specifications. Mule-Hide must be notified in writing of any claims and be given the opportunity to inspect the alleged failure before repairs are made.

Mule-Hide Products Co., Inc.
1195 Prince Hall Dr.
Beloit, WI 53511

PRODUCT DATA SHEET
PDS 09-2415
Revision Date: April 2013

Low VOC BONDING ADHESIVE 1168

PRODUCT DESCRIPTION

Low VOC Bonding Adhesive 1168 is a high strength solvent-based contact adhesive that allows bonding of EPDM and TPO membranes to various porous and non-porous substrates. It is specially formulated using a blend of VOC exempt and non-exempt solvents to be meet the < 250 g/l VOC content requirements of the OTC Model Rule for Single Ply Roofing Adhesives.

This product COMPLIES with the following California counties' VOC regulations: Alameda, Contra Costa, El Dorado, Los Angeles, Marin, Napa, Orange, Riverside, Sacramento, San Bernardino, San Diego, San Francisco, San Mateo, Santa Clara, Solano, Sonoma, and Tehama.

BASIC USES

Mule-Hide Bonding Adhesive is used for bonding cured flashings and membranes to a variety of

TYPICAL PHYSICAL PROPERTIES

Typical values*	
Base Material	Synthetic Rubber
Color	Yellow
Solids	21.0%
VOC:	250 g/l max
Flash Point	0° F (-17° C) Closed Cup
Brookfield Viscosity	5,000 Centipoises
Avg Net Weight	10.5 lbs. / gallon (4.76 Kg)
Packaging	5 Gallon Pails
Shelf Life	1 Year

*General properties. Typical properties and characteristics are based on samples tested and are not guaranteed for all samples of this product. This data and information is intended as a guide and does not reflect the specification or specification range for any particular property of this product.

PACKAGING

5 Gallon Pails

BENEFITS & SUPPLEMENTAL STATEMENTS

- High strength adhesive with quick bonding characteristics
- Ease of application with a medium nap roller
- Provides excellent adhesion between EPDM or TPO membranes and a variety of substrates

CODE APPROVALS/COMPLIANCE

A variety of Factory Mutual Ratings and Underwriter Laboratory Classifications are available. Contact Mule-Hide Technical Department for additional information.

Low VOC BONDING ADHESIVE 1168

COVERAGE RATES

Coverage for Low VOC Bonding Adhesive 1168 is approximately 60 ft² (5.6 square m) per gallon (finished surface.) This coverage rate is an average and may vary due to conditions on the job site. Porous surfaces and substrates may require more bonding adhesive than the typical coverage rate.

INSTALLATION TEMPERATURE

If adhesive is store at temperatures less than 60° F, restore to room temperature (~70° F) before using.

INSTALLATION INSTRUCTIONS

Surface Preparation

1. The surface, on or against which adhesive is to be applied, shall be clean, smooth, dry, free of fins, sharp edges, loose and foreign materials, oil and grease. Depressions greater than 1/4" (6 mm) should be feathered; using epoxy, mortar or other approved patching material. All sharp projections shall be removed by sweeping, blowing or vacuum cleaning.

Mixing

MIXING: Stir thoroughly until all settled pigments are dispersed and the cement is uniform in color. Minimum 5 minutes stirring is recommended.

Application

1. After thorough stirring (minimum 5 minutes), apply Low VOC Bonding Adhesive 1168 to substrate and membrane using a 9" (228mm) wide, ½" (13 mm) medium nap roller. Application shall be continuous and uniform avoiding globs or puddles. An open time of 5 to 90 minutes, based on drying conditions is recommended before assembly. Low VOC Bonding Adhesive 1168 must be allowed to dry until it does not string or stick to a dry finger touch. Any coated area, which has been exposed to rain, should be allowed to dry and then recoated. **Do not apply adhesive to splice areas to be seamed.**

2. Roll the membrane onto the adhesive coated substrate while avoiding wrinkles. Immediately brush down the bonded portion of the sheet with a soft bristle push broom or a clean dry roller applicator to achieve maximum contact. In some applications, swelling of the membrane may occur initially, but this will disappear after several days' exposure. Do not re-broom membrane in an attempt to remove swelling.

   Note: This adhesive may be slightly thicker than standard Low-VOC Bonding Adhesive and may require a longer drying time.

   REVIEW CURRENT MULE-HIDE SPECIFICATIONS AND DETAILS FOR SPECIFIC APPLICATION REQUIREMENTS.

Precautions

1. Review the applicable Material Safety Data Sheet for complete safety information prior to use.

Low VOC BONDING ADHESIVE 1168

Precautions - continued

2. Low-VOC VOC Bonding Adhesive must be stored in original, unopened containers at temperatures between 60ºF (15ºC) and 90ºF (32ºC). Jobsite storage in excess of 90ºF (32ºC) may affect product shelf life. Prolonged exposure to below freezing temperatures will cause the adhesive to thicken and solidify in the can. Should the Low-VOC Bonding Adhesive be stored at temperatures lower than 25ºF (-4ºC), restore to room temperature for a minimum of 24 hours prior to use. Adhesive will perform as intended once it is returned to a liquid state. When temperatures are expected to be consistently below 40ºF (4ºC), a heated enclosure or hot box is required for storage.

3. Low VOC Bonding Adhesive 1168 is **EXTREMELY FLAMMABLE** -It contains solvents that are dangerous fire and explosion hazards when exposed to heat, flame or sparks. Do not smoke while applying. Do not use in a confined or unventilated area. Vapors are heavier than air and may travel along ground or may be moved by ventilation and ignited by pilot lights, other flames, sparks, heaters, smoking, electrical motors, static discharge, or other ignition sources at locations distant from material handling point and flashback. All containers should be grounded when material is transferred from one container to another. A red caution label is required when shipping. A fire extinguisher should be available. In case of fire, use water spray, foam, dry chemical or carbon dioxide. Do not use a solid stream of water because it can scatter and spread the fire.

4. Avoid breathing vapors. Keep container closed when not in use. Use with adequate ventilation. If inhaled, remove to fresh air. If not breathing, perform artificial respiration. If breathing is difficult, give oxygen. Call a physician immediately. During application, efforts must be made to prevent fumes from entering the building via air ventilation ducts. Do not place open containers or mix adhesive near fresh air intake units. When possible, shut down or seal off the closest units.

5. If swallowed, **DO NOT INDUCE VOMITING.** Call a physician immediately.

6. Avoid contact with skin. Wash hands thoroughly after handling. In case of contact with skin, thoroughly wash affected area with soap and water. Contact physician if irritation persists. **Note:** Permeation resistant gloves (that meet ANSI/ISEA 105-2005) are recommended to be worn when using this product to protect hands from irritating ingredients.

7. Avoid contact with eyes. Safety glasses or goggles are recommended. If splashed in eyes, immediately flush eyes with plenty of clean water for at least 15 minutes. Contact a physician immediately.

8. Do not thin Low VOC Bonding Adhesive 1168. Thinning will affect performance. Excessively thick or gelled material should be discarded.

9. Opened containers of Low VOC Bonding Adhesive 1168 should be used within 48 hours. Adhesive will begin to thicken after this point, making it difficult and eventually impossible, to control applied thickness. In hot weather, do not leave sealed containers on roof for prolonged periods of time. In cold weather, keep material at room temperature until ready to use. Stir adhesive occasionally while using.

10. **Adhesive must be allowed to dry thoroughly.** If membrane is mated with the substrate prior to the adhesive being dry, blistering will occur and not subside over time.

11. **KEEP OUT OF THE REACH OF CHILDREN**

STORAGE & HANDLING

Job site storage in excess of 90°F (32°C) may affect product shelf life. Should the Low VOC Bonding Adhesive 1168 be stored at temperatures lower than 60°F (15°C), restore to room temperature prior to use.

Low VOC BONDING ADHESIVE 1168

PROTECTION & SAFETY

Mule-Hide maintains Material Safety Data Sheets on all of its products. Material Safety Data Sheets contain health and safety information for your development of appropriate product handling procedures to protect your employees and customers. Mule-Hide's Material Safety Data Sheets should be read and understood by all of your supervisory personnel and employees before using Mule-Hide products in your facilities.

ADDITIONAL INFORMATION

The information given on this PDS is subject to change without notice. Always check the Mule-Hide website at www.mulehide.com for the latest information, changes and updates or contact Mule-Hide Products Company at 800-786-1492.

DISCLAIMER

The statements provided concerning the material shown are intended as a guide for material usage and are believed to be true and accurate at the time of printing. No statement made by anyone may supersede this information, except when done in writing by Mule-Hide Products Co., Inc. Since the manner of use is beyond our control, Mule-Hide does not authorize anyone to make any warranty of merchantability or fitness for any particular purpose or any other warranty, guarantee or representation, expressed or implied, concerning this material. This product may be eligible for a Mule-Hide warranty, please check the Mule-Hide website at www.mulehide.com or contact Mule-Hide directly at 800-786-1492 for details. Buyer and user accept the product under these conditions and assume the risk of any failure, any injury person or property (including that of the user), loss or liability resulting from the handling, storage or use of the product whether or not it is handled, stored or used in accordance with the directions or specifications. Mule-Hide must be notified in writing of any claims and be given the opportunity to inspect the alleged failure before repairs are made.

Mule-Hide Products Co., Inc.
1195 Prince Hall Dr.
Beloit, WI 53511

WBBA 2000

PRODUCT DESCRIPTION

WBBA 2000 is a semi pressure-sensitive water base bonding adhesive that can be used with Mule-Hide fleece back membranes as well as standard (non fleece back) EPDM, TPO, and PVC membranes. WBBA 2000 offers high peel strength with low-VOCs and no strong odors.

BASIC USES

WBBA 2000 bonding adhesive can be used as a single side, wet lay-in adhesive on horizontal surfaces with our Mule-Hide fleece back membranes. It can also be used as a two-sided, contact adhesive with our standard (non-fleece back) EPDM, TPO and PVC roofing membranes on both vertical and horizontal surfaces.

TYPICAL PHYSICAL PROPERTIES

Typical values*	
Base Material	Acrylic
Color	White (translucent when dry)
Solids	62.5%
VOC:	8 g/l max
Flash Point	None
Brookfield Viscosity	16,000 Centipoises
Avg Net Weight	8.8 lbs. / gallon (3.99 Kg)
Packaging	5 Gallon Pails
Shelf Life	1 Year

*General properties. Typical properties and characteristics are based on samples tested and are not guaranteed for all samples of this product. This data and information is intended as a guide and does not reflect the specification or specification range for any particular property of this product.

PACKAGING

5 Gallon Pails

COVERAGE RATES

Fleece Back Membranes - Single-side, wet lay-in: Coverage rate for WBBA 2000 applied as single side, wet lay-in is approximately 100 to 120 ft² (10.2 square m) of finished surface per gallon

Standard (non-fleece back) Membranes - Double-sided, contact lay-in: Coverage rate for WBBA 2000 applied as double sided, contact lay-in is approximately 50 to 60 ft² (5.1 square m) of finished surface per gallon (membrane and substrate).

These coverage rates are an average and may vary due to conditions on the job site. Porous surfaces and substrates may require more bonding adhesive than the typical coverage rate information shown above.

INSTALLATION TEMPERATURE

Adhesive is designed to be applied when ambient temperature is 40°F (4°C) and rising. Do not apply if ambient temperature will drop below 32°F (0°C) before adhesive completely dries.

DO NOT ALLOW PRODUCT TO FREEZE. Frozen product is un-usable and must be discarded.

WBBA 2000

INSTALLATION INSTRUCTIONS

1. The surface to which adhesive is to be applied must be clean, smooth, dry, free of fins, sharp edges, loose and foreign materials. Depressions or offsets greater than ¼" should be feathered using epoxy, mortar or other approved material. All sharp projections shall be removed by sweeping, blowing or vacuum cleaning.

2. WBBA 2000 bonding adhesive is approved for use on (max) 15-year warranties over Polyiso, Dens Deck Prime, High Density Fiberboard, OSB, Plywood, cellular lightweight concrete and structural concrete.

3. Mix adhesive thoroughly scraping the sides and bottom of the can (minimum of 5 minutes is required) until adhesive is uniform in color.

4. Using a ¼" or ⅜" nap roller apply adhesive in a uniform manner avoiding globs, puddles and holidays (uncoated areas). Avoid accumulation of adhesive between insulation joints. Do not exceed published application rates.

Single Side (wet lay-in) Application with Fleece Back Membranes

1. Apply a smooth even coating of WBBA 2000 bonding adhesive to the substrate at the rate of 100 to 120 square feet per gallon and immediately roll the fleece back membrane into the wet adhesive.

2. Once the membrane has been mated to the substrate, broom the membrane with a stiff bristled push broom to ensure proper contact and 100% adhesion.

4. WBBA 2000 bonding adhesive can be applied with a 1/8" notched squeegee or a medium nap roller. Note: Adhesive must be wet at time of membrane placement.

5. Do not apply adhesive in seam lap areas that are to be heat welded.

Two-Sided Contact Application with Standard (non- fleece back) Membranes - Horizontal Surfaces

1. Apply a smooth, even coat of WBBA 2000 bonding adhesive to the back side of the membrane and substrate. Do not apply adhesive in area of seam laps.

2. Coverage rate to be approximately:
   120 square feet per gallon for one surface (membrane or substrate only) or
   60 square feet per gallon per finished surface (membrane and substrate)

3. Allow adhesive to dry until it turns translucent and does not transfer to a dry finger or pull away from the substrate. WBBA 2000 bonding adhesive will take a longer time to dry. Adhesive must be dry but still tacky (but not string) when the sheet is mated to the substrate. Do not allow to over dry.

4. Mate surfaces together avoiding wrinkles. Immediately roll the bonded area of the sheet with a 100 to 150 lbs roller to ensure full contact. It is important to thoroughly roll the membrane over all insulation joints. Repeat this procedure for remaining sheets.

5. Extended drying times can be expected during cool, overcast, humid, shaded, or late day applications. The adhesive must be dry (but still tacky) before mating surfaces to avoid permanent blisters due to trapped moisture or a lack of sufficient adhesion.

WBBA 2000

Standard Membrane (vertical walls two-sided contact application)

1. Apply a smooth, even coat of WBBA 2000 bonding adhesive to the back side of the membrane and substrate. Do not apply adhesive in area of seam laps.

2. Coverage rate to be approximately:
   120 square feet per gallon for one surface (membrane or substrate only) or
   60 square feet per gallon per finished surface (membrane and substrate)

3. Allow adhesive to dry until it turns translucent and does not transfer to a dry finger or pull away from the substrate. WBBA 2000 bonding adhesive will take a longer time to dry. Adhesive must be dry but still tacky (but not string) when the sheet is mated to the vertical surface. Do not allow to over dry.

4. Mate surfaces together avoiding wrinkles. Immediately roll the bonded area of the sheet with a 2-inch wide rubber hand roller to promote maximum positive contact between the membrane and the substrate. Overlap all adjacent flashing sheets a minimum of 2 inches. The Heat-Weld Membrane Flashings shall extend a minimum of 6 inches onto the field sheet and be securely adhered. There shall be a minimum 2 inches hot-air weld in front of the fastener plates. All side laps are to overlap a minimum of 2 inches.

5. Extended drying times can be expected during cool, overcast, humid, shaded, or late day applications. The adhesive must be dry (but still tacky) before mating surfaces to avoid permanent blisters due to trapped moisture or lack of sufficient adhesion...

Precautions

1. Review the applicable Material Safety Data Sheet for complete safety information prior to use.

2. Avoid breathing vapors. Keep container closed when not in use. Use with adequate ventilation. If inhaled, remove to fresh air.

3. If swallowed, **DO NOT INDUCE VOMITING.** Call a physician immediately.

4. Avoid contact with skin. Wash hands thoroughly after handling. In case of contact with skin, thoroughly wash affected area with soap and water.

5. Avoid contact with eyes. Safety glasses or goggles are recommended. If splashed in eyes, immediately flush eyes with plenty of clean water for at least 15 minutes. Contact a physician immediately.

6. Do not thin WBBA 2000. Thinning will affect performance and may coagulate the adhesive.

7. Job site storage in excess of 90°F (32°C) may affect product shelf life. DO NOT ALLOW WBBA 2000 TO FREEZE. Do not store below 40°F.

8. WBBA 2000 will turn translucent or clear when completely dry. Dry time is dependent upon ambient conditions.

9. WBBA 2000 is to be used when ambient temperatures are 40°F (4°F and rising. Do not apply if ambient temperature will drop below 32°F (0°F) before adhesive completely dries.

10. Open containers of WBBA 2000 should be used within 48 hours. Adhesive will form a thick skin in the container that will not dissolve. Remaining adhesive can be used once the skinned layer has been removed.

WBBA 2000

Precautions (continued)

11. Extended drying times can be expected in cool or humid conditions as well as shaded areas. Not allowing the adhesive to properly dry in a two-sided contact adhesive application will result in poor adhesive strength and/or blisters occurring over time.

12. Keep out of reach of children.

STORAGE & HANDLING

Job site storage in excess of 90°F (32°C) may affect product shelf life. DO NOT ALLOW WBBA 2000 TO FREEZE. Do not store below 40°F.

PROTECTION & SAFETY

Mule-Hide maintains Material Safety Data Sheets on all of its products. Material Safety Data Sheets contain health and safety information for your development of appropriate product handling procedures to protect your employees and customers. Mule-Hide's Material Safety Data Sheets should be read and understood by all of your supervisory personnel and employees before using Mule-Hide products in your facilities.

ADDITIONAL INFORMATION

The information given on this PDS is subject to change without notice. Always check the Mule-Hide website at www.mulehide.com for the latest information, changes and updates or contact Mule-Hide Products Company at 800-786-1492.

DISCLAIMER

The statements provided concerning the material shown are intended as a guide for material usage and are believed to be true and accurate at the time of printing. No statement made by anyone may supersede this information, except when done in writing by Mule-Hide Products Co., Inc. Since the manner of use is beyond our control, Mule-Hide does not authorize anyone to make any warranty of merchantability or fitness for any particular purpose or any other warranty, guarantee or representation, expressed or implied, concerning this material. This product may be eligible for a Mule-Hide warranty, please check the Mule-Hide website at www.mulehide.com or contact Mule-Hide directly at 800-786-1492 for details. Buyer and user accept the product under these conditions and assume the risk of any failure, any injury person or property (including that of the user), loss or liability resulting from the handling, storage or use of the product whether or not it is handled, stored or used in accordance with the directions or specifications. Mule-Hide must be notified in writing of any claims and be given the opportunity to inspect the alleged failure before repairs are made.

Mule-Hide Products Co., Inc.
1195 Prince Hall Dr.
Beloit, WI 53511

PRODUCT DATA SHEET
PDS 09-2510
Revision Date: Jan-2014

ACRYLIC WATER BASE BONDING ADHESIVE

PRODUCT DESCRIPTION

Acrylic Water Base Bonding Adhesive is an acrylic latex-based adhesive with superior bonding performance used to bond EPDM membranes to approved horizontal substrates. The product is white in color when wet and is clear when dry. The solids content is approximately 60%, and the overall texture is similar to latex paint.

BASIC USES

Used as a single-side (wet lay in) adhesive over porous horizontal surfaces (max slope of 2:12) such as plywood, OSB, wood, high density fiberboard, Dens Deck Prime, Securock Gypsum-Fiber Roof Board, FR Deck Panel (modular use only) or Pryo-Guard (modular use only). Adhesive is applied to the acceptable substrate and the sheet is immediately rolled in place into the white, wet adhesive. While the adhesive is still wet; the EPDM membrane may be moved and adjusted to remove any wrinkles. Working time before set-up takes place is approximately 15 to 20 minutes. As this product is water based and contains no solvents, actual drying time is dependent on temperature and humidity.

PACKAGING

Packaged in 1 gallon pails, 5 gallon pails, 55 gallon drums and 330 gallon totes.

BENEFITS & SUPPLEMENTAL STATEMENTS

- Non-flammable and non-toxic
- Once set, will not break down when immersed in water for prolonged periods of time.
- Application temperature performance is satisfactory above 45° F and below 165° F.
- Installs easily and smoothly, which speeds up operations.
- Can be re-sealed in container without set taking place.

CODE APPROVALS/COMPLIANCE

A variety of Factory Mutual Ratings and Underwriter Laboratory Classifications are available. Contact Mule-Hide Technical Department for additional information.

COVERAGE RATES

Approximately 100 ft² to 120 ft² per gallon. This coverage rate is an average and may vary due to job site conditions and the porosity of the surface to which it is being applied.

INSTALLATION TEMPERATURE

Do not use adhesive if ambient temperature is below 45°F or if night time temperatures are expected to fall below 40°F within 48 hours after application.

CAUTION: Product must be stored above 60° F. Product cannot be used once frozen.

Do not let Mule-Hide Water Base Bonding Adhesive freeze

ACRYLIC WATER BASE BONDING ADHESIVE

INSTALLATION INSTRUCTIONS

Surface Preparation

1. The surface on which adhesive is to be applied shall be clean, smooth, dry, free of fins, sharp edges, loose and foreign materials, oil and grease. Depressions greater than 1/4" should be feathered; using epoxy, mortar or other approved patching material. All sharp projections shall be removed by sweeping, blowing or vacuum cleaning.

Application (wet lay-in only to horizontal surfaces)

1. Adhesive can be sprayed, rolled or brushed on to acceptable substrates.

2. Once the EPDM membrane has been positioned and given sufficient time to relax, fold the membrane in half exposing the acceptable substrate to be adhered. Starting at the fold, apply adhesive to substrate only at the rate of 100 to 120 square feet per gallon. As you proceed with the adhesive, immediately roll membrane into **wet**, white adhesive. Lay the membrane into the adhesive as soon as possible. This ensures the wetting of the EPDM surface. Do not apply to a large area that will permit the adhesive to start to tack before you can lay the membrane into it. The membrane must be laid into the adhesive while it is wet. If the adhesive starts to turn clear you must apply more adhesive.

3. Once half of the sheet is in place, use a push broom to sweep the surface, keeping a steady pressure with the broom against the surface of the sheet, mating surfaces and eliminating captured air between the membrane and substrate (deck). If any wrinkles are present, re-position the sheet by using a push broom or by hand to remove the wrinkle. Repeat the procedure for the second half of the sheet.

4. NOTE: Traffic over membrane should be held to a minimum. Footprints will be evident on surface of sheet if foot traffic occurs. Footprints should be immediately broomed and will be less visible once the adhesive cures.

Precautions

1. Review the applicable Material Safety Data Sheet for complete safety information prior to use.

2. If swallowed, **DO NOT INDUCE VOMITING.** Call a physician immediately.

3. Avoid contact with skin. Wash hands thoroughly after handling. In case of contact with skin, thoroughly wash affected area with soap and water. Contact physician if irritation persists

4. Avoid contact with eyes. Safety glasses or goggles are recommended. If splashed in eyes, immediately flush eyes with plenty of clean water for at least 15 minutes. Contact a physician immediately

5. Do not thin Mule-Hide Acrylic Water Based Bonding Adhesive. Thinning will affect performance.

6. Do not allow Mule-Hide Acrylic Water Base Bonding Adhesive to freeze. Material that has frozen must be discarded.

7. Coverage rates are an average and may vary due to jobsite conditions.

8. **KEEP OUT OF THE REACH OF CHILDREN**

ACRYLIC WATER BASE BONDING ADHESIVE

CLEAN UP

The adhesive can be removed from hands when wet with water and a light detergent. When dry, use a solvent followed by soap and water.

With spray equipment, use water followed by solvent cleaners, followed by water with detergent.
Paint roller covers can be left in material until next usage or cleaned with water when wet.

Material spillage can be removed easily with water when wet. If adhesive has dried, peel off as much surface adhesive as possible and clean area with solvent until removed.

STORAGE & HANDLING

Store in unopened original containers at 60° F - 80° F for maximum storage life. Higher temperatures reduce normal storage life. **DO NOT ALLOW TO FREEZE.** Rotate stock. **Do not double-stack pallets**

PROTECTION & SAFETY

Mule-Hide maintains Material Safety Data Sheets on all of its products. Material Safety Data Sheets contain health and safety information for your development of appropriate product handling procedures to protect your employees and customers. Mule-Hide's Material Safety Data Sheets should be read and understood by all of your supervisory personnel and employees before using Mule-Hide products in your facilities.

ADDITIONAL INFORMATION

The information given on this PDS is subject to change without notice. Always check the Mule-Hide website at www.mulehide.com for the latest information, changes and updates or contact Mule-Hide Products Company at 800-786-1492.

DISCLAIMER

The statements provided concerning the material shown are intended as a guide for material usage and are believed to be true and accurate at the time of printing. No statement made by anyone may supersede this information, except when done in writing by Mule-Hide Products Co., Inc. Since the manner of use is beyond our control, Mule-Hide does not authorize anyone to make any warranty of merchantability or fitness for any particular purpose or any other warranty, guarantee or representation, expressed or implied, concerning this material. This product may be eligible for a Mule-Hide warranty, please check the Mule-Hide website at www.mulehide.com or contact Mule-Hide directly at 800-786-1492 for details. Buyer and user accept the product under these conditions and assume the risk of any failure, any injury person or property (including that of the user), loss or liability resulting from the handling, storage or use of the product whether or not it is handled, stored or used in accordance with the directions or specifications. Mule-Hide must be notified in writing of any claims and be given the opportunity to inspect the alleged failure before repairs are made.

Mule-Hide Products Co., Inc.
1195 Prince Hall Dr.
Beloit, WI 53511

PRODUCT DATA SHEET
PDS 09-3105
Revision Date: Jan-2014

WEATHERED MEMBRANE CLEANER

PRODUCT DESCRIPTION

Weathered Membrane Cleaner is a clear liquid solvent used to clean EPDM and TPO membranes.

BASIC USES

Weathered Membrane Cleaner is used to clean both new and in-service EPDM and TPO membranes prior to the seaming process. This cleaner helps to loosen and remove dirt and other contaminants from the surface of the EPDM and TPO-c membranes and leaves a suitable surface for welding or the subsequent application of Tape Primer.

Not for use over PVC membranes.

TYPICAL PHYSICAL PROPERTIES

Typical Properties and Characteristics	
Color	Clear
Solids	0%
Flash Point	65ºF (18ºC)
Boiling Point	260ºF (127ºC)
Packaging	5-gallon (18.9 liter) closed top pail Cartons of 2 x 1-gallon (3.8 liter) closed top pail
Typical properties and characteristics are based on samples tested and are not guaranteed for all samples of this product. This data and information is intended as a guide and does not reflect the specification or specification range for any particular property of this product.	

LEED Information	
Pre-consumer recycle content	0%
Post-consumer recycle content	0%
Manufacturing Location	Carlisle, PA
VOC Content*	755 grams/liter
*This product is exempt from VOC regulations.	

BENEFITS & SUPPLEMENTAL STATEMENTS

- Easily removes dirt and other contaminates from EPDM and TPO membranes
- Prepares TPO membranes for welding and application of tapes
- Prepares EPDM membranes for application of primer, adhesives and tapes

COVERAGE RATES

Coverage rate depends on the age of the membrane and amount of dirt/debris on the surface. Coverage is approximately 400 square feet (one surface) per gallon

INSTALLATION INSTRUCTIONS

EPDM

1. Remove as much loose material as possible from the membrane surface where the adhesive or pressure-sensitive product will be applied by brooming or wiping the area with a dry rag. Extreme conditions of accumulated dirt may require a low sudsing detergent and water cleaning (rinse area thoroughly with CLEAN water and allow to dry).

WEATHERED MEMBRANE CLEANER

INSTALLATION INSTRUCTIONS (continued)

2. Saturate a clean rag with Weathered Membrane Cleaner. SCRUB the area in a circular motion. Continue to clean the area, changing rags frequently, until the surface is a consistent color with no streaking. Additional cleaning is required at factory seams (scrub parallel to the seam). Allow to dry.
3. Apply primer according to product instructions and/or roofing system specification.

TPO – New

1. Saturate a clean rag with Weathered Membrane Cleaner.
2. Wipe the area to be cleaned until the membrane is a consistent color with no streaking and allow to dry.
3. Weld the cleaned membrane together with an appropriate hot-air welder.

TPO - Aged

1. Using a Scotch-Brite® pad and Weathered Membrane Cleaner, scrub the area to be welded. (the cleaner will become white with membrane residue during this application step)
2. Clean all residue from the area to be welded using a rag soaked with Weathered Membrane Cleaner. Allow to dry.
3. Weld the cleaned material together using an appropriate hot-air welder.
   Review Mule-Hide Specifications and Details for additional information.

PRECAUTIONS

1. Review the applicable Material Safety Data Sheet for complete safety information prior to use
2. Weathered Membrane Cleaner is **EXTREMELY FLAMMABLE** -It contains solvents that are dangerous fire and explosion hazards when exposed to heat, flame or sparks. Do not smoke while applying. Do not use in a confined or unventilated area. Vapors are heavier than air and may travel along ground or may be moved by ventilation and ignited by pilot lights, other flames, sparks, heaters, smoking, electrical motors, static discharge, or other ignition sources at locations distant from material handling point and flashback. All containers should be grounded when material is transferred from one container to another. A red caution label is required when shipping. A fire extinguisher should be available. In case of fire, use water spray, foam, dry chemical or carbon dioxide. Do not use a solid stream of water because it can scatter and spread the fire.
3. Avoid breathing vapors. Keep container closed when not in use. Use with adequate ventilation. If inhaled, remove to fresh air. If not breathing, perform artificial respiration. If breathing is difficult, give oxygen. Call a physician immediately. During application, efforts must be made to prevent fumes from entering the building via air ventilation ducts. Do not place open containers or mix adhesive near fresh air intake units. When possible, shut down or seal off the closest units.
4. If swallowed, **DO NOT INDUCE VOMITING.** Call a physician immediately.
5. Avoid contact with skin. Wash hands thoroughly after handling. In case of contact with skin, thoroughly wash affected area with soap and water. Contact physician if irritation persists. **Note:** Permeation resistant gloves (that meet ANSI/ISEA 105-2005) are recommended to be worn when using this product to protect hands from irritating ingredients.
6. Avoid contact with eyes. Safety glasses or goggles are recommended. If splashed in eyes, immediately flush eyes with plenty of clean water for at least 15 minutes. Contact a physician immediately.
7. **KEEP OUT OF REACH OF CHILDREN.**

WEATHERED MEMBRANE CLEANER

PROTECTION & SAFETY

Mule-Hide maintains Material Safety Data Sheets on all of its products. Material Safety Data Sheets contain health and safety information for your development of appropriate product handling procedures to protect your employees and customers. Mule-Hide's Material Safety Data Sheets should be read and understood by all of your supervisory personnel and employees before using Mule-Hide products in your facilities.

ADDITIONAL INFORMATION

The information given on this PDS is subject to change without notice. Always check the Mule-Hide website at www.mulehide.com for the latest information, changes and updates or contact Mule-Hide Products Company at 800-786-1492.

DISCLAIMER

The statements provided concerning the material shown are intended as a guide for material usage and are believed to be true and accurate at the time of printing. No statement made by anyone may supersede this information, except when done in writing by Mule-Hide Products Co., Inc. Since the manner of use is beyond our control, Mule-Hide does not authorize anyone to make any warranty of merchantability or fitness for any particular purpose or any other warranty, guarantee or representation, expressed or implied, concerning this material. This product may be eligible for a Mule-Hide warranty, please check the Mule-Hide website at www.mulehide.com or contact Mule-Hide directly at 800-786-1492 for details. Buyer and user accept the product under these conditions and assume the risk of any failure, any injury person or property (including that of the user), loss or liability resulting from the handling, storage or use of the product whether or not it is handled, stored or used in accordance with the directions or specifications. Mule-Hide must be notified in writing of any claims and be given the opportunity to inspect the alleged failure before repairs are made.

Mule-Hide Products Co., Inc.
1195 Prince Hall Dr.
Beloit, WI 53511

MULE-HIDE EPDM TAPE PRIMER

PRODUCT DESCRIPTION

Mule-Hide EPDM Tape Primer is a solvent-based product designed for one-step cleaning and priming of EPDM and TPO surfaces to be bonded with In-Seam Tapes, Uncured Flashing Tapes, Cured Cover Tapes, and Pre-Taped membranes.

BASIC USES

A product designed for one-step cleaning and priming of EPDM and TPO surfaces prior to the application of Taped Products. Also used with EPDM for application of In-Seam Tapes.

TYPICAL PHYSICAL PROPERTIES*

Base Material	Synthetic Rubber
Solids	18%
Flash Point	40ºF (4.4ºC)
VOC	727 grams/liter
Shelf Life	9 months
Average Weight	7.3 lbs./gallon (0.9 kg/liter)

*General properties. Typical properties and characteristics are based on samples tested and are not guaranteed for all samples of this product. This data and information is intended as a guide and does not reflect the specification or specification range for any particular property of this product.

COLORS

Olive Drab to Dark Gray

PACKAGING

1 gallon (3.8 liter) cans or 16 oz. (0.473 liter) screw top cans

BENEFITS & SUPPLEMENTAL STATEMENTS

Promotes excellent adhesion with Tape Products
One step cleaner and primer

COVERAGE RATES

Approximately 250 square feet / gallon

INSTALLATION TEMPERATURE

If primer is store at temperatures less than 60° F, restore to room temperature (~70° F) before using.

MULE-HIDE EPDM TAPE PRIMER

INSTALLATION INSTRUCTIONS

Surface Preparation

1. Remove all foreign material by brooming or washing with water. If membrane is very dirty, scrubbing with Weathered Membrane Cleaner may be necessary. This process is essential on membrane that has been exposed for a number of weeks.

Note: Permeation resistant gloves (that meet ANSI/ISEA 105-2005) are required for hand protection when cleaners or primers are being used.

Application

1. Thoroughly stir primer until all settled materials are blended into the solution.

2. Apply the primer with Scotch-Brite® pads or clean rags. Scrub the area of the membrane (where the Pre-Taped Sheet, Taped Product or Splicing Cement is to be applied) in a circular motion to achieve a thin, even coating on the membrane. The properly cleaned/primed area will be uniform in color without streaks and free of globs or puddles.

3. Note: The use of excessive amounts of Mule-Hide EPDM Primer will not significantly enhance the adhesion of the Pre-Taped or Taped Product to the EPDM or TPO membrane. Use only the amount necessary to obtain 100% coverage of the area where the tape or adhesive will be applied.

4. Allow the Mule-Hide EPDM Primer to dry until it does not transfer to a dry finger touch. Prompt installation of the In-Seam Tape or Taped Product as soon as the primer flashes off minimizes potential dust contamination and promotes adhesion in colder weather.

5. Complete the splice as specified in Mule-Hide's Specifications and Details.

   ** REVIEW CURRENT MULE-HIDE SPECIFICATIONS AND DETAILS FOR SPECIFIC APPLICATION REQUIREMENTS.

Precautions

1. This product is FLAMMABLE. Precautions must be taken to keep the primer away from heat, flame and sparks during storage and use.

2. Avoid contact with eyes and skin.

3. Avoid breathing vapors. Keep container closed when not in use. Use with adequate ventilation. If inhaled, remove to fresh air. If not breathing, perform artificial respiration. If breathing is difficult, give oxygen. Call a physician immediately. During application, efforts must be made to prevent fumes from entering the building via air ventilation ducts. Do not place open containers or mix adhesive near fresh air intake units. When possible, shut down or seal off the closest units.

4. If swallowed, DO NOT INDUCE VOMITING. Call a physician immediately.

MULE-HIDE EPDM TAPE PRIMER

5. Chemically-resistant gloves must be worn with Mule-Hide EPDM Primer to protect hands from staining and irritating ingredients.

6. Thoroughly stir this product until all settled pigment is blended into the solution. Solids suspended in Mule-Hide EPDM Primer tend to settle. Use Mule-Hide EPDM Primer full strength. Do not thin. Thinning will affect performance.

7. Mule-Hide EPDM Primer may cause staining of White-on-Black membrane and other non-black surfaces.

8. Due to solvent flash-off, condensation may form on freshly applied Mule-Hide EPDM Primer when the ambient temperature is near the dew point. If condensation develops, the application of primer must be discontinued (proper adhesion will not be obtained). Allow the surface to dry and apply a thin freshener coat of primer to the previously coated surface when conditions allow.

REVIEW THE MULE-HIDE EPDM PRIMER MATERIAL SAFETY DATA SHEET FOR COMPLETE SAFETY INFORMATION PRIOR TO USE.

KEEP OUT OF REACH OF CHILDREN.

STORAGE & HANDLING

Job site storage temperatures in excess of 90ºF (32ºC) may affect product shelf life. Should the primer be stored at temperatures lower than 60ºF (15ºC), restore to room temperature prior to use.

Keep can tightly closed when not in use and protect from moisture contamination. Once exposed to moisture in the air, Mule-Hide EPDM Primer begins to cure and may gel within a few days. A gasket of membrane or sealant can be used to create a positive seal.

PROTECTION & SAFETY

Mule-Hide maintains Material Safety Data Sheets on all of its products. Material Safety Data Sheets contain health and safety information for your development of appropriate product handling procedures to protect your employees and customers. Mule-Hide's Material Safety Data Sheets should be read and understood by all of your supervisory personnel and employees before using Mule-Hide products in your facilities.

ADDITIONAL INFORMATION

The information given on this PDS is subject to change without notice. Always check the Mule-Hide website at www.mulehide.com for the latest information, changes and updates or contact Mule-Hide Products Company at 800-786-1492.

DISCLAIMER

The statements provided concerning the material shown are intended as a guide for material usage and are believed to be true and accurate at the time of printing. No statement made by anyone may supersede this information, except when done in writing by Mule-Hide Products Co., Inc. Since the manner of use is beyond our control, Mule-Hide does not authorize anyone to make any warranty of merchantability or fitness for any particular purpose or any other warranty, guarantee or representation, expressed or implied, concerning this material. This product may be eligible for a Mule-Hide warranty, please check the Mule-Hide website at www.mulehide.com or contact Mule-Hide directly at 800-786-1492 for details. Buyer and user accept the product under these conditions and assume the risk of any failure, any injury person or property (including that of the user), loss or liability resulting from the handling, storage or use of the product whether or not it is handled, stored or used in accordance with the directions or specifications. Mule-Hide must be notified in writing of any claims and be given the opportunity to inspect the alleged failure before repairs are made.

Mule-Hide Products Co., Inc.
1195 Prince Hall Dr.
Beloit, WI 53511

PRODUCT DATA SHEET
PDS 09-3210
Revision Date: Nov-2013

LOW VOC EPDM PRIMER

PRODUCT DESCRIPTION

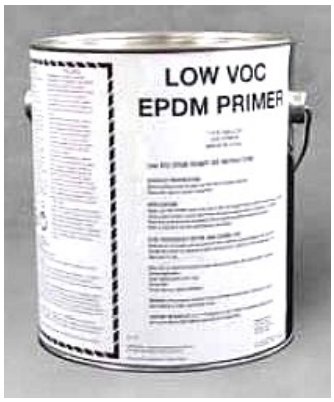

Low VOC EPDM Primer is a solvent-based product designed for one-step cleaning and priming of EPDM and TPO surfaces to be bonded with In-Seam Tapes, Uncured Flashing Tapes, Cured Cover Tapes, and Pre-Taped membranes. It is a Low VOC product that is ideal for use where environmental concerns are an issue.

BASIC USES

A Low VOC product designed for one-step cleaning and priming of EPDM and TPO surfaces prior to the application of In-Seam Tapes and other Taped Products.

TYPICAL PHYSICAL PROPERTIES*

Base Material	Synthetic Rubber
Solids	10-15%
Flash Point	40ºF (4.4ºC)
VOC	Less than 250 grams/liter
Shelf Life	9 months
Average Weight	9.8 lbs./gallon (1.2 kg/liter)

*General properties. Typical properties and characteristics are based on samples tested and are not guaranteed for all samples of this product. This data and information is intended as a guide and does not reflect the specification or specification range for any particular property of this product.

COLORS

Olive Drab to Dark Gray

PACKAGING

1 gallon (3.8 liter) cans

BENEFITS & SUPPLEMENTAL STATEMENTS

Promotes excellent adhesion with Tape Products
One step cleaner and primer
VOC less than 250 gpl

COVERAGE RATES

Approximately 250 square feet / gallon with Dusted Sheet

INSTALLATION TEMPERATURE

If primer is store at temperatures less than 60° F, restore to room temperature (~70° F) before using.

MIXING

Mixing is not recommended, even when settling has occurred. The Low-Voc EPDM Primer contains a non-partitioning agent that may settle to the bottom of the can. Do not attempt to break up or stir back into the primer.

LOW VOC EPDM PRIMER

INSTALLATION INSTRUCTIONS

Surface Preparation

1. Remove all foreign material by brooming or washing with water. If membrane is very dirty, scrubbing with Weathered Membrane Cleaner may be necessary. This process is essential on membrane that has been exposed for a number of weeks.

   Note: Permeation resistant gloves (that meet ANSI/ISEA 105-2005) are required for hand protection when cleaners or primers are being used.

Application

1. **Mixing is not recommended, even when settling has occurred.**

2. Apply the primer with Scotch-Brite® pads or clean rags. Scrub the area of the membrane (where the Pre-Taped Sheet, Taped Product or Splicing Cement is to be applied) in a circular motion to achieve a thin, even coating on the membrane. The properly cleaned/primed area will be uniform in color without streaks and free of globs or puddles.

3. Note: The use of excessive amounts of Low VOC EPDM Primer will not significantly enhance the adhesion of the Pre-Taped or Taped Product to the EPDM or TPO membrane. Use only the amount necessary to obtain 100% coverage of the area where the tape or adhesive will be applied.

4. Allow the Low VOC EPDM Primer to dry until it does not transfer to a dry finger touch. Prompt installation of the In-Seam Tape or Taped Product as soon as the primer flashes off minimizes potential dust contamination and promotes adhesion in colder weather.

5. Complete the splice as specified in Mule-Hide's Specifications and Details.

   ** REVIEW CURRENT MULE-HIDE SPECIFICATIONS AND DETAILS FOR SPECIFIC APPLICATION REQUIREMENTS.

Precautions

1. This product is FLAMMABLE. Precautions must be taken to keep the primer away from heat, flame and sparks during storage and use.

2. Avoid contact with eyes and skin.

3. Avoid breathing vapors. Keep container closed when not in use. Use with adequate ventilation. If inhaled, remove to fresh air. If not breathing, perform artificial respiration. If breathing is difficult, give oxygen. Call a physician immediately. During application, efforts must be made to prevent fumes from entering the building via air ventilation ducts. Do not place open containers or mix adhesive near fresh air intake units. When possible, shut down or seal off the closest units.

4. If swallowed, DO NOT INDUCE VOMITING. Call a physician immediately.

5. Chemically-resistant gloves must be worn with Low VOC EPDM Primer to protect hands from staining and irritating ingredients.

LOW VOC EPDM PRIMER

Precautions – continued

6. Solids suspended in Low VOC EPDM Primer tend to settle and **DO NOT NEED TO BE REMIXED**.. Stirring is not required. Use Low VOC EPDM Primer full strength. Do not thin. Thinning will affect performance.

7. Low VOC EPDM Primer may cause staining of White-on-Black membrane and other non-black surfaces.

8. Due to solvent flash-off, condensation may form on freshly applied Low VOC EPDM Primer when the ambient temperature is near the dew point. If condensation develops, the application of primer must be discontinued (proper adhesion will not be obtained). Allow the surface to dry and apply a thin freshener coat of primer to the previously coated surface when conditions allow.

REVIEW THE LOW VOC EPDM PRIMER MATERIAL SAFETY DATA SHEET FOR COMPLETE SAFETY INFORMATION PRIOR TO USE.

KEEP OUT OF REACH OF CHILDREN.

STORAGE & HANDLING

Job site storage temperatures in excess of 90ºF (32ºC) may affect product shelf life. Should the primer be stored at temperatures lower than 60ºF (15ºC), restore to room temperature prior to use.

Keep can tightly closed when not in use and protect from moisture contamination. Once exposed to moisture in the air, Low VOC EPDM Primer begins to cure and may gel within a few days. A gasket of membrane or sealant can be used to create a positive seal.

PROTECTION & SAFETY

Mule-Hide maintains Material Safety Data Sheets on all of its products. Material Safety Data Sheets contain health and safety information for your development of appropriate product handling procedures to protect your employees and customers. Mule-Hide's Material Safety Data Sheets should be read and understood by all of your supervisory personnel and employees before using Mule-Hide products in your facilities.

ADDITIONAL INFORMATION

The information given on this PDS is subject to change without notice. Always check the Mule-Hide website at www.mulehide.com for the latest information, changes and updates or contact Mule-Hide Products Company at 800-786-1492.

DISCLAIMER

The statements provided concerning the material shown are intended as a guide for material usage and are believed to be true and accurate at the time of printing. No statement made by anyone may supersede this information, except when done in writing by Mule-Hide Products Co., Inc. Since the manner of use is beyond our control, Mule-Hide does not authorize anyone to make any warranty of merchantability or fitness for any particular purpose or any other warranty, guarantee or representation, expressed or implied, concerning this material. This product may be eligible for a Mule-Hide warranty, please check the Mule-Hide website at www.mulehide.com or contact Mule-Hide directly at 800-786-1492 for details. Buyer and user accept the product under these conditions and assume the risk of any failure, any injury person or property (including that of the user), loss or liability resulting from the handling, storage or use of the product whether or not it is handled, stored or used in accordance with the directions or specifications. Mule-Hide must be notified in writing of any claims and be given the opportunity to inspect the alleged failure before repairs are made.

Mule-Hide Products Co., Inc.
1195 Prince Hall Dr.
Beloit, WI 53511

LOW VOC PRIMER

PRODUCT DESCRIPTION

Low VOC Primer is a solvent-based product designed for one-step cleaning and priming of EPDM and TPO surfaces to be bonded with In-Seam Tapes, Uncured Flashing Tapes, Cured Cover Tapes, and Pre-Taped membranes. It is a Low VOC product that is ideal for use where environmental concerns are an issue.

BASIC USES

A Low VOC product designed for one-step cleaning and priming of EPDM and TPO surfaces prior to the application of In-Seam Tapes and other Taped Products.

TYPICAL PHYSICAL PROPERTIES*

Base Material	Synthetic Rubber
Solids	9%
Flash Point	40ºF (4.4ºC)
VOC	Less than 250 grams/liter
Shelf Life	9 months
Average Weight	9.55 lbs./gallon (1.14 kg/liter)

*General properties. Typical properties and characteristics are based on samples tested and are not guaranteed for all samples of this product. This data and information is intended as a guide and does not reflect the specification or specification range for any particular property of this product.

COLORS

Olive Drab to Dark Gray

PACKAGING

(6) 1 gallon (3.8 liter) cans per carton

BENEFITS & SUPPLEMENTAL STATEMENTS

Promotes excellent adhesion with Tape Products
One step cleaner and primer
VOC less than 250 gpl

COVERAGE RATES

Approximately 250 square feet / gallon with Dusted Sheet

INSTALLATION TEMPERATURE

If primer is store at temperatures less than 60° F, restore to room temperature (~70° F) before using.

MIXING

Mixing is not recommended, even when settling has occurred. The Low-VOC Primer contains a non-partitioning agent that may settle to the bottom of the can. Do not attempt to break up or stir back into the primer.

LOW VOC PRIMER

INSTALLATION INSTRUCTIONS

Surface Preparation

1. Remove all foreign material by brooming or washing with water. If membrane is very dirty, scrubbing with Weathered Membrane Cleaner may be necessary. This process is essential on membrane that has been exposed for a number of weeks.

   Note: Permeation resistant gloves (that meet ANSI/ISEA 105-2005) are required for hand protection when cleaners or primers are being used.

Application

1. **Mixing is not recommended, even when settling has occurred.**
2. Apply the primer with Scotch-Brite® pads or clean rags. Scrub the area of the membrane (where the Pre-Taped Sheet, Taped Product or Splicing Cement is to be applied) in a circular motion to achieve a thin, even coating on the membrane. The properly cleaned/primed area will be uniform in color without streaks and free of globs or puddles.
3. Note: The use of excessive amounts of Low VOC Primer will not significantly enhance the adhesion of the Pre-Taped or Taped Product to the EPDM or TPO membrane. Use only the amount necessary to obtain 100% coverage of the area where the tape or adhesive will be applied.
4. Allow the Low VOC Primer to dry until it does not transfer to a dry finger touch. Prompt installation of the In-Seam Tape or Taped Product as soon as the primer flashes off minimizes potential dust contamination and promotes adhesion in colder weather.
5. Complete the splice as specified in Mule-Hide's Specifications and Details.

   ** REVIEW CURRENT MULE-HIDE SPECIFICATIONS AND DETAILS FOR SPECIFIC APPLICATION REQUIREMENTS.

Precautions

1. Do not allow primer to over dry or lose tack.
2. Install taped products immediately after primer flashes off and while primer is still tacky.
3. This product is FLAMMABLE. Precautions must be taken to keep the primer away from heat, flame and sparks during storage and use.
4. Avoid contact with eyes and skin.
5. Avoid breathing vapors. Keep container closed when not in use. Use with adequate ventilation. If inhaled, remove to fresh air. If not breathing, perform artificial respiration. If breathing is difficult, give oxygen. Call a physician immediately. During application, efforts must be made to prevent fumes from entering the building via air ventilation ducts. Do not place open containers or mix adhesive near fresh air intake units. When possible, shut down or seal off the closest units.
6. If swallowed, DO NOT INDUCE VOMITING. Call a physician immediately.
7. Chemically-resistant gloves must be worn with Low VOC Primer to protect hands from staining and irritating ingredients.
8. Solids suspended in Low VOC Primer tend to settle and **DO NOT NEED TO BE REMIXED**.. Stirring is not required. Use Low VOC Primer full strength. Do not thin. Thinning will affect performance.
7. Low VOC Primer is not white in color and may cause staining of White-on-Black membrane and other non-black surfaces. For appearance, care should be taken to limit the amount of primer exposed beyond the splice area.

LOW VOC PRIMER

Precautions – continued

8. Due to solvent flash-off, condensation may form on freshly applied Low VOC Primer when the ambient temperature is near the dew point. If condensation develops, the application of primer must be discontinued (proper adhesion will not be obtained). Allow the surface to dry and apply a thin freshener coat of primer to the previously coated surface when conditions allow.

REVIEW THE LOW VOC PRIMER MATERIAL SAFETY DATA SHEET FOR COMPLETE SAFETY INFORMATION PRIOR TO USE.

KEEP OUT OF REACH OF CHILDREN.

STORAGE & HANDLING

Job site storage temperatures in excess of 90ºF (32ºC) may affect product shelf life. Should the primer be stored at temperatures lower than 60ºF (15ºC), restore to room temperature prior to use.

Keep can tightly closed when not in use and protect from moisture contamination. Once exposed to moisture in the air, Low VOC Primer begins to cure and may gel within a few days. A gasket of membrane or sealant can be used to create a positive seal.

PROTECTION & SAFETY

Mule-Hide maintains Material Safety Data Sheets on all of its products. Material Safety Data Sheets contain health and safety information for your development of appropriate product handling procedures to protect your employees and customers. Mule-Hide's Material Safety Data Sheets should be read and understood by all of your supervisory personnel and employees before using Mule-Hide products in your facilities.

ADDITIONAL INFORMATION

The information given on this PDS is subject to change without notice. Always check the Mule-Hide website at www.mulehide.com for the latest information, changes and updates or contact Mule-Hide Products Company at 800-786-1492.

DISCLAIMER

The statements provided concerning the material shown are intended as a guide for material usage and are believed to be true and accurate at the time of printing. No statement made by anyone may supersede this information, except when done in writing by Mule-Hide Products Co., Inc. Since the manner of use is beyond our control, Mule-Hide does not authorize anyone to make any warranty of merchantability or fitness for any particular purpose or any other warranty, guarantee or representation, expressed or implied, concerning this material. This product may be eligible for a Mule-Hide warranty, please check the Mule-Hide website at www.mulehide.com or contact Mule-Hide directly at 800-786-1492 for details. Buyer and user accept the product under these conditions and assume the risk of any failure, any injury person or property (including that of the user), loss or liability resulting from the handling, storage or use of the product whether or not it is handled, stored or used in accordance with the directions or specifications. Mule-Hide must be notified in writing of any claims and be given the opportunity to inspect the alleged failure before repairs are made.

Mule-Hide Products Co., Inc.
1195 Prince Hall Dr.
Beloit, WI 53511

PRODUCT DATA SHEET
PDS 09-3305
Revision Date: Feb-2014

MULE-HIDE BLACK SPLICE ADHESIVE

PRODUCT DESCRIPTION

Mule-Hide Black Splice Adhesive is a black, butyl rubber based product designed for splicing EPDM membranes and uncured EPDM flashings. This product has been formulated to provide fast drying, long open time and high peel strength. When cured, Mule-Hide Splice Adhesive offers good resistance to heat, cold water and moisture. Mule-Hide Splice Adhesive can be easily brushed or roller applied at high or low temperatures.

BASIC USES

Mule-Hide Black Splice Adhesive may be used on EPDM membranes for splicing field sheets. This product may also be used to splice Uncured EPDM Flashing material to cured EPDM membranes. Use Mule-Hide White Splice Adhesive when a white (white-on-black) membrane is required. Either Mule-Hide Seam Cleaner or Mule-Hide Tape Primer must be used to prepare the membrane prior to the application of the adhesive.

TYPICAL PHYSICAL PROPERTIES

Typical Properties and Characteristics	
Base Polymer	Synthetic Rubber
Color	Black
Solids	30%
Average Brookfield Viscosity	3800 Centipoise
Average Net Weight	7.4 lbs./gal. (0.89 Kg/l)
Packaging	6 x 1 gallon cans per carton
Flash Point	8°F (-13°F) Closed Cup
Shelf Life	12 months
Typical properties and characteristics are based on samples tested and are not guaranteed for all samples of this product. This data and information is intended as a guide and does not reflect the specification or specification range for any particular property of this product.	

LEED Information	
Pre-Consumer Recycled Content	0%
Post-Consumer Recycled Content	0%
VOC Content	605 g/l
Manufacturing Location	Carlisle, PA

BENEFITS & SUPPLEMENTAL STATEMENTS

- Provides a high performance seam for EPDM membranes and flashings
- High-strength, solvent-based contact adhesive
- Limited to 10-year warranties

COVERAGE RATES

Estimated Coverage Rates	
Splice Width	Coverage (Linear Ft/Gal)
3"	150 ft.
4"	120 ft.
6"	100 ft.
Approximately 5 mils dry thickness each side. Coverage rate equates to 50 square feet of finished seam per gallon on average and may vary due to jobsite conditions.	

MULE-HIDE BLACK SPLICE ADHESIVE

INSTALLATION INSTRUCTIONS

1. Stir Black Splice Adhesive for five minutes, thoroughly scraping the sides and bottom of the can until a solid, uniform consistency is achieved. No heavier material should be remaining on the bottom or sides of the can. Some lots may contain more thick material on the bottom than other lots. Stirring for five minutes will make the cement smooth and homogenous.
2. Clean the dry mating surfaces by scrubbing with a clean rag saturated with Weathered Membrane Cleaner to achieve a solid surface color with no dust streaking. Caution: Permeation-resistant gloves (that meet ANSI/ISEA 105-2005) are required.
3. Apply Black Splice Adhesive (stirred for 5 minutes) with a ½" (13 mm) medium nap roller to achieve a heavy, smooth and consistent 100% coat without puddles. A small, long-bristle, ½" (13 mm) paint brush must be used in corners and angle changes.
4. Check the dryness of the cement before assembly. The Black Splice Adhesive should be tacky but should not move when pushed with a dry finger (tack and push test). Avoid over-drying! If cement over-dries and is not tacky, recoat with Black Splice Adhesive.
5. Break the membrane edge free and roll (do not flop) the top sheet onto the mating surface. Use care not to stretch or wrinkle the membrane.
6. Use hand pressure to assemble the splice by wiping toward the splice edge.
7. Roll the seam toward the splice edge with a 2" (50 mm) hand roller.
8. Apply Lap Sealant per current specifications and details
   REVIEW CURRENT MULE-HIDE SPECIFICATIONS AND DETAILS FOR SPECIFIC APPLICATION REQUIREMENTS.

PRECAUTIONS

1. Review the applicable Material Safety Data Sheet for complete safety information prior to use.
2. Black Splice Adhesives are EXTREMELY FLAMMABLE. They contain petroleum distillates that are dangerous fire and explosion hazards when exposed to heat, flame or sparks. Store and use away from all sources of heat, flame or sparks. Do not smoke while applying. Do not use in a confined or unventilated area. Vapors are heavier than air and may travel along ground to a distant ignition source and flash back. A red caution label is required when shipping.
3. During application, efforts must be made to prevent fumes from entering the building via air ventilation ducts. Do not place open containers or mix adhesive near fresh-air intake units. When possible, shut down or seal off the closest units. Avoid breathing vapors. Keep container closed when not in use. Use with adequate ventilation. If inhaled, remove to fresh air. If not breathing, perform artificial respiration. If breathing is difficult, give oxygen. Call a physician immediately.
4. If swallowed, DO NOT INDUCE VOMITING. Call a physician immediately.
5. Avoid contact with eyes. Safety glasses or goggles are recommended. If splashed in eyes, immediately flush eyes with plenty of water for at least 15 minutes. Contact a physician immediately.
6. Avoid contact with skin. Wash hands thoroughly after handling. In case of contact with skin, thoroughly wash affected area with soap and water.
   Note: Permeation-resistant gloves (that meet ANSI/ISEA 105-2005) are recommended to be worn when using this product to protect hands from irritating ingredients.
7. Do not thin Black Splice Adhesives. Thinning will affect performance.
8. Jobsite storage temperatures in excess of 90°F (32°C) may affect product shelf life. This will eventually thicken the cement and cause the product to become difficult or even impossible to use. When storage temperatures become elevated, Black Splice Adhesives should be stored in a controlled environment. Should Black Splice Adhesive be stored at temperatures below 60ºF (15°C), restore to room temperature prior to use. Stir cement occasionally while using.
9. Opened containers of Black Splice Adhesive should be used within 48 hours. Cement will begin to thicken after this time, making it difficult and eventually impossible to control adhesive thickness.
10. KEEP OUT OF THE REACH OF CHILDREN.

MULE-HIDE BLACK SPLICE ADHESIVE

PROTECTION & SAFETY

Mule-Hide maintains Material Safety Data Sheets on all of its products. Material Safety Data Sheets contain health and safety information for your development of appropriate product handling procedures to protect your employees and customers. Mule-Hide's Material Safety Data Sheets should be read and understood by all of your supervisory personnel and employees before using Mule-Hide products in your facilities.

ADDITIONAL INFORMATION

The information given on this PDS is subject to change without notice. Always check the Mule-Hide website at www.mulehide.com for the latest information, changes and updates or contact Mule-Hide Products Company at 800-786-1492.

DISCLAIMER

The statements provided concerning the material shown are intended as a guide for material usage and are believed to be true and accurate at the time of printing. No statement made by anyone may supersede this information, except when done in writing by Mule-Hide Products Co., Inc. Since the manner of use is beyond our control, Mule-Hide does not authorize anyone to make any warranty of merchantability or fitness for any particular purpose or any other warranty, guarantee or representation, expressed or implied, concerning this material. This product may be eligible for a Mule-Hide warranty, please check the Mule-Hide website at www.mulehide.com or contact Mule-Hide directly at 800-786-1492 for details. Buyer and user accept the product under these conditions and assume the risk of any failure, any injury person or property (including that of the user), loss or liability resulting from the handling, storage or use of the product whether or not it is handled, stored or used in accordance with the directions or specifications. Mule-Hide must be notified in writing of any claims and be given the opportunity to inspect the alleged failure before repairs are made.

Mule-Hide Products Co., Inc.
1195 Prince Hall Dr.
Beloit, WI 53511

MULE-HIDE WHITE SPLICE ADHESIVE

PRODUCT DESCRIPTION

Mule-Hide White Splice Adhesive is a white butyl rubber based product designed for splicing Mule-Hide White-on-Black EPDM membranes and uncured EPDM flashings. This product has been formulated to provide fast drying, long open time and high peel strength. When cured, Mule-Hide White Splice Adhesive offers good resistance to heat, cold water and moisture. Mule-Hide White Splice Adhesive can be easily brushed or roller applied at high or low temperatures.

BASIC USES

Mule-Hide White Splice Adhesive may be used on EPDM membranes for splicing field sheets. This product may also be used to splice Uncured EPDM Flashing material to cured EPDM membranes. Use Mule-Hide White Splice Adhesive when a white (white-on-black) membrane is required. Either Mule-Hide Seam Cleaner (Clear) or Mule-Hide Tape Primer must be used to prepare the membrane prior to the application of the adhesive.

TYPICAL PHYSICAL PROPERTIES

Typical Properties and Characteristics	
Base Polymer	Synthetic Rubber
Color	White
Solids	28%
Average Brookfield Viscosity	3500 Centipoise
Average Net Weight	7.5 lbs./gal. (0.90 Kg/l)
Packaging	6 x 1 gallon cans per carton
Flash Point	8°F (-13°F) Closed Cup
Shelf Life	9 months
Typical properties and characteristics are based on samples tested and are not guaranteed for all samples of this product. This data and information is intended as a guide and does not reflect the specification or specification range for any particular property of this product.	

LEED Information	
Pre-Consumer Recycled Content	0%
Post-Consumer Recycled Content	0%
VOC Content	637 g/l
Manufacturing Location	Carlisle, PA

BENEFITS & SUPPLEMENTAL STATEMENTS

- Provides a high performance seam for EPDM membranes and flashings
- High-strength, solvent-based contact adhesive
- Limited to 10-year warranties

COVERAGE RATES

Estimated Coverage Rates	
Splice Width	Coverage (Linear Ft/Gal)
3"	150 ft.
4"	120 ft.
6"	100 ft.
Approximately 5 mils dry thickness each side. Coverage rate equates to 50 square feet of finished seam per gallon on average and may vary due to jobsite conditions.	

MULE-HIDE WHITE SPLICE ADHESIVE

INSTALLATION INSTRUCTIONS

1. Stir White Splice Adhesive for five minutes, thoroughly scraping the sides and bottom of the can until a solid, uniform consistency is achieved. No heavier material should be remaining on the bottom or sides of the can. Some lots may contain more thick material on the bottom than other lots. Stirring for five minutes will make the cement smooth and homogenous.
2. Clean the dry mating surfaces by scrubbing with a clean rag saturated with Weathered Membrane Cleaner to achieve a solid surface color with no dust streaking. Caution: Permeation-resistant gloves (that meet ANSI/ISEA 105-2005) are required.
3. Apply White Splice Adhesive (stirred for 5 minutes) with a ½" (13 mm) medium nap roller to achieve a heavy, smooth and consistent 100% coat without puddles. A small, long-bristle, ½" (13 mm) paint brush must be used in corners and angle changes.
4. Check the dryness of the cement before assembly. The White Splice Adhesive should be tacky but should not move when pushed with a dry finger (tack and push test). Avoid over-drying! If cement over-dries and is not tacky, recoat with White Splice Adhesive.
5. Break the membrane edge free and roll (do not flop) the top sheet onto the mating surface. Use care not to stretch or wrinkle the membrane.
6. Use hand pressure to assemble the splice by wiping toward the splice edge.
7. Roll the seam toward the splice edge with a 2" (50 mm) hand roller.
8. Apply Lap Sealant per current specifications and details
   REVIEW CURRENT MULE-HIDE SPECIFICATIONS AND DETAILS FOR SPECIFIC APPLICATION REQUIREMENTS.

PRECAUTIONS

1. Review the applicable Material Safety Data Sheet for complete safety information prior to use.
2. White Splice Adhesives are EXTREMELY FLAMMABLE. They contain petroleum distillates that are dangerous fire and explosion hazards when exposed to heat, flame or sparks. Store and use away from all sources of heat, flame or sparks. Do not smoke while applying. Do not use in a confined or unventilated area. Vapors are heavier than air and may travel along ground to a distant ignition source and flash back. A red caution label is required when shipping.
3. During application, efforts must be made to prevent fumes from entering the building via air ventilation ducts. Do not place open containers or mix adhesive near fresh-air intake units. When possible, shut down or seal off the closest units. Avoid breathing vapors. Keep container closed when not in use. Use with adequate ventilation. If inhaled, remove to fresh air. If not breathing, perform artificial respiration. If breathing is difficult, give oxygen. Call a physician immediately.
4. If swallowed, DO NOT INDUCE VOMITING. Call a physician immediately.
5. Avoid contact with eyes. Safety glasses or goggles are recommended. If splashed in eyes, immediately flush eyes with plenty of water for at least 15 minutes. Contact a physician immediately.
6. Avoid contact with skin. Wash hands thoroughly after handling. In case of contact with skin, thoroughly wash affected area with soap and water.
   Note: Permeation-resistant gloves (that meet ANSI/ISEA 105-2005) are recommended to be worn when using this product to protect hands from irritating ingredients.
7. Do not thin White Splice Adhesives. Thinning will affect performance.
8. Jobsite storage temperatures in excess of 90°F (32°C) may affect product shelf life. This will eventually thicken the cement and cause the product to become difficult or even impossible to use. When storage temperatures become elevated, White Splice Adhesives should be stored in a controlled environment. Should White Splice Adhesive be stored at temperatures below 60ºF (15°C), restore to room temperature prior to use. Stir cement occasionally while using.
9. Opened containers of White Splice Adhesive should be used within 48 hours. Cement will begin to thicken after this time, making it difficult and eventually impossible to control adhesive thickness.
10. KEEP OUT OF THE REACH OF CHILDREN.

MULE-HIDE WHITE SPLICE ADHESIVE

PROTECTION & SAFETY

Mule-Hide maintains Material Safety Data Sheets on all of its products. Material Safety Data Sheets contain health and safety information for your development of appropriate product handling procedures to protect your employees and customers. Mule-Hide's Material Safety Data Sheets should be read and understood by all of your supervisory personnel and employees before using Mule-Hide products in your facilities.

ADDITIONAL INFORMATION

The information given on this PDS is subject to change without notice. Always check the Mule-Hide website at www.mulehide.com for the latest information, changes and updates or contact Mule-Hide Products Company at 800-786-1492.

DISCLAIMER

The statements provided concerning the material shown are intended as a guide for material usage and are believed to be true and accurate at the time of printing. No statement made by anyone may supersede this information, except when done in writing by Mule-Hide Products Co., Inc. Since the manner of use is beyond our control, Mule-Hide does not authorize anyone to make any warranty of merchantability or fitness for any particular purpose or any other warranty, guarantee or representation, expressed or implied, concerning this material. This product may be eligible for a Mule-Hide warranty, please check the Mule-Hide website at www.mulehide.com or contact Mule-Hide directly at 800-786-1492 for details. Buyer and user accept the product under these conditions and assume the risk of any failure, any injury person or property (including that of the user), loss or liability resulting from the handling, storage or use of the product whether or not it is handled, stored or used in accordance with the directions or specifications. Mule-Hide must be notified in writing of any claims and be given the opportunity to inspect the alleged failure before repairs are made.

MULE-HIDE EPDM IN-SEAM TAPE

PRODUCT DESCRIPTION

Mule-Hide In-Seam Tape is a black/white, butyl rubber-based adhesive in tape form. The product has been formulated to provide high green strength in both shear and peel. Mule-Hide's In-Seam Tape has a clear, durable poly release film.

BASIC USES

Mule-Hide In-Seam Tape was specifically developed for splicing sheets of EPDM membrane together. The In-Seam Tape may be used on Ballasted, Mechanically Attached and Fully Adhered EPDM Roofing Systems.

PRODUCT BENEFITS

- Contains no solvent
- Labor savings up to 50%
- Superior tack and green strength
- Superior peel and shear strengths
- Ease of installation
- Reduces application problems of adhesives
- Strength improves with age

SPECIFICATIONS

Base Polymer	Butyl
Color	Black/White
Cure State	Cured
Tensile Strength	75 psi (55 psi min.)
Elongation	1000% (800% min.)
Brittleness Temperature	Below -50°F
Permeability	0.6 perm-mils
Heat Aging at 300°F	No appearance change after 180 hours

Typical Values: Based on material tested in our laboratories but variable from sample to sample. Typical values should not be construed as a guaranteed analysis of any specific lot or as specification items.

Sizes

Thickness	Width	Length	Unit
.035"+/-.005"(black)	3"	100 lf.	4/case
.035"+/-.005"(white)			
or	3"	25 lf.	12/case
.035"+/-.005"(black)	6"	100 lf.	2/case

Typical Performance

	Test Temperature, °F		
	15°	70°	158°
Peel, pli	12 - 16	8 - 10	6 - 8
Shear, psi	45 - 55	35 - 45	22 - 27

MULE-HIDE PRODUCTS CO., INC.

P.O. Box 1057, Beloit, WI 53512-1057 • 608/365-3111 • Fax: 608/365-7852 • www.mulehide.com

MULE-HIDE EPDM IN-SEAM TAPE

PACKAGING AND STORAGE

Mule-Hide In-Seam tape is a cured product and will not degrade in normal warehouse storage. However, in time the release paper may become difficult to remove. For this reason Mule-Hide recommends the shelf life not exceed 12 months. Stock should be rotated.

INSTALLATION INSTRUCTIONS

After the EPDM membrane sheets have been positioned, fold back the top sheet approximately 12". Using Scotch-Brite® scrub pads or clean rags, clean the seam area thoroughly with Mule-Hide's Tape Primer. Unroll the seam tape onto the seaming area on the bottom sheet, leaving the release paper on. Using firm hand pressure, smooth the tape into place along the length of the seam. Remove the release liner by pulling at a 90 angle. The tape should be positioned so that the tape protrudes from the seam 1/8" to 3/8". As the release liner is being removed, roll the top sheet onto the seam and apply firm hand pressure, then use a 2" steel hand roller and roll the seam starting from the inside of the sheet working outward over the edge of the sheet perpendicular to the direction of the seam. Lap Sealant is required along the seam where the tape is overlapped in the seam (approximately 1.5" in each direction past the overlap).

In warm, sunny weather, the tapes should be stored in the boxes in a shaded area until just prior to use. Prolonged storage temperatures in excess of 90 ^{o} F(32 ^{o} C) may affect the product's shelf life. Storage and use of tapes at temperatures below 40 ^{o} F(4 ^{o} C) will result in loss of tape tack, and may in extreme cases, result in a loss of bond to the EPDM material. Tapes should be maintained at a minimum temperature of 60 ^{o} F(15 ^{o} C) until just prior to installation. Hot boxes may be required for job site storage.

PRECAUTIONS

Mule-Hide In-Seam Tape contains ingredients that could be harmful if mishandled. Contact with skin and eyes should be avoided and necessary protective equipment and clothing should be worn.

Mule-Hide maintains Material Safety Data Sheets on all of its products. Material Safety Data Sheets contain health and safety information for your development of appropriate product handling procedures to protect your employees and customers. Mule-Hide's Material Safety Data Sheets should be read and understood by all of your supervisory personnel and employees before using Mule-Hide products in your facilities.

TECHNICAL SERVICES

Contact Mule-Hide Products Co., Inc. at 608/365-3111 for additional information.

DISCLAIMER

The statements provided concerning the material shown are intended as a guide for material usage and are believed to be true and accurate. No statement made by anyone may supersede this information, except when done in writing by Mule-Hide Products Co., Inc. Since the manner of use is beyond our control, Mule-Hide does not make nor does it authorize anyone to make any warranty of merchantability or fitness for any particular purpose or any other warranty, guarantee or representation, expressed or implied, concerning this material except that it conforms to Mule-Hide's physical properties. Buyer and user accept the product under these conditions and assume the risk of any failure, any injury of person or property (including that of the user), loss or liability resulting from the handling, storage or use of the product whether or not it is handled, stored or used in accordance with the directions or specifications. Mule-Hide must be notified in writing of any claims and be given the opportunity to inspect the complaint or failure before repairs are made.

MULE-HIDE PRODUCTS CO., INC.

P.O. Box 1057, Beloit, WI 53512-1057 • 608/365-3111 • Fax: 608/365-7852 • www.mulehide.com

Mule-Hide Products Co., Inc.
1195 Prince Hall Dr.
Beloit, WI 53511

MULE-HIDE EPDM IN-SEAM TAPE

PRODUCT DESCRIPTION

Mule-Hide In-Seam Tape is a black or white, butyl rubber-based adhesive in tape form. The product has been formulated to provide high green strength in both shear and peel. Mule-Hide's In-Seam Tape has a clear, durable poly release film for ease of use.

BASIC USES

Mule-Hide In-Seam Tape was specifically developed for splicing sheets of EPDM membrane together. The In-Seam Tape may be used on Ballasted, Mechanically Attached and Fully Adhered EPDM Roofing Systems.

TYPICAL PHYSICAL PROPERTIES

Typical Properties and Characteristics	
Color	Black or White
Base	Synthetic Rubber
Roll Size	100' (30 m) long
Thickness	.030" (0.75mm)
Packaging – 3"	4 rolls / carton – 26 lbs (12 Kg)
Packaging – 6"	2 rolls / carton – 26 lbs (12 Kg)
Typical properties and characteristics are based on samples tested and are not guaranteed for all samples of this product. This data and information is intended as a guide and does not reflect the specification or specification range for any particular property of this product.	

LEED Information

LEED Information	
Pre-consumer Recycled Content	4%
Post-consumer Recycled Content	0%
Manufacturing Location	Greenville, IL
Solar Reflectance Index (SRI)	N/A

BENEFITS & SUPPLEMENTAL STATEMENTS

- Available in 3" or 6" widths x 100 foot long rolls
- Available in Black or White
- Excellent long-term strength
- Manufactured with a clear poly film
- Greater peel and shear strength

INSTALLATION INSTRUCTIONS

1. Overlap the EPDM membranes the appropriate amount. For 3" (75 mm) In-Seam Tape, overlap the membranes 4" (100 mm). For 6" (150 mm) In-Seam Tape, overlap the membranes 7" (175 mm).
2. The entire surface where the In-Seam Tape will be applied must be clean. The In-Seam Tape will not adhere to dusted or dirty surfaces. Any residual contamination will be detrimental to the bond strength of the adhesive.

MULE-HIDE EPDM IN-SEAM TAPE

INSTALLATION INSTRUCTIONS (Continued)

3. If membrane is very dirty, scrubbing with Weathered Membrane Cleaner may be necessary. This process is essential on membrane that has been exposed for a number of weeks. Allow membrane to dry thoroughly before proceeding.
   Note: Permeation resistant gloves (that meet ANSI/ISEA 105-2005) are required for hand protection when cleaners or primers are being used.
4. Mark the bottom sheet with a crayon approximately ¼" (6 mm) at the edge of the top sheet along the entire splice length as a guide to install the In-Seam Tape.
5. Apply tape primer with Scotch-Brite® pads or clean rags. Scrub the area of the membrane where the In-Seam Tape is to be applied, in a circular motion to achieve a thin, even coating on the membrane. The properly cleaned/primed area will be uniform in color without streaks and free of globs or puddles.
   Note: The use of excessive amounts of Low VOC EPDM Primer will not significantly enhance the adhesion of the Pre-Taped or Taped Product to the EPDM or TPO membrane. Use only the amount necessary to obtain 100% coverage of the area where the tape or adhesive will be applied.
6. Allow the Low VOC EPDM Primer to dry until it does not transfer to a dry finger touch. Prompt installation of the In-Seam Tape or Taped Product as soon as the primer flashes off minimizes potential dust contamination and promotes adhesion in colder weather.
7. Unroll approximately 3' (1 m) of In-Seam Tape. Align the tape with a marked line and press tape down to bottom sheet using firm, even hand pressure. Continue for the length of the splice. Tape roll ends should be overlapped 1" (25 mm). Allow top sheet to rest on poly backing after application. A minimum of ⅛" (3 mm) to a maximum of ½" (12 mm) of tape must extend beyond the splice edge. A continuous piece of In-Seam Tape must be used at all field and factory splice intersections.
8. Roll the In-Seam Tape with a 2"-wide hand roller after application to the primed substrate. This will significantly reduce the frequency of air blisters in the completed field seam.
9. Pull the poly backing from the In-Seam Tape beneath the top sheet and allow the top sheet to fall freely onto the exposed tape.
10. Press top sheet onto tape using firm, even hand pressure across the splice towards the splice edge.
11. Immediately roll the splice with a 2"-wide roller using positive pressure. Roll across the splice edge, not parallel to it.
12. The use of Lap Sealant with In-Seam Tape seams is optional except at cut edges of reinforced membrane (exposed scrim reinforcement and tape overlaps), where Lap Sealant must be utilized. Lap Sealant may be applied immediately following the completion of an In-Seam Tape splice for added protection. See Lap Sealant PDS or appropriate detail for more information.
13. Use of In-Seam Tape at temperatures below 40ºF will result in reduced adhesion.
    Review Mule-Hide Specifications and details for complete installation information.

PRECAUTIONS

- Avoid prolonged contact with skin. In case of contact with skin, thoroughly wash affected area with soap and water.
- Prolonged jobsite storage temperatures in excess of 90°F (32°C) will shorten product shelf life.
- In warm, sunny weather, keep In-Seam Tape rolls in original box in a shaded area until ready to use.
- Storage and use of In-Seam Tape at temperatures below 40°F (4°C) will result in a loss of tape tack and, in extreme cases, will result in no bond to the substrate. Overnight storage must be available to keep the temperature of the In-Seam Tape at a minimum of 60°F (15°C). Hot boxes for jobsite storage must be provided to maintain a minimum tape temperature of 40°F (4°C).
- In-Seam Tape must be stored in a dry area.
- Due to solvent flash-off, condensation may occur on freshly applied primer when the ambient temperature is near the dew point. If condensation develops, the application of primer and In-Seam Tape must be discontinued as proper adhesion will not be achieved.

MULE-HIDE EPDM IN-SEAM TAPE

PRECAUTIONS (Continued)

- Allow the primer surface to dry and apply a thin freshener coat of primer to the previously coated surface and apply In-Seam Tape when conditions allow.
- KEEP OUT OF REACH OF CHILDREN

PROTECTION & SAFETY

Mule-Hide maintains Material Safety Data Sheets on all of its products. Material Safety Data Sheets contain health and safety information for your development of appropriate product handling procedures to protect your employees and customers. Mule-Hide's Material Safety Data Sheets should be read and understood by all of your supervisory personnel and employees before using Mule-Hide products in your facilities.

ADDITIONAL INFORMATION

The information given on this PDS is subject to change without notice. Always check the Mule-Hide website at www.mulehide.com for the latest information, changes and updates or contact Mule-Hide Products Company at 800-786-1492.

DISCLAIMER

The statements provided concerning the material shown are intended as a guide for material usage and are believed to be true and accurate at the time of printing. No statement made by anyone may supersede this information, except when done in writing by Mule-Hide Products Co., Inc. Since the manner of use is beyond our control, Mule-Hide does not authorize anyone to make any warranty of merchantability or fitness for any particular purpose or any other warranty, guarantee or representation, expressed or implied, concerning this material. This product may be eligible for a Mule-Hide warranty, please check the Mule-Hide website at www.mulehide.com or contact Mule-Hide directly at 800-786-1492 for details. Buyer and user accept the product under these conditions and assume the risk of any failure, any injury person or property (including that of the user), loss or liability resulting from the handling, storage or use of the product whether or not it is handled, stored or used in accordance with the directions or specifications. Mule-Hide must be notified in writing of any claims and be given the opportunity to inspect the alleged failure before repairs are made.

Mule-Hide Products Co., Inc.
1195 Prince Hall Dr.
Beloit, WI 53511

MULE-HIDE EPDM BLACK LAP SEALANT

PRODUCT DESCRIPTION

Mule-Hide EPDM Lap Sealant is a one-part, black, elastomeric sealant designed for sealing the exposed edge of field fabricated rubber membrane splices and laps.

BASIC USES

Mule-Hide EPDM Lap Sealant is required for sealing EPDM seams and flashings against the effects of weathering when seam with Splice Adhesive or Single Seal Adhesive. Refer to the Mule-Hide EPDM Manual for appropriate use of Lap Sealant when seams and flashings are completed with Mule-Hide Tape Products.

TYPICAL PHYSICAL PROPERTIES

Typical Properties and Characteristics	
Color	Black
Solids	63%
Flash Point	40ºF (4ºC) Tag Open Cup
Service Temp	-60ºF to 180ºF (-51ºC to 82º C)
Specific Gravity	1.03
Cold Weather Flex	Excellent
Resistance to Staining	Excellent
Resistance to General Weathering	Excellent
Ozone Resistance	Excellent
Resistance to Ultraviolet Radiation	Excellent
Resistance to Slump	Very Good
Resistance to Water	Excellent
Resistance to Acid	Good
Resistance to Alkali	Good
VOC	365 g/l
Average Net Weight/gallon	8.58 lbs (1.03 Kg/l)
Packaging	25 tubes per carton, 5-gallon pails
Shelf Life	1 year
Typical properties and characteristics are based on samples tested and are not guaranteed for all samples of this product. This data and information is intended as a guide and does not reflect the specification or specification range for any particular property of this product.	

BENEFITS & SUPPLEMENTAL STATEMENTS

- Can be applied by a variety of application methods – trowel, caulk gun, etc.
- Has consistency of cured rubber
- Expands and contracts with EPDM membrane
- Seals exposed edges of EPDM membrane and provides a durable barrier to weather extremes

COVERAGE RATES

22’ (6.7 m) per tube or 256’ (78 m) per gallon using a 5/16” (8 mm) diameter bead.
Yield may vary due to job conditions.

MULE-HIDE EPDM BLACK LAP SEALANT

INSTALLATION INSTRUCTIONS

1. All surfaces to be sealed with Black Lap Sealant must be firm, dry and free of oil, talc dust and other foreign materials.
2. After seams are completed with the proper splicing materials, clean the rubber to remove all foreign materials by wiping with a clean rag dampened with Weathered Membrane Cleaner. Note: Permeation resistant gloves (that meet ANSI/ISEA 105-2005) are recommended while using cleaner
3. Apply a 5/16˝ (8 mm) bead of Black Lap Sealant along the exposed edge of the membrane.
4. Using the feathering tool supplied with the sealant, feather the sealant bead so the high point is above the offset of the splice and the edges are feathered onto the deck.
5. Black Lap Sealant must be applied and feathered on all splice edges by the end of the working day. [Adhesive membrane splices must be allowed to age at least two hours before Black Lap Sealant is applied. In-Seam Tape splices between cured membrane and Un-Cured Flashing may be sealed immediately.]
   REVIEW CURRENT MULE-HIDE SPECIFICATIONS AND DETAILS FOR SPECIFIC APPLICATION REQUIREMENTS.

PRECAUTIONS

1. Review the applicable Material Safety Data Sheet for complete safety information prior to use.
2. Black Lap Sealants are FLAMMABLE. They contain petroleum distillates that are dangerous fi re and explosion hazards when exposed to heat, flame or sparks. Store and use away from all sources of heat, flame or sparks. Do not smoke while applying. Do not use in confined or unventilated area. Vapors are heavier than air and may travel along ground to a distant ignition source and fl ash back. A red caution label is required when shipping.
3. Avoid breathing vapors. Keep container closed when not in use. Use with adequate ventilation. If inhaled, remove to fresh air. If not breathing, perform artificial respiration. If breathing is difficult, give oxygen. Call a physician immediately.
4. If swallowed, DO NOT INDUCE VOMITING. Call a physician immediately.
5. Avoid contact with eyes. Safety glasses or goggles are recommended. If contact with eyes occurs, immediately flush eyes with plenty of water for at least 15 minutes. Contact a physician immediately.
6. Avoid contact with skin. Wash hands thoroughly after handling. In case of contact with skin, thoroughly wash affected area with soap and water.
   Note: Permeation-resistant gloves (that meet ANSI/ISEA 105- 2005) are to be worn when using this product to protect hands from irritating ingredients.
7. Follow Carlisle's recommended splice instructions. DO NOT USE as splice cement between membranes.
8. Jobsite storage temperatures in excess of 90ºF (32ºC) may affect product shelf life. Should the Lap Sealant be stored at temperatures below 60ºF (15ºC), restore to room temperature prior to use.
9. By using an excessively wet solvent cloth while cleaning the splice edge, solvent may be left in the offset of the membrane sheets. To avoid causing this problem, use a damp rag and make sure the Weathered Membrane Cleaner is completely flashed off the area before Lap Sealant application.
10. If applied during periods of cold, dampness or high humidity, it is possible that evaporation of solvents will be substantially reduced, resulting in some slight membrane swelling. This would be further aggravated should the sealant be applied in an unusually heavy coat.
11. Coverage rates are average and may vary due to conditions on the jobsite.
12. KEEP OUT OF THE REACH OF CHILDREN.

PROTECTION & SAFETY

Mule-Hide maintains Material Safety Data Sheets on all of its products. Material Safety Data Sheets contain health and safety information for your development of appropriate product handling procedures to protect your employees and customers. Mule-Hide's Material Safety Data Sheets should be read and understood by all of your supervisory personnel and employees before using Mule-Hide products in your facilities.

MULE-HIDE EPDM BLACK LAP SEALANT

ADDITIONAL INFORMATION

The information given on this PDS is subject to change without notice. Always check the Mule-Hide website at www.mulehide.com for the latest information, changes and updates or contact Mule-Hide Products Company at 800-786-1492.

DISCLAIMER

The statements provided concerning the material shown are intended as a guide for material usage and are believed to be true and accurate at the time of printing. No statement made by anyone may supersede this information, except when done in writing by Mule-Hide Products Co., Inc. Since the manner of use is beyond our control, Mule-Hide does not authorize anyone to make any warranty of merchantability or fitness for any particular purpose or any other warranty, guarantee or representation, expressed or implied, concerning this material. This product may be eligible for a Mule-Hide warranty, please check the Mule-Hide website at www.mulehide.com or contact Mule-Hide directly at 800-786-1492 for details. Buyer and user accept the product under these conditions and assume the risk of any failure, any injury person or property (including that of the user), loss or liability resulting from the handling, storage or use of the product whether or not it is handled, stored or used in accordance with the directions or specifications. Mule-Hide must be notified in writing of any claims and be given the opportunity to inspect the alleged failure before repairs are made.

Mule-Hide Products Co., Inc.
1195 Prince Hall Dr.
Beloit, WI 53511

PRODUCT DATA SHEET
PDS 09-4130
Revision Date: April 2011

MULE-HIDE CURED COVER TAPE

PRODUCT DESCRIPTION

Mule-Hide Cured Cover Tape is a nominal 60-mil, cured EPDM membrane strip laminated to nominal 30-mil cured butyl rubber tape and rolled onto a release liner, for a total nominal thickness of 90-mil.

BASIC USES

Mule-Hide Cured Cover Tape was specifically developed for use with EPDM single-ply membrane roofing systems. Mule-Hide's Cured Cover Tapes may be used in conjunction with the Mule-Hide Tape Primer to strip gravel stops, drip aprons, seams or batten bars, and can be used to make repairs to cut membrane.

SPECIFICATIONS

Typical Physical Properties* (Mule-Hide BUTYL Tape)

Base	
Membrane	EPDM
Adhesive	Synthetic Rubber
Color	Black
Solids	100%
Tensile Strength	1650 psi (11.3Mpa) minimum
Elongation	480% minimum
Brittleness Temperature	Below -67°F (-55 ^{o}C)
Tear Resistance	150 lbs/in (35 nK/m)
Ozone Resistance	No Cracks
Condition after exposure to 100 pphm Ozone in air for 168 hrs @ 104°F (40°C) (Specimen under 50% strain)	
Nominal Thickness	90-mil (2.29 mm)
Nominal Width	Membrane - Adhesive 6” (150 mm) – 6 3/16” (155 mm) 9” (230 mm) – 9 3/16” (235 mm) 12” (305 mm) – 12 3/16” (310 mm)

PACKAGING

Roll Size	Net weight per roll	Packaging
6” x 100 feet	30 lbs (14 kg)	2 rolls per carton
9” x 100 feet	45 lbs (21 kg)	1 roll per carton
12” x 50 feet	30 lbs (14 kg)	1 roll per carton

BENEFITS & SUPPLEMENTAL STATEMENTS

- Contains no solvent
- Labor savings up to 50%
- Superior tack and green strength
- Superior peel and shear strengths
- Ease of installation
- Reduces application problems of adhesives
- Strength improves with age

INSTALLATION INSTRUCTIONS

1. Using Scotch-Brite® scrub pads or clean rags, clean the area of the membrane to receive the tape thoroughly with Mule-Hide Tape Primer and allow to dry.
2. Roll out the cover tape and center over the area to be covered.

MULE-HIDE CURED COVER TAPE

INSTALLATION INSTRUCTIONS (Continued)

3. Starting at one end, peel back the release liner approximately 12". Carefully position the tape, center first.
4. Working with two people, lift the cover tape and peel back the release liner approximately 10' at a time without stretching the tape. The second person should smooth the cover tape over the area to be covered.
5. Then, using a 2" steel roller, roll the cover tape running the roller perpendicular to the length of the tape.
6. Lap sealant is only required at the cut ends of the tape and overlaps.

STORAGE & HANDLING

Mule-Hide Cured Cover Tape is a cured product and will not degrade in normal warehouse storage. However, in time the release paper may become difficult to remove. For this reason Mule-Hide recommends the shelf life not exceed 12 months. Stock should be rotated.

PROTECTION & SAFETY

Mule-Hide Cured Cover Tape contains ingredients that could be harmful if mishandled. Contact with skin and eyes should be avoided and necessary protective equipment and clothing should be worn.

Mule-Hide maintains Material Safety Data Sheets on all of its products. Material Safety Data Sheets contain health and safety information for your development of appropriate product handling procedures to protect your employees and customers. Mule-Hide's Material Safety Data Sheets should be read and understood by all of your supervisory personnel and employees before using Mule-Hide products in your facilities.

ADDITIONAL INFORMATION

The information given on this PDS is subject to change without notice. Always check the Mule-Hide website at www.mulehide.com for the latest information, changes and updates or contact Mule-Hide Products Company at 800-786-1492.

DISCLAIMER

The statements provided concerning the material shown are intended as a guide for material usage and are believed to be true and accurate at the time of printing. No statement made by anyone may supersede this information, except when done in writing by Mule-Hide Products Co., Inc. Since the manner of use is beyond our control, Mule-Hide does not authorize anyone to make any warranty of merchantability or fitness for any particular purpose or any other warranty, guarantee or representation, expressed or implied, concerning this material. This product may be eligible for a Mule-Hide warranty, please check the Mule-Hide website at www.mulehide.com or contact Mule-Hide directly at 800-786-1492 for details. Buyer and user accept the product under these conditions and assume the risk of any failure, any injury person or property (including that of the user), loss or liability resulting from the handling, storage or use of the product whether or not it is handled, stored or used in accordance with the directions or specifications. Mule-Hide must be notified in writing of any claims and be given the opportunity to inspect the alleged failure before repairs are made.

Mule-Hide Products Co., Inc.
1195 Prince Hall Dr.
Beloit, WI 53511

MULE-HIDE REINFORCED EPDM MEMBRANE STRIPS ("RMS")

PRODUCT DESCRIPTION

Mule-Hide Reinforced EPDM Membrane Strips (RMS) are available in 6” and 9” widths. The 6” RMS is typically used secure the field membrane at the base of parapets and curbs, eliminating the need for a field seam. The 9” strip is used in the field of the roof for membrane securement.

BASIC USES

Mule-Hide 6” RMS strips are used in conjunction with Mule-Hide's 2" barbed seam plates and Mule-Hide HDP fasteners as securement of the EPDM membranes at the base of parapet walls and curbs. The Mule-Hide 6” RMS strips are installed beneath the EPDM field sheet and used as an alternate method to using the Mule-Hide All Purpose Bar.

The 6” RMS strip may be installed either horizontally or vertically. The EPDM field sheet is then seamed to the RMS. The non-taped RMS can be seamed using Mule-Hide's Tape Primer, along with either our 3" wide or 6” wide In-Seam Tape, or Butyl Spice Adhesive. The 6” RMS is also available with 3” wide In-seam tape pre-applied to one edge. When using the RMS w/Tape, Tape primer must be used to prime the EPDM membrane.

Mule-Hide’s 9” wide RMS strips have two rows of 3” wide In-Seam tape applied to both edges, and is used horizontally for membrane attachment. The EPDM membrane is primed with Tape Primer.

TYPICAL PHYSICAL PROPERTIES

Typical Properties and Characteristics		
Property	6” RMS	9” RMS
Base	Membrane – Reinforced EPDM Adhesive – EPDM	Membrane – Reinforced EPDM Adhesive – EPDM
Roll Size	6” x 100’ (152 mm x 30.5m)	9” x 100’ (228 mm x 30.5m)
Thickness – EPDM Tape	45-mil (1.14 mm) 30-mil (0.76 mm)	45-mil (1.14 mm) 30-mil (0.76 mm)
Packaging	200 LF/ctn (61 m) 2 rolls	100 LF/ctn (30.5 m) 1 roll
Net Wt per Carton	38 lbs (17.2 kg)	33 lbs (15 kg)
Shelf Life	1 year	1 year
Typical properties and characteristics are based on samples tested and are not guaranteed for all samples of this product. This data and information is intended as a guide and does not reflect the specification or specification range for any particular property of this product.		

BENEFITS & SUPPLEMENTAL STATEMENTS

- Ideal for perimeter membrane securement
- Ideal for membrane securement at base of projections
- Available In-Seam Tape pre-applied for easier application
- Can eliminate field seam at roof perimeter

MULE-HIDE REINFORCED EPDM MEMBRANE STRIPS ("RMS")

INSTALLATION INSTRUCTIONS

1. Unroll and position RMS strip
    a. 6” RMS (w/o In-Seam Tape – Position 6” RMS horizontally or vertically in the angle change with 3” of the RMS laying on the horizontal surface.
    b. 6” RMS with In-Seam Tape – Position 6” RMS horizontally or vertically in the angle change with the pre-applied tape facing upward and on the horizontal surface. Tape is to be on ‘roof’ side of RMS.
    c. 9” RMS – Position 9” RMS in the field of the roof with tape side up.
2. Position 2.4” Seam Plates spaced either 6” (150 mm) or 12" (305 mm) on center and secure with a Mule-Hide fastener. Do not fasten plates over top of release liner, as this will cause liner to tear when removed.
    a. 6” RMS – Place 2.4” Seam Plates 1/8” to ¾” from edge of 6” RMS
    b. 9” RMS – Place 2.4” Seam Plates along center line portion of 9” RMS
3. The entire EPDM membrane surface where the RMS will be applied must be cleaned and primed. Neither the splice adhesive nor the In-Seam Tape will adhere to dusted/dirty surfaces. Remove any dirt or dust by wiping with a clean rag. If there is a heavy layer of dirt present, clean the splice area thoroughly with Weathered Membrane Cleaner. Any residual dust/dirt will be detrimental to the bond strength of the In-Seam Tape or Splice Adhesive. See Product Data Sheet for Tape Primer for installation instructions.
4. RMS Preparation
    a. 6” RMS with-out In-Seam Tape – After tape primer has flashed off, apply Splice Adhesive to primed EPDM surfaces that are to be mated together and allow to flash off. See Product Data Sheet for Splice Adhesive for installation instructions.
    b. RMS with In-Seam Tape pre-applied – Remove the release liner(s) from the In-Seam Tape strip(s), pulling it parallel to deck. (do not apply tape primer to In-Seam Tape)
5. Install RMS Strip immediately after primer flashes off to minimize potential dust contamination and promote adhesion in colder weather.
6. Roll the field membrane onto the exposed adhesive and apply hand pressure to the splice area.
7. For 6 RMS installation
    a. Pull the field membrane back to expose the un-adhered portion of the RMS. Apply Mule-Hide Bonding Adhesive to the deck membrane, exposed RMS and parapet wall or curb.
    b. Once adhesive has dried, roll field membrane into the angle change and crease. Roll membrane up the vertical surface and broom to achieve 100% contact.
8. Roll the entire width of the RMS with a 2” (51 mm) wide roller using positive pressure.
   Review Mule-Hide Specifications and details for specific application instructions.

PRECAUTIONS

- Avoid prolonged contact with skin. In case of contact with skin, thoroughly wash affected area with soap and water.
- Prolonged jobsite storage temperatures in excess of 90°F (32°C) will shorten product shelf life.
- In warm, sunny weather, keep In-Seam Tape rolls in original box in a shaded area until ready to use.
- Storage and use of RMS with In-Seam Tape at temperatures below 40°F (4°C) will result in a loss of tape tack and, in extreme cases, will result in no bond to the substrate. Overnight storage must be available to keep the temperature of the RMS with In-Seam Tape at a minimum of 60°F (15°C). Hot boxes for jobsite storage must be provided to maintain a minimum tape temperature of 40°F (4°C).
- RMS must be stored in a dry area.
- Due to solvent flash-off, condensation may occur on freshly applied primer when the ambient temperature is near the dew point. If condensation develops, the application of primer and In-Seam Tape or Splice Adhesive must be discontinued as proper adhesion will not be achieved.
- Allow the primer surface to dry and apply a thin freshener coat of primer to the previously coated surface and apply In-Seam Tape when conditions allow.
- Mule-Hide 2.4” Seam Plates and Mule-Hide fasteners must be used when installing RMS.

MULE-HIDE REINFORCED EPDM MEMBRANE STRIPS ("RMS")

PRECAUTIONS (Continued)

- RMS is intended to be used with BLACK EPDM membranes. Use with White-on-Black EPDM membranes will result in discoloration of the membrane over time.
- KEEP OUT OF REACH OF CHILDREN

PROTECTION & SAFETY

Mule-Hide maintains Material Safety Data Sheets on all of its products. Material Safety Data Sheets contain health and safety information for your development of appropriate product handling procedures to protect your employees and customers. Mule-Hide's Material Safety Data Sheets should be read and understood by all of your supervisory personnel and employees before using Mule-Hide products in your facilities.

ADDITIONAL INFORMATION

The information given on this PDS is subject to change without notice. Always check the Mule-Hide website at www.mulehide.com for the latest information, changes and updates or contact Mule-Hide Products Company at 800-786-1492.

DISCLAIMER

The statements provided concerning the material shown are intended as a guide for material usage and are believed to be true and accurate at the time of printing. No statement made by anyone may supersede this information, except when done in writing by Mule-Hide Products Co., Inc. Since the manner of use is beyond our control, Mule-Hide does not authorize anyone to make any warranty of merchantability or fitness for any particular purpose or any other warranty, guarantee or representation, expressed or implied, concerning this material. This product may be eligible for a Mule-Hide warranty, please check the Mule-Hide website at www.mulehide.com or contact Mule-Hide directly at 800-786-1492 for details. Buyer and user accept the product under these conditions and assume the risk of any failure, any injury person or property (including that of the user), loss or liability resulting from the handling, storage or use of the product whether or not it is handled, stored or used in accordance with the directions or specifications. Mule-Hide must be notified in writing of any claims and be given the opportunity to inspect the alleged failure before repairs are made.

Mule-Hide Products Co., Inc.
1195 Prince Hall Dr.
Beloit, WI 53511

PRODUCT DATA SHEET
PDS 09-4150
Revision Date: Feb-2014

MULE-HIDE UNCURED EPDM FLASHING MEMBRANE

PRODUCT DESCRIPTION

Mule-Hide Uncured EPDM Flashing Membrane is a 60-mil thick, self-curing membrane used for flashings in a Mule-Hide EPDM roofing system. Uncured EPDM Flashing Membrane is adhered using Tape Primer and either Splice Adhesive or In-Seam Tape.

BASIC USES

The Mule-Hide Uncured EPDM Flashing is used as a pliable flashing that can be formed to seal pipes, inside and outside corners, and other projections that cannot be sealed with cured EPDM membrane. Consult specification drawings for installation details.

TYPICAL PHYSICAL PROPERTIES

Physical Properties	**Test Method**	**Typical Values**
Tolerance on Nominal Thickness, %	ASTM D-412	± 10
Tensile Strength, min, psi(Mpa)	ASTM D-412	1305 (9)
Elongation, Ultimate, min, %	ASTM D-412	300
Tear Resistance, min, lbf/in (kN/m)	ASTM D-624 (Die C)	125 (21.9)
Ozone Resistance* Conditions after exposure 110 pphm Ozone in air for 168 hrs @ 104°F(40°C)	ASTM D-1149	No Cracks
Brittleness point, max, deg.F (deg.C)*	ASTM D-746	-49ºF (-45ºC)
Resistance to Water Absorption* After 7 days immersion @ 158°F (70°C), Change in mass, max, %	ASTM D-471	+8, -2
Water Vapor Permeability* max, perm-mils	ASTM E-96 (Proc. B or BW)	0.1
Resistance to Heat Aging, long term Properties after 4 weeks @ 240°F(116°C) Tensile Strength, min, psi(MPa) Elongation, Ultimate, min, % Tear Resistance, min,lbf/in(kN/m) Linear Dimensional Change, max, %	ASTM D-573 ASTM D-412 ASTM D-412 ASTM D-624 ASTM D-1204	 1200(8.3) 200 125(21.9) ± 2.0
Note: These properties are tested after vulcanization of the flashing for 20 minutes at 320°F.		

COLORS

Color is Black

PACKAGING AND STORAGE

18” x 100’ roll – packaged 1 roll per carton – 75 lbs
24” x 100’ roll – packaged 1 roll per carton – 100 lbs

Shelf life is 9 months when stored between 60ºF and 80ºF

MULE-HIDE UNCURED EPDM FLASHING MEMBRANE

INSTALLATION INSTRUCTIONS

Install the Mule-Hide Uncured EPDM Flashing Membrane in accordance with the appropriate current printed Mule-Hide specification. Carefully review and follow the installation instructions in the Mule-Hide Specifications Manual. All flashing details are to be installed in accordance with Mule-Hide's current published details. Mule-Hide Uncured EPDM Flashing Membrane is adhered using Tape Primer and either Splice Adhesive or In-Seam Tape.

PROTECTION & SAFETY

Mule-Hide maintains Material Safety Data Sheets on all of its products. Material Safety Data Sheets contain health and safety information for your development of appropriate product handling procedures to protect your employees and customers. Mule-Hide's Material Safety Data Sheets should be read and understood by all of your supervisory personnel and employees before using Mule-Hide products in your facilities.

ADDITIONAL INFORMATION

The information given on this PDS is subject to change without notice. Always check the Mule-Hide website at www.mulehide.com for the latest information, changes and updates or contact Mule-Hide Products Company at 800-786-1492.

DISCLAIMER

The statements provided concerning the material shown are intended as a guide for material usage and are believed to be true and accurate at the time of printing. No statement made by anyone may supersede this information, except when done in writing by Mule-Hide Products Co., Inc. Since the manner of use is beyond our control, Mule-Hide does not authorize anyone to make any warranty of merchantability or fitness for any particular purpose or any other warranty, guarantee or representation, expressed or implied, concerning this material. This product may be eligible for a Mule-Hide warranty, please check the Mule-Hide website at www.mulehide.com or contact Mule-Hide directly at 800-786-1492 for details. Buyer and user accept the product under these conditions and assume the risk of any failure, any injury person or property (including that of the user), loss or liability resulting from the handling, storage or use of the product whether or not it is handled, stored or used in accordance with the directions or specifications. Mule-Hide must be notified in writing of any claims and be given the opportunity to inspect the alleged failure before repairs are made.

Mule-Hide Products Co., Inc.
1195 Prince Hall Dr.
Beloit, WI 53511

PRODUCT DATA SHEET
PDS 09-4160
Revision Date: Feb-2014

MULE-HIDE UNCURED EPDM FLASHING TAPE

PRODUCT DESCRIPTION

Mule-Hide Uncured EPDM Flashing Tape is an uncured EPDM flashing membrane laminated to cured butyl rubber tape and rolled onto a release liner.

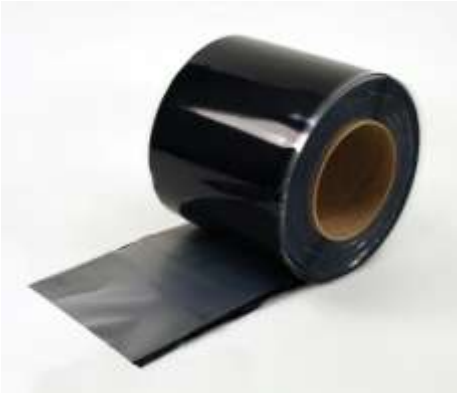

BASIC USES

Mule-Hide Uncured EPDM Flashing Tape was specifically developed for use with EPDM single-ply membrane roofing systems. Mule-Hide's flashing tapes may be used in conjunction with the Mule-Hide Tape Primer to flash inside and outside corners, pipes, pitch pockets or other penetrations that require the flashing to be molded or conform to an irregular shape. Mule-Hide's Uncured EPDM Flashing Tapes are **not permitted** for use in flashing gravel stops, drip aprons or stripping seams or batten bars.

TYPICAL PHYSICAL PROPERTIES

Typical Properties and Characteristics	
Base Polymer	Membrane - EPDM Adhesive - Synthetic Rubber
Color	Black
Ozone Resistance 100 pphm Ozone in air 168 hours @ 104°F @ 50% strain	No cracks
Nominal Thickness	90 mil (2.29 mm)
Brittleness Temperature	-49°F
Nominal Width 6" 12"	 Membrane 6" (152 mm) - Adhesive 6-3/16" (157 mm) Membrane 12" (305 mm) - Adhesive 12-3/16" (310 mm)
Typical Values: Based on material tested in our laboratories but variable from sample to sample. Typical values should not be construed as a guaranteed analysis of any specific lot or as specification items.	

PACKAGING

Typical Packaging			
Width	**Length**	**Unit**	**Weight**
6"	100 lf.	2 per case	38 pounds
6"	25 lf.	8 per case	38 pounds
12"	50 lf.	1 per case	20 pounds

BENEFITS & SUPPLEMENTAL STATEMENTS

- Ideal for flashing irregular pipes, penetrations and other details
- Adaptable to irregular shapes and surfaces
- Self-curing membrane
- Ease of use results in labor and cost savings in field applications

MULE-HIDE UNCURED EPDM FLASHING TAPE

INSTALLATION INSTRUCTIONS

1. The entire EPDM membrane surface where the Uncured EPDM Flashing Tape will be applied must be cleaned and primed. Neither the splice adhesive nor the Uncured EPDM Flashing Tape will adhere to dusted/dirty surfaces. Remove any dirt or dust by wiping with a clean rag. If there is a heavy layer of dirt present, clean the splice area thoroughly with Weathered Membrane Cleaner. Any residual dust/dirt will be detrimental to the bond strength of the Uncured EPDM Flashing Tape or Splice Adhesive. See Product Data Sheet for Tape Primer for installation instructions.
2. Install Uncured EPDM Flashing Tape immediately after primer flashes off to minimize potential dust contamination and promote adhesion in colder weather.
3. Position the Uncured EPDM Flashing Tape over the area to be covered and press down the exposed tape portion using firm, even hand pressure across the entire area. Continue this process until the full area to be flashed is completed.
4. Immediately roll the Uncured EPDM Flashing Tape with a 2" (50 mm) wide roller, using positive pressure. Roll across the flashing edge, not parallel to it.
5. Mule-Hide Uncured EPDM Flashing Tape is used to flash many different roofing system structures and penetrations. The specific method of applying the flashing for each individual situation is different. The appropriate Carlisle Specification and/or detail must be consulted prior to application.
   Review Mule-Hide Specifications and details for specific application instructions.

PRECAUTIONS

- Avoid prolonged contact with skin. In case of contact with skin, thoroughly wash affected area with soap and water.
- Prolonged jobsite storage temperatures in excess of 90°F (32°C) will shorten product shelf life.
- In warm, sunny weather, keep Uncured Flashing Tape rolls in original box in a shaded area until ready to use.
- Storage and use of EPDM Uncured Flashing Tape at temperatures below 40°F (4°C) will result in a loss of tape tack and, in extreme cases, will result in no bond to the substrate. Overnight storage must be available to keep the temperature of the EPDM Uncured Flashing Tape at a minimum of 60°F (15°C). Hot boxes for jobsite storage must be provided to maintain a minimum tape temperature of 40°F (4°C).
- Uncured Flashing Tape must be stored in a dry area.
- Due to solvent flash-off, condensation may occur on freshly applied primer when the ambient temperature is near the dew point. If condensation develops, the application of primer must be discontinued as proper adhesion will not be achieved.
- Allow the primer surface to dry and apply a thin freshener coat of primer to the previously coated surface and apply Uncured Flashing Tape when conditions allow.
- Do not allow waste products (petroleum, grease, oil, solvents, vegetable or mineral oil, animal fats, etc.) or direct steam venting to come in contact with the EPDM Uncured Flashing Tape.
- KEEP OUT OF REACH OF CHILDREN

PROTECTION & SAFETY

Mule-Hide maintains Material Safety Data Sheets on all of its products. Material Safety Data Sheets contain health and safety information for your development of appropriate product handling procedures to protect your employees and customers. Mule-Hide's Material Safety Data Sheets should be read and understood by all of your supervisory personnel and employees before using Mule-Hide products in your facilities.

MULE-HIDE UNCURED EPDM FLASHING TAPE

ADDITIONAL INFORMATION

The information given on this PDS is subject to change without notice. Always check the Mule-Hide website at www.mulehide.com for the latest information, changes and updates or contact Mule-Hide Products Company at 800-786-1492.

DISCLAIMER

The statements provided concerning the material shown are intended as a guide for material usage and are believed to be true and accurate at the time of printing. No statement made by anyone may supersede this information, except when done in writing by Mule-Hide Products Co., Inc. Since the manner of use is beyond our control, Mule-Hide does not authorize anyone to make any warranty of merchantability or fitness for any particular purpose or any other warranty, guarantee or representation, expressed or implied, concerning this material. This product may be eligible for a Mule-Hide warranty, please check the Mule-Hide website at www.mulehide.com or contact Mule-Hide directly at 800-786-1492 for details. Buyer and user accept the product under these conditions and assume the risk of any failure, any injury person or property (including that of the user), loss or liability resulting from the handling, storage or use of the product whether or not it is handled, stored or used in accordance with the directions or specifications. Mule-Hide must be notified in writing of any claims and be given the opportunity to inspect the alleged failure before repairs are made.

Mule-Hide Products Co., Inc.
1195 Prince Hall Dr.
Beloit, WI 53511

PRODUCT DATA SHEET
PDS 09-4162
Revision Date: 09/17/09

MULE-HIDE UNCURED EPDM FLASHING TAPE - WHITE

PRODUCT DESCRIPTION

Mule-Hide Uncured EPDM Flashing Tape is an uncured EPDM flashing membrane laminated to cured butyl rubber tape and rolled onto a release liner.

BASIC USES

Mule-Hide Uncured EPDM Flashing Tape was specifically developed for use with EPDM single-ply membrane roofing systems. Mule-Hide's flashing tapes may be used in conjunction with the Mule-Hide Tape Primer to flash inside and outside corners, pipes, pitch pockets or other penetrations that require the flashing to be molded or conform to an irregular shape. Mule-Hide's Uncured EPDM Flashing Tapes are **not permitted** for use in flashing gravel stops, drip aprons or stripping seams or batten bars.

SPECIFICATIONS

Base Polymer	Membrane -EPDM Adhesive -Synthetic Rubber
Color	WHITE
Ozone Resistance 100 pphm Ozone in air 168 hours @ 104°F @ 50% strain	No cracks
Nominal Thickness	95 mil (1.91 mm)
Brittleness Temperature	-49°F
Nominal Width 9" 12"	 Membrane 9" (230 mm) -Adhesive 9-3/16" (235 mm) Membrane 12" (305 mm) -Adhesive 12-3/16" (310 mm)

Typical Values: Based on material tested in our laboratories but variable from sample to sample. Typical values should not be construed as a guaranteed analysis of any specific lot or as specification items.

PACKAGING

Width	Length	Unit	Weight
9"	50 lf.	1 per case	16.5 pounds
12"	50 lf.	1 per case	22 pounds

BENEFITS & SUPPLEMENTAL STATEMENTS

- Contains no solvent
- Labor savings up to 50%
- Superior tack and green strength
- Superior peel and shear strengths
- Ease of installation
- Reduces application problems of adhesives
- Strength improves with age

INSTALLATION

Using Scotch-Brite® scrub pads or clean rags, clean the membrane area thoroughly with Mule-Hide's Tape Primer. Unroll the flashing tape and cut a sufficient amount to flash the detail. Install the Mule-Hide Uncured EPDM Flashing Tape in accordance with the appropriate current printed Mule-Hide specification and details.

MULE-HIDE UNCURED EPDM FLASHING TAPE - WHITE

STORAGE & HANDLING

Mule-Hide Uncured EPDM Flashing Tape is a combination of both cured and uncured product. For this reason Mule-Hide recommends the shelf life not exceed 9 months. Stock should be rotated.

PROTECTION & SAFETY

1. Avoid prolonged contact with skin. In case of contact with skin, thoroughly wash affected area with soap and water.
2. Prolonged job site storage temperatures in excess of 90ºF (32ºC) may affect product shelf life. In warm, sunny weather; keep Product rolls in their box or in a shaded area until ready to use.
3. Storage and use of Product at temperatures below 40ºF (4ºC) will result in a loss of adhesive tack, and in extreme cases, will result in no bond to the substrate. Overnight storage must be available to keep the temperature of the Product at a minimum of 60ºF (15ºC). Hot boxes for job site storage must be provided to maintain a minimum product temperature of 40ºF (4ºC).
4. Product must be stored in a dry area.
5. Due to solvent flash-off, condensation may form on applied Primer when the ambient temperature is near the dew point. If condensation develops, the application of Primer and Product must be discontinued since proper adhesion will not be achieved. Allow the surface to dry and apply Primer to the previously coated surface and apply Product when conditions allow.
6. Do not allow waste products (petroleum, grease, oil, solvents, vegetable or mineral oil, animal fats, etc.) or direct steam venting to come in contact with the Sure-White Product.
7. A heat gun is required when forming Product in colder temperatures as outlined in the specification.
8. KEEP OUT OF THE REACH OF CHILDREN.

Mule-Hide maintains Material Safety Data Sheets on all of its products. Material Safety Data Sheets contain health and safety information for your development of appropriate product handling procedures to protect your employees and customers. Mule-Hide's Material Safety Data Sheets should be read and understood by all of your supervisory personnel and employees before using Mule-Hide products in your facilities.

ADDITIONAL INFORMATION

The information given on this PDS is subject to change without notice. Always check the Mule-Hide website at www.mulehide.com for the latest information, changes and updates or contact Mule-Hide Products Company at 800-786-1492.

DISCLAIMER

The statements provided concerning the material shown are intended as a guide for material usage and are believed to be true and accurate at the time of printing. No statement made by anyone may supersede this information, except when done in writing by Mule-Hide Products Co., Inc. Since the manner of use is beyond our control, Mule-Hide does not authorize anyone to make any warranty of merchantability or fitness for any particular purpose or any other warranty, guarantee or representation, expressed or implied, concerning this material. This product may be eligible for a Mule-Hide warranty, please check the Mule-Hide website at www.mulehide.com or contact Mule-Hide directly at 800-786-1492 for details. Buyer and user accept the product under these conditions and assume the risk of any failure, any injury person or property (including that of the user), loss or liability resulting from the handling, storage or use of the product whether or not it is handled, stored or used in accordance with the directions or specifications. Mule-Hide must be notified in writing of any claims and be given the opportunity to inspect the alleged failure before repairs are made.

Mule-Hide Products Co., Inc.
1195 Prince Hall Dr.
Beloit, WI 53511

PRODUCT DATA SHEET
PDS 09-4215
Revision Date: Nov-2013

POURABLE SEALER POCKETS

PRODUCT DESCRIPTION

Mule-Hide Pourable Sealer Pockets are prefabricated pockets consisting of a 2" (50 mm) wide plastic support strip with attached Uncured EPDM Flashing Tape.

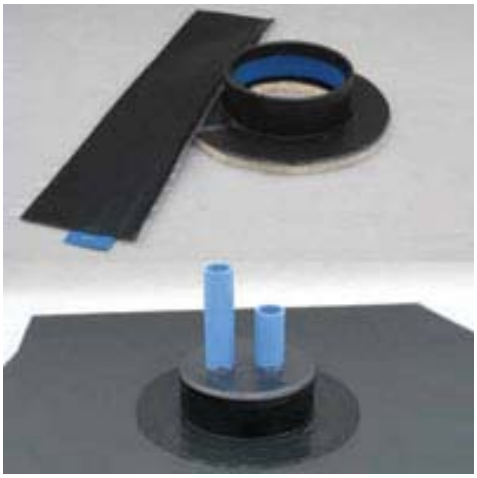

BASIC USES

Mule-Hide's Pourable Sealer Pockets are ideal for sealing irregular, hard to flash penetrations through the membrane.

BENEFITS & SUPPLEMENTAL STATEMENTS

- Available in 4" (100 mm), 6" (150 mm) and 8" (200 mm) diameters
- Pockets can be combined to create larger pockets as needed
- Pockets can be stacked two high to create taller pockets

SPECIFICATIONS

Color:	Black
Size / Weight:	4" – 12 per carton - 5 lbs (2.25 kg) 6" – 12 per carton – 7 lbs (3.2 kg) 8" – 12 per carton – 9 lbs (4.1 kg)
Shelf Life:	Nine (9) months when stored between 60°F - 80°F (15°C - 26°C)

Typical properties and characteristics are based on samples tested and are not guaranteed for all samples of this product. This data and information is intended as a guide and does not reflect the specification or specification range for any particular property of this product.

INSTALLATION INSTRUCTIONS

1. Clean all mating surfaces with Weathered Membrane Cleaner and allow to dry. **Prime** all surfaces that will contact Pourable Sealer with Tape Primer, including deck membrane, penetration and uncured flashing. Primer should also be applied to blue plastic strip that forms inside wall of sealer pocket.
2. Remove the colored poly from the flashing side of the pocket and save for later. Then remove the clear poly from the blue support ring (plastic strip). Place the clear poly on the flashing side and fold in half with blue support ring on outside.
3. Join the two tabs by inserting the tab into the slot. Tab should be on the inside of the pocket. A more uniform circular shape can be accomplished by rolling the assemble pocket in your hands. Remove the clear poly from the flange of the pocket.
4. Position the sealer pocket to achieve a minimum 1" clearance from the penetration to the side of the pocket.
5. Starting at the overlap, form the flange to the deck membrane without stretching it. Continue forming the flange and stop approximately half way around the pocket.
6. To complete the vertical splice of the sealer pocket, remove the clear poly and apply tape primer to the splice area. Allow the primer to flash off. Set the top edge and roll the flashing into the angle change. Next, roll the flashing down onto the deck without stretching. Pull the corner of the flange to achieve a minimum 3" wide deck splice.
7. Roll the top of the flashing down inside the pocket. Roll the detail with a 2" roller, paying attention to the angle change.
8. Prime the inside of the pocket and projection with tape primer. After the primer has flashed, fill the pocket with pourable sealer.

POURABLE SEALER POCKETS

INSTALLATION INSTRUCTIONS (Continued)

9. Completely fill the pocket and crown the top surface to prevent ponding water. But be sure not to overfill or allow pourable sealer to overflow the pocket. If the pourable sealer overflows the pocket, it must be cleaned up.
10. Pourable sealer must be a minimum of 2” deep.
11. Do not use where the maximum temperature will exceed 180ºF (82ºC).

STORAGE & HANDLING

Normal shelf life is nine (9) months when stored between 60ºF and 80ºF (15ºC to 26ºC). Job site storage temperature over 90ºF (32ºC) may affect product shelf life.

PROTECTION & SAFETY

Mule-Hide maintains Material Safety Data Sheets on all of its products. Material Safety Data Sheets contain health and safety information for your development of appropriate product handling procedures to protect your employees and customers. Mule-Hide's Material Safety Data Sheets should be read and understood by all of your supervisory personnel and employees before using Mule-Hide products in your facilities.

ADDITIONAL INFORMATION

The information given on this PDS is subject to change without notice. Always check the Mule-Hide website at www.mulehide.com for the latest information, changes and updates or contact Mule-Hide Products Company at 800-786-1492.

DISCLAIMER

The statements provided concerning the material shown are intended as a guide for material usage and are believed to be true and accurate at the time of printing. No statement made by anyone may supersede this information, except when done in writing by Mule-Hide Products Co., Inc. Since the manner of use is beyond our control, Mule-Hide does not authorize anyone to make any warranty of merchantability or fitness for any particular purpose or any other warranty, guarantee or representation, expressed or implied, concerning this material. This product may be eligible for a Mule-Hide warranty, please check the Mule-Hide website at www.mulehide.com or contact Mule-Hide directly at 800-786-1492 for details. Buyer and user accept the product under these conditions and assume the risk of any failure, any injury person or property (including that of the user), loss or liability resulting from the handling, storage or use of the product whether or not it is handled, stored or used in accordance with the directions or specifications. Mule-Hide must be notified in writing of any claims and be given the opportunity to inspect the alleged failure before repairs are made.

Mule-Hide Products Co., Inc.
1195 Prince Hall Dr.
Beloit, WI 53511

PRODUCT DATA SHEET
PDS 09-4301
Revision Date: Jan-2014

MULE-HIDE PREMOLDED EPDM PIPE BOOTS

PRODUCT DESCRIPTION

Mule-Hide Premolded EPDM Pipe Boots are economical, pre-fabricated flashings designed for single pipe penetrations on single-ply EPDM roofing systems. The premolded pipe boots are available with or without a butyl tape ring laminated to the bottom side of the three (3) inch base flange.

BASIC USES

Mule-Hide's Premolded EPDM Pipe Boots will accommodate single pipe sizes from 1" to 6" in diameter. With their conical-shaped steps, the pipe boots will securely seal all single pipe penetrations. The large, double-thick, molded rib at the top of each step offers superior tear-resistance and reinforcement, as well as a cutting guide.

TYPICAL PHYSICAL PROPERTIES

Physical Property	½” to 3”	1” to 6”
Material	Molded EPDM	Molded EPDM
Color	White or Black	White or Black
Size	½” to 3” (12 mm to 75 mm) pipe	1” to 6” (25 mm to 150 mm) pipe
Packaging	10 per carton	10 per carton
Weight	7 lbs per carton (3.2 kg)	11 lbs per carton (5 kg)
Shelf Life	1 year	1 year
Typical properties and characteristics are based on samples tested and are not guaranteed for all samples of this product. This data and information is intended as a guide and does not reflect the specification or specification range for any particular property of this product.		

BENEFITS & SUPPLEMENTAL STATEMENTS

- Available in two sizes to flash pipes from ½” to 3” (12mm to 75mm) and from 1” to 6” (25 mm to 150 mm)
- Pipe boots are available with pre-applied butyl tape for easy installation and strong bonding to membrane
- Designed for use with Mule-Hide EPDM roofing membranes

INSTALLATION INSTRUCTIONS

1. Remove all lead and other flashing materials. Remove any pipe insulation.
2. The entire surface where the Pipe Boot will be installed must be clean. The adhesive tape on the back of Pipe Boot will not adhere to dusted or dirty surfaces. Any residual contamination will reduce the bond strength of the adhesive.
3. Remove all foreign material from roofing membrane.
    a. Remove excess mica dust or talc from membrane surface by brooming or wiping with a clean, dry rag.
    b. The use of Weathered Membrane Cleaner may be necessary. This process is essential on membrane that has been exposed for a number of weeks.
    Note: Permeation-resistant gloves (that meet ANSI/ISEA 105- 2005) are required for hand protection when cleaners or primers are being used.
    c. Allow the membrane to dry thoroughly before proceeding.
4. Cut the Pipe Boot above the raised “ring” that is one size smaller than pipe diameter.
5. Pull Pipe Boot over pipe until base flange is in contact with the membrane.
6. Mark pipe around the top of the Pipe Boot.
7. Pull Pipe Boot upwards on pipe until mark on the pipe is visible.

MULE-HIDE PREMOLDED PIPE BOOTS

INSTALLATION INSTRUCTIONS (continued)

8. Install Water Cut-Off Mastic below the mark, which indicates the top of the installed Pipe Boot.
9. Apply tape primer with a clean Scotch-Brite pad. Scrub the area of the membrane (where the Pipe Boot is to be applied) in a circular motion to achieve a thin, even coating on the membrane. The properly cleaned/primed area will be uniform in color without streaks and free of globs or puddles.
   Note: The use of excessive amounts of primer will not enhance the adhesion of the Pipe Boot to the EPDM membrane. Use only the amount necessary to obtain 100%coverage of the area where the Pipe Boot will be applied.
10. Allow the tape primer to properly flash off until it does not transfer to a dry finger touch.
11. Pre-taped Pipe Boot
    a. Install the Pipe Boot as soon as the primer flashes off to minimize potential dust contamination and promote adhesion in colder weather.
    b. Pull the Pipe Boot back down over the pipe and into position.
    c. Remove release liner from the taped flange and, using hand pressure, press tape into the primed area. Roll seam area with 2” roller.
12. Pipe Boot installed with Black Splice Adhesive
    a. Thoroughly stir the Splicing Adhesive. Apply an even coating of Splice Adhesive to both primed surfaces (membrane and bottom of Pipe Boot flange) and allow to dry until tacky but will not string, stick or move when touched or pushed with a dry finger (approximate drying time may vary between 15 to 45 minutes).
    b. Pull the Pipe Boot back down over the pipe and into position.
    c. Press flange of Pipe Boot into position using hand pressure. Roll seam area with 2” roller.
13. Install a stainless steel clamping ring to the top of the Pipe Boot to provide constant compression of the Water Cut-Off Mastic.
14. When a field seam intersects a Pipe Boot, install a T-Joint patch.
    Review Mule-Hide specifications and details for additional installation information.

PRECAUTIONS

- All existing flashings, insulation and debris must be removed (including lead flashings)
- Temperature of projection must not exceed 180ºF (82ºC)
- Deck flanges of Pipe Boot must not be overlapped, cut or applied over any angle change.
- Ensure that clamping ring is properly sized

LEED Information

Pre-consumer Recycled Content	2%
Post-consumer Recycled Content	0%
Manufacturing Location	Greenville, IL
Solar Reflectance Index (SRI)	N/A

PROTECTION & SAFETY

Mule-Hide maintains Material Safety Data Sheets on all of its products. Material Safety Data Sheets contain health and safety information for your development of appropriate product handling procedures to protect your employees and customers. Mule-Hide's Material Safety Data Sheets should be read and understood by all of your supervisory personnel and employees before using Mule-Hide products in your facilities.

MULE-HIDE PREMOLDED EPDM PIPE BOOTS

ADDITIONAL INFORMATION

The information given on this PDS is subject to change without notice. Always check the Mule-Hide website at www.mulehide.com for the latest information, changes and updates or contact Mule-Hide Products Company at 800-786-1492.

DISCLAIMER

The statements provided concerning the material shown are intended as a guide for material usage and are believed to be true and accurate at the time of printing. No statement made by anyone may supersede this information, except when done in writing by Mule-Hide Products Co., Inc. Since the manner of use is beyond our control, Mule-Hide does not authorize anyone to make any warranty of merchantability or fitness for any particular purpose or any other warranty, guarantee or representation, expressed or implied, concerning this material. This product may be eligible for a Mule-Hide warranty, please check the Mule-Hide website at www.mulehide.com or contact Mule-Hide directly at 800-786-1492 for details. Buyer and user accept the product under these conditions and assume the risk of any failure, any injury person or property (including that of the user), loss or liability resulting from the handling, storage or use of the product whether or not it is handled, stored or used in accordance with the directions or specifications. Mule-Hide must be notified in writing of any claims and be given the opportunity to inspect the alleged failure before repairs are made.

Mule-Hide Products Co., Inc.
1195 Prince Hall Dr.
Beloit, WI 53511

PRODUCT DATA SHEET
PDS 09-4530
Revision Date: Feb-2014

MULE-HIDE PRE-CUT INSIDE/OUTSIDE CORNERS

PRODUCT DESCRIPTION

Mule-Hide Pre-Cut Inside/Outside Corners consist of .060 inch (1.5mm) thick uncured EPDM flashing material laminated to cured butyl rubber tape and rolled onto a poly release liner providing .090 mils (2.25mm) of total thickness.

BASIC USES

Mule-Hide Pre-Cut Inside/Outside Corners are ideal for installing inside and outside corners on Mule-Hide EPDM roofing systems.

SPECIFICATIONS

Sizes:	7" x 9" (180 mm x 230 mm)
Packaging:	20 per carton
Weight:	5 lbs. per carton (2.25Kg)
Color:	Black
Shelf Life:	Nine (9) months when stored between 60°F and 80°F (15°C and 26°C)
Typical properties and characteristics are based on samples tested and are not guaranteed for all samples of this product. This data and information is intended as a guide and does not reflect the specification range for any particular property of this product.	

BENEFITS & SUPPLEMENTAL STATEMENTS

- Pre-cut corners increase installation speed by eliminating cutting time eliminating
- Pre-applied adhesive eliminates need to apply splice adhesive
- Cleaner appearance as all corners are cut to same size

INSTALLATION INSTRUCTIONS

1. The entire EPDM membrane surface where the Pre Cut Corners will be applied must be cleaned and primed. Neither the splice adhesive nor the Pre Cut Corners will adhere to dusted/dirty surfaces. Remove any dirt or dust by wiping with a clean rag. If there is a heavy layer of dirt present, clean the splice area thoroughly with Weathered Membrane Cleaner. Any residual dust/dirt will be detrimental to the bond strength of the Pre Cut Corners. See Product Data Sheet for Tape Primer for installation instructions.
2. Install Pre Cut Corners immediately after primer flashes off to minimize potential dust contamination and promote adhesion in colder weather.
3. Peel off one piece of the release liner and apply corner to the vertical wall. Remove the other piece of liner and work corner onto the deck from the corner out using even hand pressure across the entire area.
4. Immediately roll the Inside/Outside Corner with a 2" (50 mm) wide roller, using positive pressure.
5. Apply Lap Sealant at overlaps in PS Inside/Outside Corners or at joints in the metal edging according to the appropriate detail.
   .Review Mule-Hide Specifications and details for specific application instructions.

PRECAUTIONS

- Avoid prolonged contact with skin. In case of contact with skin, thoroughly wash affected area with soap and water.
- Prolonged jobsite storage temperatures in excess of 90°F (32°C) will shorten product shelf life.

MULE-HIDE PRE-CUT INSIDE/OUTSIDE CORNERS

PRECAUTIONS (Continued)

- In warm, sunny weather, keep Pre Cut Corners in original box in a shaded area until ready to use.
- Storage and use of Pre Cut Corners at temperatures below 40°F (4°C) will result in a loss of tape tack and, in extreme cases, will result in no bond to the substrate. Overnight storage must be available to keep the temperature of the Pre Cut Corners at a minimum of 60°F (15°C). Hot boxes for jobsite storage must be provided to maintain a minimum tape temperature of 40°F (4°C).
- Pre Cut Corners must be stored in a dry area.
- Due to solvent flash-off, condensation may occur on freshly applied primer when the ambient temperature is near the dew point. If condensation develops, the application of primer must be discontinued as proper adhesion will not be achieved.
- Allow the primer surface to dry and apply a thin freshener coat of primer to the previously coated surface and apply Uncured Flashing Tape when conditions allow.
- Do not allow waste products (petroleum, grease, oil, solvents, vegetable or mineral oil, animal fats, etc.) or direct steam venting to come in contact with the Pre Cut Corners.
- KEEP OUT OF REACH OF CHILDREN

PROTECTION & SAFETY

Mule-Hide maintains Material Safety Data Sheets on all of its products. Material Safety Data Sheets contain health and safety information for your development of appropriate product handling procedures to protect your employees and customers. Mule-Hide's Material Safety Data Sheets should be read and understood by all of your supervisory personnel and employees before using Mule-Hide products in your facilities.

ADDITIONAL INFORMATION

The information given on this PDS is subject to change without notice. Always check the Mule-Hide website at www.mulehide.com for the latest information, changes and updates or contact Mule-Hide Products Company at 800-786-1492.

DISCLAIMER

The statements provided concerning the material shown are intended as a guide for material usage and are believed to be true and accurate at the time of printing. No statement made by anyone may supersede this information, except when done in writing by Mule-Hide Products Co., Inc. Since the manner of use is beyond our control, Mule-Hide does not authorize anyone to make any warranty of merchantability or fitness for any particular purpose or any other warranty, guarantee or representation, expressed or implied, concerning this material. This product may be eligible for a Mule-Hide warranty, please check the Mule-Hide website at www.mulehide.com or contact Mule-Hide directly at 800-786-1492 for details. Buyer and user accept the product under these conditions and assume the risk of any failure, any injury person or property (including that of the user), loss or liability resulting from the handling, storage or use of the product whether or not it is handled, stored or used in accordance with the directions or specifications. Mule-Hide must be notified in writing of any claims and be given the opportunity to inspect the alleged failure before repairs are made.

Mule-Hide Products Co., Inc.
1195 Prince Hall Dr.
Beloit, WI 53511

PRODUCT DATA SHEET
PDS 09-5110
Revision Date: Oct-2013

MULE-HIDE 2.4" SEAM PLATES

PRODUCT DESCRIPTION

Mule-Hide's 2.4" Seam Plates are round Galvalume coated metal plates with (14) barbed anchors and reinforcing ribs for superior wind uplift resistance

BASIC USES

Mule-Hide's 2.4" Seam Plates are designed for the mechanical attachment of the Mule-Hide Reinforced EPDM, PVC and TPO membranes. The 2.4" Seam Plates are attached with Mule-Hide HDP Fasteners or EHD Fasteners. In addition to securing mechanically attached reinforced membranes, our 2.4" Seam Plates can be used with our reinforced 6" wide RMS, or our 6" wide and 10" wide RUSS™ Strips.

SPECIFICATIONS

Material:	20 ga. Galvalume coated metal
Coating:	Galvalume AZ 55 meeting ASTM A 792 Grade 50A
Corrosion:	Meets FM corrosion standard 4470
Pull Thru:	Flat truss head pulled through the center hole of the plate, minimum pull thru: 800 lbs.

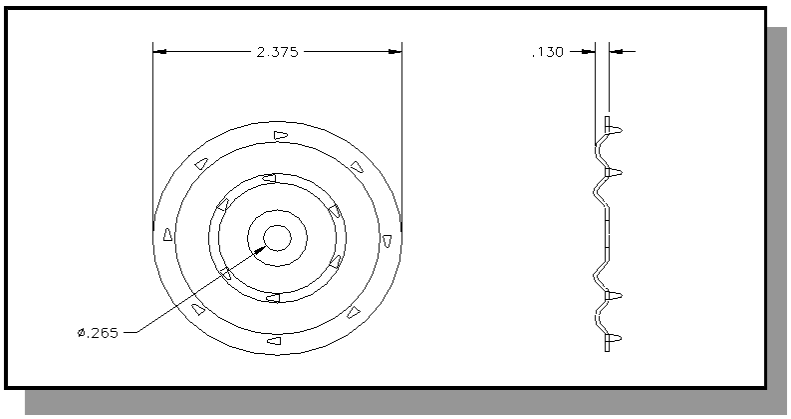

CODE APPROVALS/COMPLIANCE

Mule-Hide HDP Fasteners comply with the requirements of the following specifications, test and code requirements when properly installed.

* FM Standard 4450/4470 Approval * Metro-Dade Approved *Florida Product Approval

PACKAGING

Packaged in cartons of 1,000, approximate weight is 40# per box.

INSTALLATION INSTRUCTIONS

Install Mule-Hide 2.4" Seam Plates with barbs facing toward membrane (see appropriate detail drawing).
Secure 2.4" Seam Plate with Mule-Hide HDP or EHD fasteners in to substrate.
Use eye protection when installing fasteners.

MULE-HIDE 2.4" SEAM PLATES

PROTECTION & SAFETY

Mule-Hide maintains Material Safety Data Sheets on all of its products. Material Safety Data Sheets contain health and safety information for your development of appropriate product handling procedures to protect your employees and customers. Mule-Hide's Material Safety Data Sheets should be read and understood by all of your supervisory personnel and employees before using Mule-Hide products in your facilities.

LEED INFORMATION

Recycled Content

Postconsumer (1)	40%
Preconsumer (2)	18%
Total Recycled Content (3)	58%
LEED – Eligible Recycled Content (4)	49%

(1) Postconsumer material is defined as waste material generated by households or commercial, industrial and institutional facilities in their role as end-users of the product, which can no longer be used for its intended purposes.
(2) Preconsumer material is defined as material diverted from the waste stream during the manufacturing process. Reutilization of materials (i.e. rework, regrind or scrap generated in a process and capable of being reclaimed within the same process that generated it) is excluded.
(3) Total Recycled Content = Postconsumer Content + Preconsumer Content.
(4) LEED-Eligible Recycled Content = Postconsumer + ½ Preconsumer Content (per LEED Standard). Recycled content value is determined by weight.

ADDITIONAL INFORMATION

The information given on this PDS is subject to change without notice. Always check the Mule-Hide website at www.mulehide.com for the latest information, changes and updates or contact Mule-Hide Products Company at 800-786-1492.

DISCLAIMER

The statements provided concerning the material shown are intended as a guide for material usage and are believed to be true and accurate at the time of printing. No statement made by anyone may supersede this information, except when done in writing by Mule-Hide Products Co., Inc. Since the manner of use is beyond our control, Mule-Hide does not authorize anyone to make any warranty of merchantability or fitness for any particular purpose or any other warranty, guarantee or representation, expressed or implied, concerning this material. This product may be eligible for a Mule-Hide warranty, please check the Mule-Hide website at www.mulehide.com or contact Mule-Hide directly at 800-786-1492 for details. Buyer and user accept the product under these conditions and assume the risk of any failure, any injury person or property (including that of the user), loss or liability resulting from the handling, storage or use of the product whether or not it is handled, stored or used in accordance with the directions or specifications. Mule-Hide must be notified in writing of any claims and be given the opportunity to inspect the alleged failure before repairs are made.

Mule-Hide Products Co., Inc.
1195 Prince Hall Dr.
Beloit, WI 53511

MULE-HIDE 3” INSULATION PLATES

PRODUCT DESCRIPTION

Mule-Hide ‘s 3” Insulation Plates are round Galvalume coated metal plates with reinforcing ribs for superior wind uplift resistance

BASIC USES

Mule-Hide's 3” Insulation Plates are designed specifically for the mechanical attachment of Mule-Hide’s Poly ISO 1 and Poly ISO 2 insulation and other FM Approved insulation / cover boards.

SPECIFICATIONS

Material: 26 ga. Galvalume coated metal
Coating: Galvalume AZ 50 meeting ASTM A 792 Grade 50A
Corrosion: Meets FM corrosion standard 4470

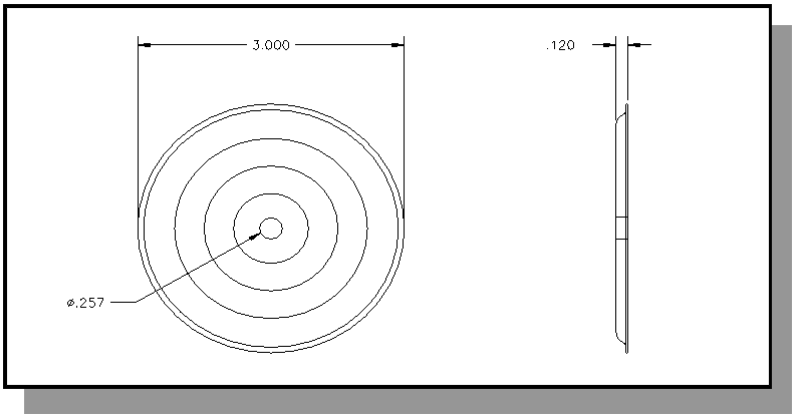

CODE APPROVALS/COMPLIANCE

Mule-Hide HDP Fasteners comply with the requirements of the following specifications, test and code requirements when properly installed.

* FM Standard 4450/4470 Approval * Metro-Dade Approved *Florida Product Approval

PACKAGING

Packaged in cartons of 1,000, approximate weight is 40# per box.

INSTALLATION INSTRUCTIONS

Install Mule-Hide 3” Insulation Plates with head indentation facing upward.
Secure 2.4” Seam Plate with Mule-Hide HDP or EHD fasteners in to substrate.
Use eye protection when installing fasteners.

MULE-HIDE 3" INSULATION PLATES

PROTECTION & SAFETY

Mule-Hide maintains Material Safety Data Sheets on all of its products. Material Safety Data Sheets contain health and safety information for your development of appropriate product handling procedures to protect your employees and customers. Mule-Hide's Material Safety Data Sheets should be read and understood by all of your supervisory personnel and employees before using Mule-Hide products in your facilities.

LEED INFORMATION

Recycled Content

Postconsumer (1)	40%
Preconsumer (2)	18%
Total Recycled Content (3)	58%
LEED – Eligible Recycled Content (4)	49%

(1) Postconsumer material is defined as waste material generated by households or commercial, industrial and institutional facilities in their role as end-users of the product, which can no longer be used for its intended purposes.
(2) Preconsumer material is defined as material diverted from the waste stream during the manufacturing process. Reutilization of materials (i.e. rework, regrind or scrap generated in a process and capable of being reclaimed within the same process that generated it) is excluded.
(3) Total Recycled Content = Postconsumer Content + Preconsumer Content.
(4) LEED-Eligible Recycled Content = Postconsumer + ½ Preconsumer Content (per LEED Standard). Recycled content value is determined by weight.

ADDITIONAL INFORMATION

The information given on this PDS is subject to change without notice. Always check the Mule-Hide website at www.mulehide.com for the latest information, changes and updates or contact Mule-Hide Products Company at 800-786-1492.

DISCLAIMER

The statements provided concerning the material shown are intended as a guide for material usage and are believed to be true and accurate at the time of printing. No statement made by anyone may supersede this information, except when done in writing by Mule-Hide Products Co., Inc. Since the manner of use is beyond our control, Mule-Hide does not authorize anyone to make any warranty of merchantability or fitness for any particular purpose or any other warranty, guarantee or representation, expressed or implied, concerning this material. This product may be eligible for a Mule-Hide warranty, please check the Mule-Hide website at www.mulehide.com or contact Mule-Hide directly at 800-786-1492 for details. Buyer and user accept the product under these conditions and assume the risk of any failure, any injury person or property (including that of the user), loss or liability resulting from the handling, storage or use of the product whether or not it is handled, stored or used in accordance with the directions or specifications. Mule-Hide must be notified in writing of any claims and be given the opportunity to inspect the alleged failure before repairs are made.

Mule-Hide Products Co., Inc.
1195 Prince Hall Dr.
Beloit, WI 53511

PRODUCT DATA SHEET
PDS 09-5220
Revision Date: OCT-2013

MULE-HIDE DRILL POINT FASTENERS

PRODUCT DESCRIPTION

Mule-Hide Drill Point Fasteners are # 12 fasteners manufactured from C-1022 heat treated wire. These fasteners incorporate a No. 3 Phillips recess, flat truss head with a #2 double flute self-drilling point. The drill point has an exclusive tapered entry thread design that allows for fastener penetration into steel roof decks and offers exceptional back-out resistance.

BASIC USES

Mule-Hide's Drill Point Fasteners are designed specifically for the mechanical attachment of Mule-Hide's Poly ISO 1 and Poly ISO 2 roof insulation boards and other FM approved insulation / cover boards into steel and wood decks. The Mule-Hide Drill Point Fasteners may be used in conjunction with the Mule-Hide 3" Insulation Plates. Refer to Mule-Hide's appropriate Single-Ply Manuals for installation instructions and uses.

SPECIFICATIONS

Wire:	---	SAE C-1022, heat treated wire
Coating:	---	TRU-Kote PC-3
Corrosion Resistance	FM 4470, DIN 50018	<15% Red Rust after 30 cycles
Tensile Strength	ASTM F606-10	2500 lb.
Shear Strength	NASM 1312-20	1900 lb. (thread zone)

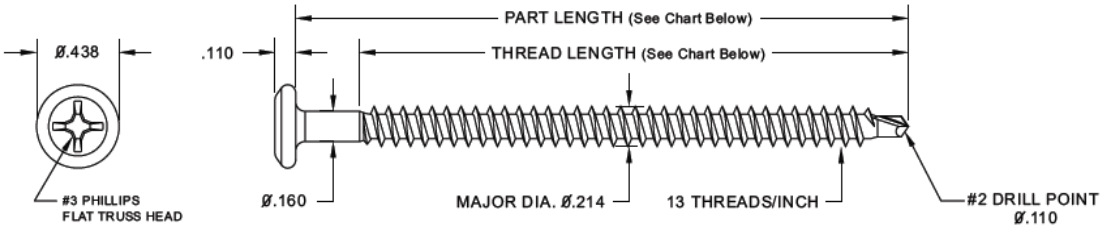

PACKAGING

Screw Length*	Thread Length*	Pieces/Box	Weight/Box
1-5/8"	1-5/8"	1000	11.8 lbs
2-1/4"	2-1/4"	1000	16.2 lbs
2-7/8'	2-7/8"	1000	19.7 lbs
3-1/4"	2-7/8"	1000	21.5 lbs
3-3/4"	2-7/8"	1000	24.6 lbs
4-1/2"	3-7/8"	1000	28.8 lbs
5"	3-7/8"	1000	31.5lbs
6"	3-7/8"	1000	37.1 lbs
7"	3-7/8"	500	20.9 lbs
8"	3-7/8"	500	23.9 lbs
Screw Length and Thread Length are ± 1/16"			

PERFORMANCE INFORMTION

Average Ultimate Pullout Values in Corrugated Steel Deck Substrates													
Thickness	24 ga.	22 ga.			20 ga.			18 ga.			16 ga.		
Strength, ksi	36.5	33.0	80.0	102.0	33.0	80.0	102.0	33.0	80.0	102.0	33.0	80.0	102.0
Pullout (lbs)	230	285	410	465	355	505	580	540	715	800	710	1000	1142

MULE-HIDE DRILL POINT FASTENERS

PERFORMANCE INFORMATION (continued)

Average Ultimate Pullout Values in Wood Substrates								
Type	APA Rated OSB				APA Rated Plywood			
Thickness	7/16”	15/32”	19/32”	23/32”	15/32”	19/32”	23/32”	SPF #2
Pullout (lbs)	265	300	325	440	365	475	720	700*

*lbf./in. of thread penetration including tip.

Pull out values are offered only as a guide and are not guaranteed in any way.
Designated holding powers are dependent upon quality of substrate and accuracy of installation.
Mule-Hide recommends that fastener pull out testing be performed to verify fastener performance.

CODE APPROVALS/COMPLIANCE

Mule-Hide Drill Point Fasteners comply with the requirements of the following specifications, test and code requirements when properly installed.

* FM Standard 4450/4470 Approval * Metro-Dade Approved *Florida Product Approval

INSTALLATION INSTRUCTIONS

Steel and Wood Decks
Install fasteners with #3 Phillips drive bit provided in box and a variable speed screw gun. Fastener must penetrate the deck a minimum of ¾” as measured from the underside of the roof deck to the fastener tip. Ensure that fastener is installed perpendicular to surface of roof deck. Care should be taken to not overdrive the fastener causing damage to roof insulation, fastener or roof deck.

Use eye protection when installing fasteners.

PROTECTION & SAFETY

Mule-Hide maintains Material Safety Data Sheets on all of its products. Material Safety Data Sheets contain health and safety information for your development of appropriate product handling procedures to protect your employees and customers. Mule-Hide's Material Safety Data Sheets should be read and understood by all of your supervisory personnel and employees before using Mule-Hide products in your facilities.

LEED INFORMATION

Recycled Content

Postconsumer (1)	15%
Preconsumer (2)	10%
Total Recycled Content (3)	25%
LEED – Eligible Recycled Content (4)	20%

(1) Postconsumer material is defined as waste material generated by households or commercial, industrial and institutional facilities in their role as end-users of the product, which can no longer be used for its intended purposes.
(2) Preconsumer material is defined as material diverted from the waste stream during the manufacturing process. Reutilization of materials (i.e. rework, regrind or scrap generated in a process and capable of being reclaimed within the same process that generated it) is excluded.
(3) Total Recycled Content = Postconsumer Content + Preconsumer Content.
(4) LEED-Eligible Recycled Content = Postconsumer + ½ Preconsumer Content (per LEED Standard). Recycled content value is determined by weight.

MULE-HIDE DRILL POINT FASTENERS

ADDITIONAL INFORMATION

The information given on this PDS is subject to change without notice. Always check the Mule-Hide website at www.mulehide.com for the latest information, changes and updates or contact Mule-Hide Products Company at 800-786-1492.

DISCLAIMER

The statements provided concerning the material shown are intended as a guide for material usage and are believed to be true and accurate at the time of printing. No statement made by anyone may supersede this information, except when done in writing by Mule-Hide Products Co., Inc. Since the manner of use is beyond our control, Mule-Hide does not authorize anyone to make any warranty of merchantability or fitness for any particular purpose or any other warranty, guarantee or representation, expressed or implied, concerning this material. This product may be eligible for a Mule-Hide warranty, please check the Mule-Hide website at www.mulehide.com or contact Mule-Hide directly at 800-786-1492 for details. Buyer and user accept the product under these conditions and assume the risk of any failure, any injury person or property (including that of the user), loss or liability resulting from the handling, storage or use of the product whether or not it is handled, stored or used in accordance with the directions or specifications. Mule-Hide must be notified in writing of any claims and be given the opportunity to inspect the alleged failure before repairs are made.

Mule-Hide Products Co., Inc.
1195 Prince Hall Dr.
Beloit, WI 53511

MULE-HIDE HDP FASTENERS

PRODUCT DESCRIPTION

Mule-Hide HDP fasteners (Heavy Duty) are # 14 fasteners manufactured from C-1022 heat treated wire. These fasteners incorporate a No. 3 Phillips recess, flat truss head with a #2 double flute self-drilling point. The drill point has an exclusive tapered entry thread design that allows for fastener penetration into steel roof decks and offers exceptional back-out resistance.

BASIC USES

Mule-Hide's HDP Fasteners are designed specifically for the mechanical attachment of Mule-Hide's reinforced EPDM, TPO and PVC membranes and for the mechanical attachment of Poly ISO 1 and Poly ISO 2 roof insulation boards and other FM approved insulation / cover boards into steel, wood and concrete decks. The Mule-Hide HDP Fasteners may be used in conjunction with the Mule-Hide 2.4" Seam Plates, 3" Insulation Plates and All Purpose Bars. Refer to Mule-Hide's appropriate Single-Ply Manuals for installation instructions and uses.

SPECIFICATIONS

Wire:	---	SAE C-1022, heat treated wire
Coating:	---	TRU-Kote PC-3
Corrosion Resistance	FM 4470, DIN 50018	<15% Red Rust after 30 cycles
Tensile Strength	ASTM F606-10	3200 lb.
Shear Strength	NASM 1312-20	2200 lb. (thread zone)

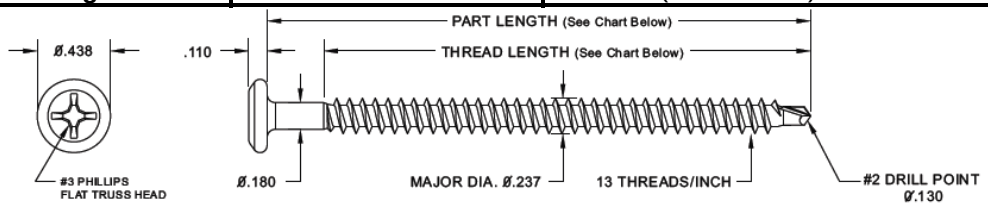

PACKAGING

Screw Length*	Thread Length*	Pieces/Box	Weight/Box
1-1/2"	1-1/2"	1000	12.9 lbs
2"	2"	1000	15.5 lbs
2-1/2"	2-1/2"	1000	19.4 lbs
3"	2-7/8"	1000	23.7 lbs
3-1/2"	2-7/8"	1000	26.4 lbs
4"	3-7/8"	1000	30.9 lbs
4-1/2"	3-7/8"	1000	33.6 lbs
5"	3-7/8"	1000	37.3 lbs
5-1/2"	3-7/8"	1000	40.8 lbs
6"	3-7/8"	1000	44.0 lbs
7"	3-7/8"	500	25.9 lbs
8"	3-7/8"	500	29.7 lbs
9"	3-7/8"	250	16.6 lbs
10"	3-7/8"	250	18.5 lbs
11"	3-7/8"	250	20.1 lbs
12"	3-7/8"	250	22.0 lbs

Notes: Screw Length is ± 1/16"
Thread Length is ± 1/16"

MULE-HIDE HDP FASTENERS

Performance Information

Average Ultimate Pullout Values in Corrugated Steel Deck Substrates													
Thickness	24 ga.	22 ga.			20 ga.			18 ga.			16 ga.		
Strength, ksi	36.5	33.0	80.0	102.0	33.0	80.0	102.0	33.0	80.0	102.0	33.0	80.0	102.0
Pullout (lbs)	255	315	480	560	420	615	710	675	885	985	850	1115	1240

Average Ultimate Pullout Values in Wood Substrates								
Type	APA Rated OSB				APA Rated Plywood			
Thickness	7/16”	15/32”	19/32”	23/32”	15/32”	19/32”	23/32”	SPF #2
Pullout (lbs)	270	290	310	410	360	410	730	795*

*lbf./in. of thread penetration including tip.

Average Ultimate Pullout Values in 3000 psi Concrete	
Pullout (lbf.)	450*

*lbf/in. of thread penetration, including tip.

Pull out values are offered only as a guide and are not guaranteed in any way.
Designated holding powers are dependent upon quality of substrate and accuracy of installation.
Mule-Hide recommends that fastener pull out testing be performed to verify fastener performance.

CODE APPROVALS/COMPLIANCE

Mule-Hide HDP Fasteners comply with the requirements of the following specifications, test and code requirements when properly installed.

* FM Standard 4450/4470 Approval * Metro-Dade Approved *Florida Product Approval

INSTALLATION INSTRUCTIONS

Steel and Wood Decks
Install fasteners with #3 Phillips drive bit provided in box and a variable speed screw gun. Fastener must penetrate the deck a minimum of ¾” as measured from the underside of the roof deck to the fastener tip. Ensure that fastener is installed perpendicular to surface of roof deck. Care should be taken to not overdrive the fastener causing damage to roof insulation, fastener or roof deck.

Concrete Decks
Pre-drill a 3/16” diameter hole using a drill bit that meets ANSI Standard B212.15 requirements and hammer drill. Drill hole a minimum of ½” deeper than fastener embedment and clean debris from hole. Using the #3 Phillips drill bit provided and a 0 to 1500 rpm screw gun, install fastener to a minimum embedment of 1” until fastener head is properly seated in bar or plate. Care should be taken to not overdrive the fastener causing damage to roof insulation, fastener or roof deck.

Use eye protection when installing fasteners.

PROTECTION & SAFETY

Mule-Hide maintains Material Safety Data Sheets on all of its products. Material Safety Data Sheets contain health and safety information for your development of appropriate product handling procedures to protect your employees and customers. Mule-Hide's Material Safety Data Sheets should be read and understood by all of your supervisory personnel and employees before using Mule-Hide products in your facilities.

MULE-HIDE HDP FASTENERS

LEED INFORMATION

Recycled Content

Postconsumer (1)	15%
Preconsumer (2)	10%
Total Recycled Content (3)	25%
LEED – Eligible Recycled Content (4)	20%

(1) Postconsumer material is defined as waste material generated by households or commercial, industrial and institutional facilities in their role as end-users of the product, which can no longer be used for its intended purposes.
(2) Preconsumer material is defined as material diverted from the waste stream during the manufacturing process. Reutilization of materials (i.e. rework, regrind or scrap generated in a process and capable of being reclaimed within the same process that generated it) is excluded.
(3) Total Recycled Content = Postconsumer Content + Preconsumer Content.
(4) LEED-Eligible Recycled Content = Postconsumer + ½ Preconsumer Content (per LEED Standard). Recycled content value is determined by weight.

ADDITIONAL INFORMATION

The information given on this PDS is subject to change without notice. Always check the Mule-Hide website at www.mulehide.com for the latest information, changes and updates or contact Mule-Hide Products Company at 800-786-1492.

DISCLAIMER

The statements provided concerning the material shown are intended as a guide for material usage and are believed to be true and accurate at the time of printing. No statement made by anyone may supersede this information, except when done in writing by Mule-Hide Products Co., Inc. Since the manner of use is beyond our control, Mule-Hide does not authorize anyone to make any warranty of merchantability or fitness for any particular purpose or any other warranty, guarantee or representation, expressed or implied, concerning this material. This product may be eligible for a Mule-Hide warranty, please check the Mule-Hide website at www.mulehide.com or contact Mule-Hide directly at 800-786-1492 for details. Buyer and user accept the product under these conditions and assume the risk of any failure, any injury person or property (including that of the user), loss or liability resulting from the handling, storage or use of the product whether or not it is handled, stored or used in accordance with the directions or specifications. Mule-Hide must be notified in writing of any claims and be given the opportunity to inspect the alleged failure before repairs are made.

Mule-Hide Products Co., Inc.
1195 Prince Hall Dr.
Beloit, WI 53511

PRODUCT DATA SHEET
PDS 09-5230
Revision Date: OCT-2013

MULE-HIDE EHD FASTENERS

PRODUCT DESCRIPTION

Mule-Hide EHD fasteners (Extra Heavy Duty) are # 15 fasteners manufactured from C-1022 heat treated wire. These fasteners incorporate a No. 3 Phillips recess, flat truss head with a #2 double flute self-drilling point. The drill point has an exclusive tapered entry thread design that allows for fastener penetration into steel roof decks and offers exceptional back-out resistance.

BASIC USES

Mule-Hide's EHD Fasteners are designed specifically for the mechanical attachment of Mule-Hide's reinforced EPDM, TPO and PVC membranes in steel and wood roof decks. Mule-Hide EHD fasteners can also be used for the mechanical attachment of Poly ISO 1 and Poly ISO 2 roof insulation boards and other FM approved insulation / cover boards. The Mule-Hide EHD Fasteners may be used in conjunction with the Mule-Hide 2.4" Seam Plates, 3" Insulation Plates and All Purpose Bars. Refer to Mule-Hide's appropriate Single-Ply Manuals for installation instructions and uses.

SPECIFICATIONS

Wire:	---	SAE C-1022, heat treated wire
Coating:	---	TRU-Kote PC-3
Corrosion Resistance	FM 4470, DIN 50018	<15% Red Rust after 30 cycles
Tensile Strength	ASTM F606-10	4200 lb.
Shear Strength	NASM 1312-20	2400 lb. (thread zone)

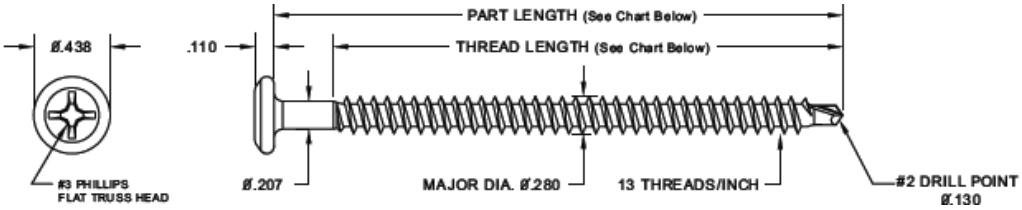

PACKAGING

Screw Length*	Thread Length*	Pieces/Box	Weight/Box
1-1/4"	1-1/4"	1000	12.6 lbs
2"	2"	1000	19.5 lbs
3"	3"	1000	28.2 lbs
4"	3"	1000	37.8 lbs
5"	4"	1000	48.1 lbs
6"	4"	500	27.9 lbs
7	4"	500	33.6 lbs
8"	4"	500	37.3 lbs
9"	4"	250	20.7 lbs
10	4"	250	23.7 lbs
11"	4"	250	25.3 lbs
12"	4"	250	28.9 lbs
14"	4"	250	33.1 lbs
16"	4"	250	36.9 lbs
18"	4"	250	41.7 lbs
20"	4"	250	46.7 lbs
22"	4"	250	51.1lbs
24"	4"	250	56.1 lbs
Screw Length and Thread Length is ± 1/16"			

MULE-HIDE EHD FASTENERS

Performance Information

Average Ultimate Pullout Values in Corrugated Steel Deck Substrates													
Thickness	24 ga.	22 ga.			20 ga.			18 ga.			16 ga.		
Strength, ksi	36.5	33.0	80.0	102.0	33.0	80.0	102.0	33.0	80.0	102.0	33.0	80.0	102.0
Pullout (lbs)	390	465	695	805	605	855	970	925	1125	1215	1175	1370	1460

Average Ultimate Pullout Values in Wood Substrates								
Type	APA Rated OSB				APA Rated Plywood			
Thickness	7/16”	15/32”	19/32”	23/32”	15/32”	19/32”	23/32”	SPF #2
Pullout (lbs)	295	300	310	515	400	525	685	1165*

*lbf./in. of thread penetration including tip.

Pull out values are offered only as a guide and are not guaranteed in any way.
Designated holding powers are dependent upon quality of substrate and accuracy of installation.
Mule-Hide recommends that fastener pull out testing be performed to verify fastener performance.

CODE APPROVALS/COMPLIANCE

Mule-Hide EHD Fasteners comply with the requirements of the following specifications, test and code requirements when properly installed.

* FM Standard 4450/4470 Approval * Metro-Dade Approved *Florida Product Approval

INSTALLATION INSTRUCTIONS

Steel and Wood Decks

Install fasteners with #3 Phillips drive bit provided in box and a variable speed screw gun. Fastener must penetrate the deck a minimum of ¾” as measured from the underside of the roof deck to the fastener tip. Ensure that fastener is installed perpendicular to surface of roof deck. Care should be taken to not overdrive the fastener causing damage to roof insulation, fastener or roof deck. **Use eye protection when installing fasteners.**

LEED INFORMATION

Recycled Content

Postconsumer (1)	15%
Preconsumer (2)	10%
Total Recycled Content (3)	25%
LEED – Eligible Recycled Content (4)	20%

(1) Postconsumer material is defined as waste material generated by households or commercial, industrial and institutional facilities in their role as end-users of the product, which can no longer be used for its intended purposes.
(2) Preconsumer material is defined as material diverted from the waste stream during the manufacturing process. Reutilization of materials (i.e. rework, regrind or scrap generated in a process and capable of being reclaimed within the same process that generated it) is excluded.
(3) Total Recycled Content = Postconsumer Content + Preconsumer Content.
(4) LEED-Eligible Recycled Content = Postconsumer + ½ Preconsumer Content (per LEED Standard). Recycled content value is determined by weight.

MULE-HIDE EHD FASTENERS

PROTECTION & SAFETY

Mule-Hide maintains Material Safety Data Sheets on all of its products. Material Safety Data Sheets contain health and safety information for your development of appropriate product handling procedures to protect your employees and customers. Mule-Hide's Material Safety Data Sheets should be read and understood by all of your supervisory personnel and employees before using Mule-Hide products in your facilities.

ADDITIONAL INFORMATION

The information given on this PDS is subject to change without notice. Always check the Mule-Hide website at www.mulehide.com for the latest information, changes and updates or contact Mule-Hide Products Company at 800-786-1492.

DISCLAIMER

The statements provided concerning the material shown are intended as a guide for material usage and are believed to be true and accurate at the time of printing. No statement made by anyone may supersede this information, except when done in writing by Mule-Hide Products Co., Inc. Since the manner of use is beyond our control, Mule-Hide does not authorize anyone to make any warranty of merchantability or fitness for any particular purpose or any other warranty, guarantee or representation, expressed or implied, concerning this material. This product may be eligible for a Mule-Hide warranty, please check the Mule-Hide website at www.mulehide.com or contact Mule-Hide directly at 800-786-1492 for details. Buyer and user accept the product under these conditions and assume the risk of any failure, any injury person or property (including that of the user), loss or liability resulting from the handling, storage or use of the product whether or not it is handled, stored or used in accordance with the directions or specifications. Mule-Hide must be notified in writing of any claims and be given the opportunity to inspect the alleged failure before repairs are made.

Mule-Hide Products Co., Inc.
1195 Prince Hall Dr.
Beloit, WI 53511

PRODUCT DATA SHEET
PDS 09-6105
Revision Date: OCT-2013

MULE-HIDE ALL PURPOSE BAR

PRODUCT DESCRIPTION

Mule-Hide's All Purpose Bar is a specially extruded aluminum bar without sharp edges.

BASIC USES

Mule-Hide's All Purpose Bar is designed for use as an anchor bar for attachment of the Mule-Hide EPDM membranes. The All Purpose Bar may be installed in the field seam as a batten bar and used at the base of curbs, parapet walls and angle changes as an anchor bar. The All Purpose Bar may also be used with any of the Mule-Hide single-ply membranes as a termination bar. Refer to the Mule-Hide Single-Ply Manuals for specific use and installation instructions.

SPECIFICATIONS

Material: Extruded Aluminum
Dimensions: .050" thick x 1" wide x 10' long per piece.
Holes: 1/4" x 3/8" slotted holes on 6 inch centers.

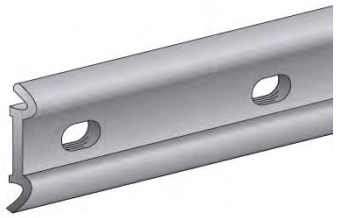

PACKAGING

Packaged: 50 pieces per tube
Approx. shipping weight: 45 lbs per tube

INSTALLATION INSTRUCTIONS

Position Mule-Hide All Purpose Bar as per detail drawings (ribs facing outward or ribs facing inward)
When used as edge termination, ensure that water block sealant has been installed as per appropriate detail drawing, position bar with ribs facing substrate (to form sealant pocket) and attach with appropriate fastener into substrate. When used for base attachment (see appropriate detail) position All Purpose Bar with ribs facing outward and attach with appropriate fastener into substrate.

LEED INFORMATION

Recycled Content

Postconsumer (1)	12%
Preconsumer (2)	32%
Total Recycled Content (3)	44%
LEED – Eligible Recycled Content (4)	28%

(1) Postconsumer material is defined as waste material generated by households or commercial, industrial and institutional facilities in their role as end-users of the product, which can no longer be used for its intended purposes.
(2) Preconsumer material is defined as material diverted from the waste stream during the manufacturing process. Reutilization of materials (i.e. rework, regrind or scrap generated in a process and capable of being reclaimed within the same process that generated it) is excluded.
(3) Total Recycled Content = Postconsumer Content + Preconsumer Content.
(4) LEED-Eligible Recycled Content = Postconsumer + ½ Preconsumer Content (per LEED Standard). Recycled content value is determined by weight.

MULE-HIDE ALL PURPOSE BAR

PROTECTION & SAFETY

Mule-Hide maintains Material Safety Data Sheets on all of its products. Material Safety Data Sheets contain health and safety information for your development of appropriate product handling procedures to protect your employees and customers. Mule-Hide's Material Safety Data Sheets should be read and understood by all of your supervisory personnel and employees before using Mule-Hide products in your facilities.

ADDITIONAL INFORMATION

The information given on this PDS is subject to change without notice. Always check the Mule-Hide website at www.mulehide.com for the latest information, changes and updates or contact Mule-Hide Products Company at 800-786-1492.

DISCLAIMER

The statements provided concerning the material shown are intended as a guide for material usage and are believed to be true and accurate at the time of printing. No statement made by anyone may supersede this information, except when done in writing by Mule-Hide Products Co., Inc. Since the manner of use is beyond our control, Mule-Hide does not authorize anyone to make any warranty of merchantability or fitness for any particular purpose or any other warranty, guarantee or representation, expressed or implied, concerning this material. This product may be eligible for a Mule-Hide warranty, please check the Mule-Hide website at www.mulehide.com or contact Mule-Hide directly at 800-786-1492 for details. Buyer and user accept the product under these conditions and assume the risk of any failure, any injury person or property (including that of the user), loss or liability resulting from the handling, storage or use of the product whether or not it is handled, stored or used in accordance with the directions or specifications. Mule-Hide must be notified in writing of any claims and be given the opportunity to inspect the alleged failure before repairs are made.

Mule-Hide Products Co., Inc.
1195 Prince Hall Dr.
Beloit, WI 53511

MULE-HIDE POLY ISO 1™ ROOF INSULATION

PRODUCT DESCRIPTION

The Mule-Hide Poly ISO 1 polyisocyanurate insulation (flat or tapered) is a closed-cell polyisocyanurate foam core laminated to heavy, black (non-asphaltic) glass fiber reinforced felt facers. The Mule-Hide Poly ISO 1 is compatible with all Mule-Hide membranes and accessories. Available in 20 psi and 25 psi.

BASIC USES

The Mule-Hide Poly ISO 1 insulation board may be used for ballasted, mechanically attached and fully adhered single-ply roofing systems. The Poly ISO 1 insulation board may be installed over approved decks and substrates on new construction, tearoffs, and recover (retrofit) projects. The Poly ISO 1 insulation board may be used in UL Class A and FM Class 1 assemblies.

TYPICAL PHYSICAL PROPERTIES

Property	Test Method	Typical Results
Dimensional Stability	ASTM D-2126	Less than 2% Linear Change
Compressive Strength	ASTM D-1621	20 PSI (Grade 2) 25 PSI (Grade3)
Water Absorption	ASTM D-209	Less than 1% By Volume
Moisture Vapor Transmission	ASTM E-96	Less than One (1) Perm
Service Temperature	---	-100°F to 250°F Max
*The physical properties above are presented as typical average values as determined by accepted ASTM test methods and are subject to change. All information can be confirmed by contacting Mule-Hide Products.		

Poly ISO 1				
Nominal Thickness** (Inches)	(mm)	LTTR R-Value (revised Jan-2014)	C-Value	Metal Deck Max. Flute Spanability (Inches)
1.0	25	5.6	.178	2 ⅝
1.5	38	8.5	.118	4 ⅜
1.6	41	9.1	.110	4 ⅜
1.7	43	9.6	.104	4 ⅜
2.0	51	11.4	.088	4 ⅜
2.5	64	14.4	.069	4 ⅜
2.7	69	15.6	.064	4 ⅜
3.0	76	17.4	.057	4 ⅜
3.3	84	19.2	.052	4 ⅜
3.5	89	20.5	.049	4 ⅜
3.6	91	21.1	.047	4 ⅜
4.0	102	23.6	.042	4 ⅜
*Long Term Thermal Resistance Values are based on ASTM C1289 (revised Jan-2014) and CAN/ULC S770 which provides for a 15-year time weighted average. **Other thicknesses available upon special request.				

MULE-HIDE POLY ISO 1™ ROOF INSULATION

LTTR Value	**ASTM C1289-11** (revised Jan-2014)
20	2 layers of 1.8” Poly ISO 2
25	2 layers of 2.2” Poly ISO 2
30	2 layers of 2.6” Poly ISO 2
35	2 layers of 3.1” Poly ISO 2
40	2 layers of 3.5” Poly ISO 2

Poly ISO 1 Recycle Content
Between 16% and 43% by weight, depending upon thickness (55% post consumer and 45% post industrial). Refer to LEED Memo for Mule-Hide Products.

PACKAGING

Factory applied packaging is only intended for protection during transit. When stored outside or at the job site, the insulation must be stored at least 4" above ground level and completely covered with a weatherproof covering such as a tarpaulin. **Warning - Do Not Leave Exposed:** This product will burn if exposed to an ignition source of sufficient heat and intensity, or an open flame.

CODE APPROVALS/COMPLIANCE

Poly ISO 1 complies with the requirements of the following specifications, test and code requirements when properly installed.

* Federal Specification HH-I-1972/GEN and HH-I-1972/2, Class 1
* ASTM C 1289-05a, Type II, Class 1, Grade 2 (20 psi), Grade 3 (25 psi)
* FM Standard 4450/4470 Approval, Class 1
* UL Standard 1256 Classification
* UL Standard 790 Classification
* UL Standard 263 Fire Resistance Classification

Mule-Hide Poly ISo 1 is manufactured with NexGen Chemistry™ – Zero ODP, CFC Free, EPA Compliant.

INSTALLATION INSTRUCTIONS

Ballasted Single-Ply Membrane Systems - Mule-Hide Poly ISO 1 does not require attachment to the deck in this system. All boards must be tightly fitted together to prevent movement, separation or damage during the installation of the membrane system. All gaps greater than 1/4" must be filled. After the membrane is installed, sufficient amounts of ballast must be applied to prevent membrane and insulation movement. Refer to the Mule-Hide Manual and FM Loss Prevention Data Sheet 1-29 for information regarding ballasting guidelines.

Mechanically Attached Single-Ply Membrane Systems - Mule-Hide Poly ISO 1 should be attached with Mule-Hide fasteners and insulation plates (or FM Approved fasteners) using a minimum of 4 fasteners per 4'x 4' board (1 fastener per 4 square feet) and a minimum of 6 fasteners per 4'x 8' board (1 fastener per 5.33 square feet). Refer to the Mule-Hide Manual for proper fastener placement.

Fully Adhered Single-Ply Membrane Systems - Mule-Hide Poly ISO 1 should be installed with the perforated side down. Insulation attachment will vary depending upon insulation thickness and job requirements. If the top layer is less than 2” thick, install a minimum of 8 fasteners per 4'x 4' board (1 fastener per 2 square feet) and a minimum of 16 fasteners per 4'x 8' board (1 fastener per 2 square feet). If the top layer is 2” thick or thicker, install 4 fasteners per 4’ x 4’ or 8 fasteners per 4’ x 8’ insulation board. Refer to the Mule-Hide Manual for proper fastener density and placement. Additional fastening may be required for certain job conditions.

MULE-HIDE POLY ISO 1™ ROOF INSULATION

Fully Adhered Single-Ply Membrane Systems - continued
In some instances hot steep asphalt or insulation adhesive may be used to attach the Mule-Hide Poly ISO 2™ to approved concrete decks. Only 4'x 4' boards may be used. Contact Mule-Hide's Technical Department for specific requirements and procedures.

PROTECTION & SAFETY

Mule-Hide maintains Material Safety Data Sheets on all of its products. Material Safety Data Sheets contain health and safety information for your development of appropriate product handling procedures to protect your employees and customers. Mule-Hide's Material Safety Data Sheets should be read and understood by all of your supervisory personnel and employees before using Mule-Hide products in your facilities.

ADDITIONAL INFORMATION

The information given on this PDS is subject to change without notice. Always check the Mule-Hide website at www.mulehide.com for the latest information, changes and updates or contact Mule-Hide Products Company at 800-786-1492.

DISCLAIMER

The statements provided concerning the material shown are intended as a guide for material usage and are believed to be true and accurate at the time of printing. No statement made by anyone may supersede this information, except when done in writing by Mule-Hide Products Co., Inc. Since the manner of use is beyond our control, Mule-Hide does not authorize anyone to make any warranty of merchantability or fitness for any particular purpose or any other warranty, guarantee or representation, expressed or implied, concerning this material. This product may be eligible for a Mule-Hide warranty, please check the Mule-Hide website at www.mulehide.com or contact Mule-Hide directly at 800-786-1492 for details. Buyer and user accept the product under these conditions and assume the risk of any failure, any injury person or property (including that of the user), loss or liability resulting from the handling, storage or use of the product whether or not it is handled, stored or used in accordance with the directions or specifications. Mule-Hide must be notified in writing of any claims and be given the opportunity to inspect the alleged failure before repairs are made.

Mule-Hide Products Co., Inc.
1195 Prince Hall Dr.
Beloit, WI 53511

PRODUCT DATA SHEET
PDS 09-6215
Revision Date: Jan 2014

MULE-HIDE Poly ISO 2™ ROOF INSULATION

PRODUCT DESCRIPTION

The Mule-Hide Poly ISO 2™ polyisocyanurate insulation (flat or tapered) is a closed-cell polyisocyanurate foam core laminated to heavy, black (non-asphaltic) glass fiber reinforced felt facers. The Mule-Hide Poly ISO 2™ is compatible with all Mule-Hide membranes and accessories. Available in 20 and 25 psi densities.

BASIC USES

Mule-Hide Poly ISO 2™ insulation board may be used for ballasted, mechanically attached and fully adhered single-ply roofing systems. Poly ISO 2™ insulation board may be installed over approved decks and substrates on new construction, tearoffs, and recover (retrofit) projects. Rated for use in UL Class A and FM Class 1 assemblies.

TYPICAL PHYSICAL PROPERTIES

Property	Test Method	Typical Results
Dimensional Stability	ASTM D-2126	Less than 2% Linear Change
Compressive Strength	ASTM D-1621 (10% deformation)	20 PSI or 25 PSI
Water Absorption	ASTM C-209, ASTM D-2842	< 1%, < 3.5%
Moisture Vapor Transmission	ASTM E-96	Less than One (1) Perm
Product Density	ASTM D-1622	Nominal 2.0 lbs per cubic foot
Flame Spread (foam core)	ASTM E-84 (full 10 min. test)	40 to 60*
Smoke Developed	ASTM E-84 (full 10 min. test)	50 to 170*
Service Temperature	---	-40°F to 200°F Max**
Tensile Strength	ASTM D-1623	>730 psf (35 kPa)

* The numerical ratings are determined by ASTM Test Method E-84 are not intended to reflect hazards presented by this or any other material under actual fire conditions. A flame spread index of 75 or less and smoke development of 450 or less meet code requirements regarding flame spread and smoke development for foam plastic roof insulation. However, the codes exempt foam plastic insulation when used in roof deck constructions that comply as an assembly with FM 4450 or UL 1256 (see IBC, NBC, UBC and SBS Sections on Foam Plastic Insulation (Chapter 26). Smoke development does not apply to roofing.
**ASTM C1289 Standard Specification for Faced Rigid Cellular Polyisocyanurate Thermal Insulation.
The physical properties above are presented as typical average values as determined by accepted ASTM test methods and are subject normal manufacturing variation.

Nominal Thickness** (Inches)	**Poly ISO 2™**			Metal Deck Max. Flute Spanability (Inches)
	(mm)	LTTR R-Value (revised Jan-2014)	C-Value	
1.0	25.4	5.6	.178	2 ⅝
1.5	38.1	8.5	.118	4 ⅜
2.0	50.8	11.4	.088	4 ⅜
2.5	63.5	14.4	.069	4 ⅜
3.0	76.2	17.4	.057	4 ⅜
3.1	78.7	18.0	.055	4 ⅜
3.5	88.9	20.5	.049	4 ⅜
4.0	101.6	23.6	.042	4 ⅜

*LTTR (Long Term Thermal Resistance) values were determined in accordance with CAN/ULC-S770 and ASTM C1289 (Revised Jan-2014), Annex A1. All test samples were third-party selected and tested by an accredited material testing laboratory. The LTTR results were reviewed and authorized by FM Approvals and certified by the PIMA Quality Mark Program.
**Other thicknesses available upon special request.

MULE-HIDE Poly ISO 2™ ROOF INSULATION

LTTR Value	**ASTM C1289-11** (revised Jan-2014)
20	2 layers of 1.8” Poly ISO 2
25	2 layers of 2.2” Poly ISO 2
30	2 layers of 2.6” Poly ISO 2
35	2 layers of 3.1” Poly ISO 2
40	2 layers of 3.5” Poly ISO 2

Poly ISO 2 Recycle Content

Between 16% and 43% by weight, depending upon thickness (55% post consumer and 45% post industrial). Refer to LEED Memo for Mule-Hide Products.

PACKAGING

Factory applied packaging is only intended for protection during transit. When stored outside or at the job site, the insulation must be stored at least 4" above ground level and completely covered with a weatherproof covering such as a tarpaulin. **Warning - Do Not Leave Exposed:** This product will burn if exposed to an ignition source of sufficient heat and intensity, or an open flame.

CODE APPROVALS/COMPLIANCE

Poly ISO 2™ complies with the requirements of the following specifications, test and code requirements when properly installed.

* Federal Specification HH-I-1972/GEN and HH-I-1972/2, Class 1 (have been cancelled)
* ASTM C 1289, Type II, Class 1, Grade 2 (20 psi) or Grade 3 (25 psi)
* FM Standard 4450/4470 Approval, Class 1
* UL Standard 1256 Classification
* UL Standard 790 Classification
* UL Standard 263 Fire Resistance Classification

Mule-Hide Poly ISO 2™ is manufactured using CFC-, HCFC-, and HFC-free foam blowing technology with zero ozone depletion potential (ODP) and zero (negligible) global warming potential (GWP).

INSTALLATION INSTRUCTIONS

Ballasted Single-Ply Membrane Systems - Mule-Hide Poly ISO 2™ does not require attachment to the deck in this system. All boards must be tightly fitted together to prevent movement, separation or damage during the installation of the membrane system. All gaps greater than 1/4" must be filled. After the membrane is installed, sufficient amounts of ballast must be applied to prevent membrane and insulation movement. Refer to the Mule-Hide Manual and FM Loss Prevention Data Sheet 1-29 for information regarding ballasting guidelines.

Mechanically Attached Single-Ply Membrane Systems - Mule-Hide Poly ISO 2™ should be attached with Mule-Hide fasteners and insulation plates (or FM Approved fasteners) using a minimum of 4 fasteners per 4'x 4' board (1 fastener per 4 square feet) and a minimum of 6 fasteners per 4'x 8' board (1 fastener per 5.33 square feet). Refer to the Mule-Hide Manual for proper fastener placement.

Fully Adhered Single-Ply Membrane Systems - Mule-Hide Poly ISO 2™ should be installed with the perforated side down. Insulation attachment will vary depending upon insulation thickness and job requirements. If the top layer is less than 2” thick, install a minimum of 8 fasteners per 4'x 4' board (1 fastener per 2 square feet) and a minimum of 16 fasteners per 4'x 8' board (1 fastener per 2 square feet). If the top layer is 2” thick or thicker, install 4 fasteners per 4’ x 4’ or 8 fasteners per 4’ x 8’ insulation board. Refer to the Mule-Hide Manual for proper fastener density and placement. Additional fastening may be required for certain job conditions.

In some instances hot steep asphalt or insulation adhesive may be used to attach the Mule-Hide Poly ISO 2™ to approved concrete decks. Only 4'x 4' boards may be used. Contact Mule-Hide's Technical Department for specific requirements and procedures.

MULE-HIDE Poly ISO 2™ ROOF INSULATION

PROTECTION & SAFETY

Mule-Hide maintains Material Safety Data Sheets on all of its products. Material Safety Data Sheets contain health and safety information for your development of appropriate product handling procedures to protect your employees and customers. Mule-Hide's Material Safety Data Sheets should be read and understood by all of your supervisory personnel and employees before using Mule-Hide products in your facilities.

ADDITIONAL INFORMATION

The information given on this PDS is subject to change without notice. Always check the Mule-Hide website at www.mulehide.com for the latest information, changes and updates or contact Mule-Hide Products Company at 800-786-1492.

DISCLAIMER

The statements provided concerning the material shown are intended as a guide for material usage and are believed to be true and accurate at the time of printing. No statement made by anyone may supersede this information, except when done in writing by Mule-Hide Products Co., Inc. Since the manner of use is beyond our control, Mule-Hide does not authorize anyone to make any warranty of merchantability or fitness for any particular purpose or any other warranty, guarantee or representation, expressed or implied, concerning this material. This product may be eligible for a Mule-Hide warranty, please check the Mule-Hide website at www.mulehide.com or contact Mule-Hide directly at 800-786-1492 for details. Buyer and user accept the product under these conditions and assume the risk of any failure, any injury person or property (including that of the user), loss or liability resulting from the handling, storage or use of the product whether or not it is handled, stored or used in accordance with the directions or specifications. Mule-Hide must be notified in writing of any claims and be given the opportunity to inspect the alleged failure before repairs are made.

Mule-Hide Products Co., Inc.
1195 Prince Hall Dr.
Beloit, WI 53511

PRODUCT DATA SHEET
PDS 09-6220
Revision Date: Jan 2012

MULE-HIDE POLY ISO 1-HD (Cover Board)

PRODUCT DESCRIPTION

Mule-Hide Poly ISO 1-HD is ½" thick, high density polyisocyanurate insulation board that was specifically designed for use as a cover board. This product consists of a closed-cell polyisocyanurate foam core laminated to premium performance coated glass fiber felt facers. Mule-Hide Poly ISO 1-HD is compatible with all Mule-Hide membranes and accessories. In addition to providing a durable underlayment roofing membranes, Poly ISO HD-1 has a R-value of 2.5 which is significantly higher than that of other cover board products such as woodfiber or gypsum.

BASIC USES

Mule-Hide Poly ISO 1-HD is designed for use as a cover board over roof insulation boards or existing membranes. It is compatible with Single-Ply roofing systems (ballasted, mechanically attached and fully adhered) and Modified Bitumen Roofing Systems, on new construction, tearoff, and recover (retrofit) projects. Suitable for use with approved fasteners and plates, and low-rise adhesive. Poly ISO 1-HD can achieve a FM hail resistance rating of SH-1 with certain membranes.

TYPICAL PHYSICAL PROPERTIES (polyisocyanurate foam core only)

Property	Test Method	Typical Results
Dimensional Stability	ASTM D-2126	Less than 0.5% Linear Change
Compressive Strength	ASTM D-1621	>100 psi
Water Absorption	ASTM D-209	Less than 1% By Volume
Resistance to Mold	ASTM D-3273	Passed (10)
Service Temperature	---	260°F or less
Recycled Content	---	>8%
R-Value @ ½" (13 mm)	ASTM C-518	2.5
*The physical properties above are presented as typical average values as determined by accepted ASTM test methods and are subject to change. All information can be confirmed by contacting Mule-Hide Products.		

PACKAGING

PACKAGING & WEIGHT		
Weight	11 lbs. per 4' x 8' panel	0.3431 lbs / sq. ft.
Packaging	96 pieces per bundle	

Factory applied packaging is only intended for protection during transit. When stored outside or at the job site, the insulation must be stored at least 4" above ground level and completely covered with a weatherproof covering such as a tarpaulin. **Warning - Do Not Leave Exposed:** This product will burn if exposed to an ignition source of sufficient heat and intensity, or an open flame.

CODE APPROVALS/COMPLIANCE

Poly ISO 1-hd complies with the requirements of the following specifications, test and code requirements when properly installed.

* ASTM E-108
*FM Approved – consult RoofNav for specific assemblies
*UL Classified 790

Mule-Hide Poly ISo 1 is manufactured with NexGen Chemistry™ – Zero ODP, CFC Free, EPA Compliant.

MULE-HIDE POLY ISO 1-HD (Cover Board)

INSTALLATION INSTRUCTIONS

General
All boards must be tightly fitted together to prevent movement, separation or damage during the installation of the membrane system. All gaps greater than 1/4" must be filled.

Ballasted Single-Ply Membrane Systems - Mule-Hide Poly ISO 1-HD does not require attachment to the deck in this system. Sufficient amounts of ballast must be applied to prevent membrane and insulation movement. Refer to the Mule-Hide Manual and FM Loss Prevention Data Sheet 1-29 for information regarding ballasting guidelines.

Mechanically Attached Single-Ply Membrane Systems - Mule-Hide Poly ISO 1-HD should be attached with Mule-Hide fasteners and insulation plates (or FM Approved fasteners) using a minimum of 4 fasteners per 4'x 4' board (1 fastener per 4 square feet) and a minimum of 6 fasteners per 4'x 8' board (1 fastener per 5.33 square feet). Refer to the Mule-Hide Manual for proper fastener placement.

Fully Adhered Single-Ply Membrane Systems - Mule-Hide Poly ISO 1-HD should be attached using a minimum of 8 fasteners per 4'x 4' board (1 fastener per 2 square feet) and a minimum of 16 fasteners per 4'x 8' board (1 fastener per 2 square feet). Refer to the Mule-Hide Manual for proper fastener placement.

Attachment - In some instances insulation adhesive may be used to attach the Mule-Hide Poly ISO 1-HD to approved substrates. Only 4'x 4' boards may be used. Contact Mule-Hide's Technical Department for specific requirements and procedures.

PROTECTION & SAFETY

Mule-Hide maintains Material Safety Data Sheets on all of its products. Material Safety Data Sheets contain health and safety information for your development of appropriate product handling procedures to protect your employees and customers. Mule-Hide's Material Safety Data Sheets should be read and understood by all of your supervisory personnel and employees before using Mule-Hide products in your facilities.

ADDITIONAL INFORMATION

The information given on this PDS is subject to change without notice. Always check the Mule-Hide website at www.mulehide.com for the latest information, changes and updates or contact Mule-Hide Products Company at 800-786-1492.

DISCLAIMER

The statements provided concerning the material shown are intended as a guide for material usage and are believed to be true and accurate at the time of printing. No statement made by anyone may supersede this information, except when done in writing by Mule-Hide Products Co., Inc. Since the manner of use is beyond our control, Mule-Hide does not authorize anyone to make any warranty of merchantability or fitness for any particular purpose or any other warranty, guarantee or representation, expressed or implied, concerning this material. This product may be eligible for a Mule-Hide warranty, please check the Mule-Hide website at www.mulehide.com or contact Mule-Hide directly at 800-786-1492 for details. Buyer and user accept the product under these conditions and assume the risk of any failure, any injury person or property (including that of the user), loss or liability resulting from the handling, storage or use of the product whether or not it is handled, stored or used in accordance with the directions or specifications. Mule-Hide must be notified in writing of any claims and be given the opportunity to inspect the alleged failure before repairs are made.

Georgia-Pacific

DensDeck®
Prime Roof Board

Technical Service Hotline 1.800.225.6119 or
www.densdeck.com

Manufacturer

Georgia-Pacific Gypsum
133 Peachtree Street
Atlanta, GA 30303

Georgia-Pacific Canada
2180 Meadowvale Boulevard, Suite 200
Mississauga, ON L5N 5S3

Technical Service Hotline: 1-800-225-6119

Description

DensDeck® Prime Roof Board has been enhanced to provide a broader compatibility and higher performance with roofing adhesives. Face mat enhancements allow adhesives to be applied more uniformly and consistently. In adhered, single ply membrane testing, enhanced DensDeck Prime demonstrated an average of 24% better bond than the original products, when using solvent based adhesives. (Average based on 60 sq.ft./gal coverage rates.)* Choose DensDeck Prime Roof Boards for adhered and self-adhered "peel & stick" roofing systems, as well as hot mopped, cold mastic and torch-applied modified bitumen roofs. Enhanced DensDeck Prime Roof Boards create a stronger and more economical installation by reducing the amounts of mastic or adhesive used and potentially eliminates the field primer. Consult with membrane manufacturer for actual priming requirements.

DensDeck Prime Roof Boards are the first and only fiberglass mat gypsum roof boards with a 90-day weather exposure limited warranty when applied vertically on a parapet wall.** (Limited to 1/2″ and 5/8″ products only.)

Primary Uses

Roof system manufacturers and designers have found DensDeck Prime Roof Board to be compatible with many types of roofing systems, including: modified asphalt, single-ply, metal systems, recover board, as well as an overlayment for polyisocyanurate and polystyrene insulation. DensDeck Prime Roof Board can also be used as a form board for poured gypsum concrete deck in roof applications as well as a substrate for spray foam roofing systems. 1/2″ (12.7 mm) and 5/8″ (15.9 mm) DensDeck Prime Roof Board may also be used in vertical applications as a backer board or liner for the roof side of parapet walls.

DensDeck Prime Roof Board may allow the bonding of cold mastic modified bitumen and torching directly to the surface. *Consult with the system manufacturer for recommendations on this application.*

DensDeck Prime Roof Board is the preferred substrate for vapor retarders.

Standards and Code Approvals

DensDeck Prime Roof Boards are manufactured to meet ASTM C1177 and have the following approvals:

- Florida Product Approved
- Miami-Dade County Product Control Approved

Recommendations and Limitations

DensDeck Prime Roof Boards are manufactured to act with a properly designed roof system following good roofing practices. The actual use of DensDeck Prime Roof Board as a roofing component in any system or assembly is the responsibility of the roofing system's design authority. Consult with the appropriate system manufacturer and/or design authority for system and assembly specifications and instructions on applying other products to DensDeck Prime Roof Board. Georgia-Pacific does not warrant and is not responsible for any systems or assemblies utilizing DensDeck Prime Roof Board or any component in such systems or assemblies other than DensDeck Prime Roof Board.

The need for a separator sheet between the DensDeck Prime Roof Board and the roofing membrane must be determined by the roof membrane manufacturer or roofing system designer.

* Testing was done in accordance with FM approvals 4470, Appendix C: Small Scale Tests, Membrane Delamination Tests for Roofing Membranes and Substrates Using Tensile Loading.

** For complete warranty details, visit www.DensDeck.com. (Limited to 1/2″ and 5/8″ products only.)

Confirm any priming requirements with the membrane manufacturer. When applying solvent-based adhesives or primers, allow sufficient time for the solvent to flash off to avoid damage to roofing components.

DensDeck Prime Roof Boards should not be subjected to abnormal or excessive loads or foot traffic, such as, but not limited to, use on plaza decks or under steel-wheeled equipment that may fracture or damage the panels. Provide suitable roofing system protection when required.

When using DensDeck Prime Roof Boards for hot-mopped applications, Georgia-Pacific recommends maximum asphalt application temperatures for Type III asphalt of 425°F (218°C) to 450°F (232°C). Application temperatures above these recommended temperatures may adversely affect roof system performance. For application temperatures in excess of 450°F (232°C) and for mopping of type IV asphalt, ribbon or spot mopping or the installation of a perforated base sheet are recommended methods of bonding asphalt in lieu of full mopping. Consult and follow the roofing system manufacturer's specifications for full mopping applications and temperature requirements.

When using DensDeck Prime Roof Board as a substrate for torch applications, ensure that the product is dry and that the proper torching technique is used. Limit the heat to the DensDeck Prime Roof Board. Maintain a majority of the torch flame directly on the roll.

Conditions beyond the control of Georgia-Pacific, such as weather conditions, dew, leaks, application temperatures and techniques may cause adverse effects with roofing systems.

Handling and Use–CAUTION

This product contains fiberglass facings which may cause skin irritation. Dust and fibers produced during the handling and installation of the product may cause skin, eye and respiratory tract irritation. Avoid breathing dust and minimize contact with skin and eyes. Wear long sleeve shirts, long pants and eye protection. Always maintain adequate ventilation. Use a dust mask or NIOSH/MSHA approved respirator as appropriate in dusty or poorly ventilated areas.

Moisture Management

DensDeck Prime Roof Boards, like other components used in roofing systems, must be protected from exposure to moisture before, during and after installation.

Remove the plastic packaging from all DensDeck Prime Roof Board immediately upon receipt of delivery. Failure to remove the plastic packaging may result in entrapment of condensation or moisture. DensDeck Prime Roof Board stored outside must be stored level and off the ground and protected by a breathable waterproof covering. Provide means for air circulation around and under stored bundles of DensDeck Prime Roof Board. DensDeck Prime Roof Board must be covered the same day as installed.

Avoid application of DensDeck Prime Roof Boards during rain, heavy fog and any other conditions that may deposit moisture on the surface, and avoid the overuse of non-vented, direct-fired heaters during winter months. When roofing systems are installed on new poured concrete or light weight concrete decks or when re-roofing over an existing concrete deck, a vapor barrier should be installed above the concrete to retard the migration of water from the concrete into the roof assembly. Always consult the roofing system manufacturer or design authority for specific instructions for applying other products to DensDeck Prime Roof Boards.

Moisture vapor movement by convection must be eliminated, and the flow of water by gravity through imperfections in the roof system must be controlled. After a leak has occurred, no condensation on the upper surface of the system should be tolerated, and the water introduced by the leak must be dissipated to the building interior in a minimum amount of time.

Although DensDeck Prime Roof Boards are engineered with fiberglass facings and high density gypsum cores, the presence of free moisture can have a detrimental

continued →

Submittal Approvals

Job Name _____

Contractor _____

Date _____

Stamps / Signatures

effect on the performance of the product and the installation of roofing membranes. For example, hot asphalt applications can blister; torched modified bitumen may not properly bond; and adhesives for single ply membranes may not dry properly. Moisture accumulation may also significantly decrease wind uplift and vertical pull resistance in the system or assembly. DensDeck® Prime Roof Boards containing excessive free moisture content may need to be evaluated for structural stability to assure wind uplift performance.

Fire Resistance Classifications

DensDeck Prime Roof Boards are excellent fire barriers over combustible and noncombustible roof decks, including steel decks.

UL 790 Classification. DensDeck Prime Roof Boards have been classified by Underwriters Laboratories LLC (UL) for use as a fire barrier over combustible and noncombustible decks in accordance with the ANSI/UL 790 test standard. The UL classification includes a comprehensive Class A, B or C rating. For additional information concerning the UL 790 classification, consult the UL Certification Directory.

UL 1256 Classification. DensDeck Prime Roof Boards have also been classified by UL in roof deck constructions for internal (under deck) fire exposure in accordance with the ANSI/UL 1256 Steiner Tunnel test. For additional information concerning the UL 1256 classification, consult the UL Certification Directory.

FM Class 1 Approvals. DensDeck Prime Roof Boards are included in numerous roofing assemblies with a Factory Mutual (FM) Class 1 fire rating. 1/4″ (6.4 mm) DensDeck Prime Roof Boards have passed testing under the FM Calorimeter Standard 4450 and have been approved by FM as such for insulated steel deck roofs when installed according to the conditions identified by FM. For more information concerning FM Approvals and FM Class 1 assemblies with DensDeck Prime Roof Boards, consult FM or RoofNav®.

Type X. 5/8″ (15.9 mm) DensDeck® Prime Fireguard® Roof Boards are manufactured to meet the "Type X" requirements of ASTM C1177 for increased fire resistance beyond regular gypsum board.

UL Fire Resistance Ratings. 5/8″ (15.9 mm) DensDeck Prime Fireguard Roof Boards are designated as **Type DD** by UL and included in assembly designs investigated by UL for hourly fire resistance ratings. 5/8″ (15.9 mm) DensDeck Prime Fireguard Roof Boards may also replace any unclassified 5/8″ (15.9 mm) gypsum board in an assembly in the UL Fire Resistance Directory under the prefix "P".

Flame Spread and Smoke Developed. When tested in accordance with ASTM E84, DensDeck Prime Roof Boards had Flame Spread 0, Smoke Developed 0.

Wind Uplift

DensDeck Prime Roof Boards are included in numerous assemblies evaluated by FM or other independent laboratories for wind uplift performance. For information concerning such assemblies, please visit www.roofnav.com.

Physical Properties

Properties	1/4″ (6.4 mm)	1/2″ (12.7mm)	5/8″ (15.9 mm)
Thickness, nominal	1/4″ (6.4 mm) ± 1/16″ (1.6 mm)	1/2″ (12.7 mm) ± 1/32″ (.8 mm)	5/8″ (15.9 mm) ± 1/32″ (.8 mm)
Width, standard	4′ (1219 mm) ± 1/8″ (3 mm)	4′ (1219 mm) ± 1/8″ (3 mm)	4′ (1219 mm) ± 1/8″ (3 mm)
Length, standard	4′ (1219 mm) and 8′ (2438 mm) ± 1/4″ (6.4 mm)	4′ (1219 mm) and 8′ (2438 mm) ± 1/4″ (6.4 mm)	4′ (1219 mm) and 8′ (2438 mm) ± 1/4″ (6.4 mm)
Weight, nominal, lbs./sq. ft. (Kg/m^2)	1.2 (5.9)	2.0 (9.8)	2.5 (12.2)
Surfacing	Fiberglass mat with non-asphaltic coating	Fiberglass mat with non-asphaltic coating	Fiberglass mat with non-asphaltic coating
Flexural Strength[1], parallel, lbf. min. (N)	≥40 (178)	≥80 (356)	≥100 (444)
Flute Spanability[2]	2-5/8″ (66.7 mm)	5″ (127 mm)	8″ (203 mm)
Permeance[3], Perms (ng/Pa•S•m^2)	>30 (>1710)	>23 (>1300)	>17 (>970)
R Value[4], ft^2•°F•hr/BTU (m^2•K/W)	.28	.56	.67
Linear Variation with Change in Temp., in/in °F (mm/mm/C°)	8.5 x 10^{-6} (15.3 x 10^{-6})	8.5 x 10^{-6} (15.3 x 10^{-6})	8.5 x 10^{-6} (15.3 x 10^{-6})
Linear Variation with Change in Moisture	6.25 x 10^{-6}	6.25 x 10^{-6}	6.25 x 10^{-6}
Water Absorption[5], % max	<10	<10	<10
Compressive Strength[6], psi nominal	900	900	900
Surface Water Absorption, grams, nominal	<2.0	<2.0	<2.0
Flame Spread, Smoke Developed (ASTM E84)	0/0	0/0	0/0
Bending Radius	4′ (1219 mm)	6′ (1829 mm)	8′ (2438 mm)

1. Tested in accordance with ASTM C473 method B.
2. Tested in accordance with ASTM E661.
3. Tested in accordance with ASTM E96 (dry cup method).
4. Tested in accordance with ASTM C518 (heat flow meter).
5. Specified values per ASTM C1177.
6. Tested in accordance with ASTM C473.

Georgia-Pacific Gypsum

U.S.A. Georgia-Pacific Gypsum LLC
Georgia-Pacific Gypsum II LLC
Canada Georgia-Pacific Canada LP

SALES INFORMATION AND ORDER PLACEMENT

U.S.A. West: **1-800-824-7503**
Midwest: **1-800-876-4746**
South Central: **1-800-231-6060**
Southeast: **1-800-327-2344**
Northeast: **1-800-947-4497**

CANADA Canada Toll Free: **1-800-387-6823**
Quebec Toll Free: **1-800-361-0486**

TECHNICAL INFORMATION
U.S.A. and Canada: **1-800-225-6119,** www.gpgypsum.com

©2014 Georgia-Pacific Gypsum LLC. All rights reserved. 1/14. GP-TM Lit. Item #102169.

TRADEMARKS DENSDECK, FIREGUARD and the GEORGIA-PACIFIC logo are trademarks owned by or licensed to Georgia-Pacific Gypsum LLC. ROOFNAV is a registered mark of FM Global.

WARRANTIES, REMEDIES AND TERMS OF SALE For current warranty information for this product, please go to www.gpgypsum.com and select the product for warranty information. All sales of this product by Georgia-Pacific are subject to our Terms of Sale available at www.gpgypsum.com.

UPDATES AND CURRENT INFORMATION The information in this document may change without notice. Visit our website at www.gpgypsum.com for updates and current information.

CAUTION For product fire, safety and use information, go to www.buildgp.com/safetyinfo or call 1-800-225-6119.

FIRE SAFETY CAUTION Passing a fire test in a controlled laboratory setting and/or certifying or labeling a product as having a one-hour, two-hour, or any other fire resistance or protection rating and, therefore, as acceptable for use in certain fire rated assemblies/systems, does not mean that either a particular assembly/system incorporating the product, or any given piece of the product itself, will necessarily provide one-hour fire resistance, two-hour fire resistance, or any other specified fire resistance or protection in an actual fire. In the event of an actual fire, you should immediately take any and all actions necessary for your safety and the safety of others without regard for any fire rating of any product or assembly/system.

Submittal Sheet

USG Securock® Brand Gypsum-Fiber Roof Board

High-performance gypsum-fiber roof board for use in low-slope commercial roofing systems

- Exceptional bond and low absorption in adhered systems
- Moisture and mold resistant
- Excellent wind-uplift performance
- Manufactured from 97% recycled material

Description

USG Securock® Gypsum-Fiber Roof Board is a high-performance roof board for use in low-slope roofing systems. Its unique, fiber-reinforced, homogenous composition gives the panel strength and water resistance through to the core. USG Securock Gypsum-Fiber Roof Board provides exceptional bond and low absorption in adhered systems and with its homogenous composition achieves high wind-uplift ratings with no risk of facer delamination. Made from 97% recycled material, USG Securock Gypsum-Fiber Roof Board combines superior performance with sustainable design for all types of roofing systems including single-ply, fluid-applied, built-up, spray foam, metal and modified bitumen roofing.

Advantages

Exceptional Strength Engineered to provide superior wind-uplift performance for a wide variety of roof assemblies. USG Securock Gypsum-Fiber Roof Board has uniform composition providing enhanced bond strength of membrane systems with no risk of facer delamination.

Fire Performance Provides excellent fire performance and demonstrates exceptional surface burning characteristics (ASTM E84 (CAN/ULC-S102) Flame Spread 5, Smoke Developed 0).

Moisture and Mold Uniform water-resistant core ensures excellent moisture and mold resistance. Scored a maximum "10" for mold resistance on ASTM D3273.

Versatile Can be used as a component in single-ply, fluid-applied, built-up, spray foam, metal and modified bitumen roofing.

Sustainability Made from 97% recycled materials and has earned independent certification from Scientific Certification Systems for this achievement.

Limitations

- USG Securock Gypsum-Fiber Roof Board is engineered to perform within a properly designed roof system. The use of USG Securock Gypsum-Fiber Roof Board as a roofing component is the responsibility of the design professional.
- Consult roofing manufacturers for specific instructions on the application of their products to USG Securock Gypsum-Fiber Roof Board
- Weather conditions, dew, application temperature, installation techniques and moisture drive can have adverse effects on the performance of the roof system and are beyond the control of USG.
- Keep USG Securock Gypsum-Fiber Roof Board panels dry before, during and after installation. USG Securock Gypsum-Fiber Roof Board should not be installed during rains, heavy fogs and any other conditions that deposit moisture on the surface of the board. Apply only as much USG Securock Gypsum-Fiber Roof Board that can be covered by final roof membrane system in the same day. Avoid exposure to moisture from leaks or condensation.
- For re-roof or re-cover applications, existing roofing system must be dry throughout prior to application of USG Securock Gypsum-Fiber Roof Board.
- Plastic or poly packaging applied at the plant to protect board during rail or other transit should be removed upon receipt to prevent condensation or trapping of moisture, which may cause application problems.
- USG Securock Gypsum-Fiber Roof Board should be stored flat and off the ground with protection from the weather. If stored outdoors, a breathable waterproof covering should be used.
- When applying solvent-based adhesives or primers, allow sufficient time for the solvent to evaporate to avoid damage to roofing components.
- USG allows the bonding of cold mastic modified bitumen and torching directly to the surface. Consult with the system manufacturer for recommendations on this application.
- USG recommends maximum asphalt application temperature for Type III asphalt of 455 °F when using USG Securock Gypsum-Fiber Roof Board. Application temperatures above these recommended temperatures may adversely affect roof system performance.

Installation

- Refer to roof system manufacturer's written instructions, local code requirements and Factory Mutual Global (FMG) and/or Underwriters Laboratories (UL) requirements for proper installation techniques.
- Use fasteners specified in accordance with above requirements. Install approved fasteners with plates into the USG Securock Gypsum-Fiber Roof Board, flush with the surface. Fasteners should be installed in strict compliance with the roof system manufacturer's installation recommendations and FMG Loss Prevention Data Sheet 1-29. Proper fastener spacing is essential to achieve wind-uplift performance.

USG

– Locate edge joints on, and parallel to, deck ribs. Stagger end joints of adjacent lengths of USG Securock Gypsum-Fiber Roof Board. Butt board edges and ends loosely in typical installations.
– Butt board edges and ends loosely (minimum 1/16" gap on all edges) in typical installations. This gap may need to be larger depending on factors like the roof deck's size, membrane color, ultimate deck surface temperature and time of year the roof assembly is installed. Installations during temperatures below 50°F may require larger spacing. Please refer to USG's published physical properties below to calculate the actual gap needed for your specific project for all thicknesses.
– Roof boards should never be installed frozen.
– See product data table below for maximum flute span when panels are applied directly over metal decking.
– For vertical parapet applications, only 1/2" or 5/8" panels should be used. Maximum framing spacing is 24" o.c.

Fire Performance

– UL Classified as to Surface Burning Characteristics and Non-Combustability in accordance with ASTM E84 (CAN/ULC-S102)
  – Flame Spread 5 and Smoke Developed 0
– 1/4", 3/8", 1/2" and 5/8" Thickness — Class A in accordance with UL790 (CAN/ULC-S107). See the UL Building Materials Directory for more information.
– 5/8" Thickness — Meets requirements of Type X per ASTM C1278 and may be used in P series designs as a thermal barrier.

System Performance

– FM Approved
  – Complies with requirements of FM 4450 and FM 4470
  – Meets FM Class 1

Standards Compliance

USG Securock Gypsum-Fiber Roof Board is manufactured to conform to ASTM C1278, "Standard Specification for Fiber-Reinforced Gypsum Panel."

Physical Properties

	USG Securock Gypsum-Fiber Roof Board			
	1/4" (6.6 mm)	**3/8" (9.5 mm)**	**1/2" (12.7 mm)**	**5/8" (15.9 mm)**
Width, standard	4' (1220 mm)	4' (1220 mm)	4' (1220 mm)	4' (1220 mm)
Length, standard	4' (1220 mm) and 8' (2440 mm)	4' (1220 mm) and 8' (2440 mm)	4' (1220 mm) and 8' (2440 mm)	4' (1220 mm) and 8' (2440 mm)
Pieces per unit for 4' x 8' sheets	50	40	30	24
Weight, nominal lbs./unit, 4' x 8' sheet	2,575	2,575	2,725	2,525
Weight, nominal lbs./sq. ft.	1.57	1.96	2.76	3.20
Flexural strength, parallel, lbs. min., per ASTM C 473	40	70	110	161
Compressive strength, psi nominal	1800	1800	1800	1800
Flute spannability per ASTM E 661	2-5/8"	5"	8"	10"
Permeance, perms, per ASTM E 96	30	26	26	24
R Value per ASTM C 518	0.2	0.3	0.5	0.6
Coefficient of thermal expansion, inches/inch • °F, per ASTM E 831	8.0×10^{-6}	8.0×10^{-6}	8.0×10^{-6}	8.0×10^{-6}
Linear variation with change in moisture, inches/inch • %RH, per ASTM D 1037	8.0×10^{-6}	8.0×10^{-6}	8.0×10^{-6}	8.0×10^{-6}
Water absorption, % max, per ASTM C 473	10	10	10	10
Surface water absorption, nominal grams, per ASTM C 473	1.6	1.6	1.6	1.6
Mold resistance per ASTM D 3273*	10	10	10	10
Bending Radius	25'	25'	25'	30'

***ASTMD3273 Mold Resistance Testing** - In independent lab tests conducted on USG Securock Gypsum-Fiber Roof Board and USG Securock Glass-Mat Roof Board at the time of manufacture per ASTM D3273 Standard Test Method for Resistance to Growth of Mold on the Surface of Interior Coatings in an Environmental Chamber, both panels scored a 10. The ASTM lab test may not accurately represent the mold performance of building materials in actual use. Given unsuitable project conditions during storage, installation or after completion, any building material can be overwhelmed by mold. To manage the growth of mold, the best and most cost-effective strategy is to protect building products from water exposure during storage and installation and after completion of the building. This can be accomplished by using good design and construction practices.

Submittal Approvals:

Job Name	
Contractor	**Date**

Product Information
See usg.com for the most up-to-date product information.

Trademarks
The trademarks Securock ®, the USG Logo ™ and related marks are trademarks of USG Corporation or its subsidiaries or affiliates.

Note
Products described here may not be available in all geographic markets. Consult your U.S. Gypsum Company sales office or representative for information.

Notice
We shall not be liable for incidental or consequential damages, directly or indirectly sustained, nor for any loss caused by application of these goods not in accordance with current printed instructions or for other than their intended use. Our liability is expressly limited to replacement of defective goods. Any claim shall be deemed waived unless made in writing to us within thirty (30) days from the date it was or reasonably should have been discovered.

Safety First!
Follow good safety and industrial hygiene practices during handling and installation of all products and systems. Take necessary precautions and wear the appropriate personal protective equipment as needed. Read material safety data sheets and related literature on products before specification and/or installation.

Manufactured by
United States Gypsum Company
550 West Adams Street
Chicago, IL 60661

800 USG.4YOU (874.4968)
usg.com

RF5/rev. 10-13
© 2013 USG Corporation.
Printed in U.S.A.

Mule-Hide Products Co., Inc.
1195 Prince Hall Dr.
Beloit, WI 53511

PRE-TAPED WALKWAY PADS

PRODUCT DESCRIPTION

Mule-Hide Pre-Taped Walkway Pads are designed to protect the membrane in areas exposed to repetitive foot traffic.

BASIC USES

Mule-Hide requires walkways to be installed at all traffic concentration points, such as roof hatches, access door, rooftop ladders, etc. regardless of traffic frequency. Walkways are also required if regular maintenance (once a month or more) is necessary to service rooftop equipment.

SPECIFICATIONS

Typical Properties and Characteristics		
Color		White or Black
Pad Thickness		0.182”(4.6mm) ± 10%
Tensile Strength	ASTM D412 Unaged	500 psi
Tear Resistance	ASTM D624 Unaged	250 lbf/in
Typical properties and characteristics are based on samples tested and are not guaranteed for all samples of this product. This data and information is intended as a guide and does not reflect the specification or specification range for any particular property of this product.		

PACKAGING

Pads: 30 inches X 30 inches - 50 per skid (75 cm X 75 cm)

BENEFITS & SUPPLEMENTAL STATEMENTS

- Product has excellent tear, puncture and UV resistance.
- Provides a slip resistant surface.
- Available in both Black and White

INSTALLATION INSTRUCTIONS

1. The entire surface where the Walkway Pad will be applied must be clean. The adhesive on the back of the Walkway Pad will not adhere to dusted or dirty surfaces. Any residual contamination will be detrimental to the bond strength of the adhesive.
2. Remove all foreign material from roofing membrane.
    a. Remove excess mica dust or talc from membrane surface by brooming or wiping with a clean, dry rag.
    b. The use of Weathered Membrane Cleaner may be necessary. This process is essential on membrane that has been exposed for a number of weeks.
    Note: Permeation-resistant gloves (that meet ANSI/ISEA 105- 2005) are required for hand protection when cleaners or primers are being used.
    c. Allow the membrane to dry thoroughly before proceeding.
3. Apply tape primer with a clean Scotch-Brite pad. Scrub the area of the membrane (where the Walkway Pad is to be applied) in a circular motion to achieve a thin, even coating on the membrane. The properly cleaned/primed area will be uniform in color without streaks and free of globs or puddles.

PRE-TAPED WALKWAY PADS

INSTALLATION INSTRUCTIONS (continued)

Note: The use of excessive amounts of primer will not enhance the adhesion of the Walkway Pad to the EPDM membrane. Use only the amount necessary to obtain 100%coverage of the area where the Walkway Pad will be applied.

4. Allow the primer to properly flash off until it does not transfer to a dry finger touch. Install the Walkway Pads as soon as the primer flashes off to minimize potential dust contamination and promote adhesion in colder weather.
5. Allow a 1" (25 mm) wide break between adjoining Walkway Pads. Do not continue Walkway Pads over field seams. Allow a minimum 1" break (25 mm) over field seams.
   Review Mule-Hide specifications and details for additional information.

PRECAUTIONS

This product is to be used as a walkway only and is not designed as a substitute for ballast. Pre-Taped Walkway Pads cannot be installed within 10' (3 m) of the roof perimeter or on projects which exceed 50' (15 m) in height for ballasted systems. Concrete pavers may be used in these areas. When installing pre-taped walkway pads in conjunction with ballast, avoid entrapment of small ballast below walkway pads. Pre-Taped Walkway Pads are a maintenance item and are not covered under the Mule-Hide membrane systems warranty.

PROTECTION & SAFETY

Mule-Hide maintains Material Safety Data Sheets on all of its products. Material Safety Data Sheets contain health and safety information for your development of appropriate product handling procedures to protect your employees and customers. Mule-Hide's Material Safety Data Sheets should be read and understood by all of your supervisory personnel and employees before using Mule-Hide products in your facilities.

ADDITIONAL INFORMATION

The information given on this PDS is subject to change without notice. Always check the Mule-Hide website at www.mulehide.com for the latest information, changes and updates or contact Mule-Hide Products Company at 800-786-1492.

DISCLAIMER

The statements provided concerning the material shown are intended as a guide for material usage and are believed to be true and accurate at the time of printing. No statement made by anyone may supersede this information, except when done in writing by Mule-Hide Products Co., Inc. Since the manner of use is beyond our control, Mule-Hide does not authorize anyone to make any warranty of merchantability or fitness for any particular purpose or any other warranty, guarantee or representation, expressed or implied, concerning this material. This product may be eligible for a Mule-Hide warranty, please check the Mule-Hide website at www.mulehide.com or contact Mule-Hide directly at 800-786-1492 for details. Buyer and user accept the product under these conditions and assume the risk of any failure, any injury person or property (including that of the user), loss or liability resulting from the handling, storage or use of the product whether or not it is handled, stored or used in accordance with the directions or specifications. Mule-Hide must be notified in writing of any claims and be given the opportunity to inspect the alleged failure before repairs are made.

Mule-Hide Products Co., Inc.
1195 Prince Hall Dr.
Beloit, WI 53511

PRODUCT DATA SHEET
PDS 09-6450
Revision Date: Feb 2014

MULE-HIDE RUBBER PAVER BLOCKS

PRODUCT DESCRIPTION

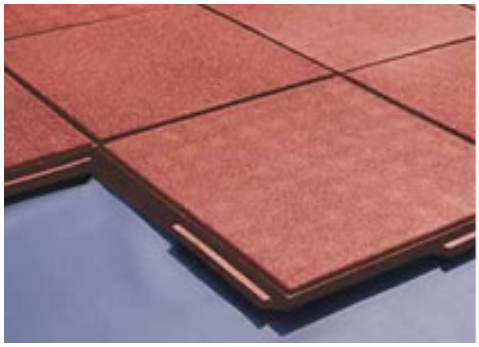

Mule-Hide Rubber Paver Blocks are an environmentally friendly product that provides superior protection to the underlying membrane. These Rubber Paver Blocks feature a resilient, shock-absorbing, weather-resistant traffic surface. Pavers lock together to provide multi-directional drainage patterns eliminating the need for protective mats. The pavers consist of 90% post-consumer recycled content, providing an environmentally friendly product.

BASIC USES

Used as a paver system for all Mule-Hide Membranes.

TYPICAL PHYSICAL PROPERTIES

Property	Test Method	Typical Characteristics
Dimensions @ 78ºF (26ºC)	N/A	24” x 24” ± ¼”
Weight	N/A	6 lbs per square foot
Water Surface Density	ASTM D3676	66 lbs per cubic foot
Coefficient of Thermal Expansion	N/A	1.10×10^{-3} in. / ft. / ºF
Tensile Strength	ASTM D412	107 psi
Elongation at Break	ASTM D412	165%
Tear Resistance	ASTM D624	33 lbs / in.
Abrasion Testing, Taber Abrader 1000 g. wt., 2000 cycles, H-21 wheel	ASTM D3389	0.75 g. loss
Resistance to Outdoor Ultraviolet Weathering	Xenon Arc, 500 hrs. exposure, 178ºF (81ºC), 50% relative humidity	85% tensile retention 100% elongation retention
Burning Pill Test	ASTM D2859	Pass
Freeze / Thaw Cycling	ASTM C67	No Deterioration
Typical properties and characteristics are based on samples tested and are not guaranteed for all samples of this product. This data and information is intended as a guide and does not reflect the specification range for any particular property of this product.		

COLORS

Available in BLACK and TERRA COTTA

INSTALLATION INSTRUCTIONS

Mule-Hide Rubber Paver Blocks are installed over a completed roofing membrane. The pavers are loose laid and interlocked, offering superior protection to the membrane while still maintaining accessibility to the membrane. This system can be used over a variety of roofing systems and is ideal for those roofs that are prone to heavy maintenance traffic. The Mule-Hide Rubber Paver Blocks are not recommended for use in areas that are subject to small, narrow point loading, such as chairs with narrow legs or high heeled shoes.

PROTECTION & SAFETY

Mule-Hide maintains Material Safety Data Sheets on all of its products. Material Safety Data Sheets contain health and safety information for your development of appropriate product handling procedures to protect your employees and customers. Mule-Hide's Material Safety Data Sheets should be read and understood by all of your supervisory personnel and employees before using Mule-Hide products in your facilities.

MULE-HIDE RUBBER PAVER BLOCKS

ADDITIONAL INFORMATION

The information given on this PDS is subject to change without notice. Always check the Mule-Hide website at www.mulehide.com for the latest information, changes and updates or contact Mule-Hide Products Company at 800-786-1492.

DISCLAIMER

The statements provided concerning the material shown are intended as a guide for material usage and are believed to be true and accurate at the time of printing. No statement made by anyone may supersede this information, except when done in writing by Mule-Hide Products Co., Inc. Since the manner of use is beyond our control, Mule-Hide does not authorize anyone to make any warranty of merchantability or fitness for any particular purpose or any other warranty, guarantee or representation, expressed or implied, concerning this material. This product may be eligible for a Mule-Hide warranty, please check the Mule-Hide website at www.mulehide.com or contact Mule-Hide directly at 800-786-1492 for details. Buyer and user accept the product under these conditions and assume the risk of any failure, any injury person or property (including that of the user), loss or liability resulting from the handling, storage or use of the product whether or not it is handled, stored or used in accordance with the directions or specifications. Mule-Hide must be notified in writing of any claims and be given the opportunity to inspect the alleged failure before repairs are made.

Mule-Hide Products Co., Inc.
1195 Prince Hall Dr.
Beloit, WI 53511

MULE-HIDE YELLOW WARNING STRIP

PRODUCT DESCRIPTION

Mule-Hide Yellow Warning Strip is a Bright Yellow colored, nominal 30-mil (0.76mm) thick non-reinforced TPO membrane laminated to a nominal 30-mil (0.76mm) thick, fully cured synthetic rubber pressure-sensitive adhesive. Yellow Warning Strip is available in 12-inch (305-mm) wide by 100-foot (30 m) long rolls.

BASIC USES

Yellow Warning Strip is intended for use on EPDM, TPO, or Hypalon roofing systems to provide a visual warning of an impending hazard (i.e. roof edge, deep drain sump, skylight, etc.) Meant to be beneficial when maintenance personnel are frequently on the roof.
Yellow Warning Strip cannot be used for flashings or as a coverstrip.

TYPICAL PROPERTIES AND CHARACTERISTICS

Typical Properties and Characteristics	
Tensile Strength, ASTM D412	2,500 psi (17.2 MPa) minimum 2,900 psi (20.0 MPa) typical
Elongation, ASTM D412	600% minimum 750% typical
Hardness, ASTM D2240	Typical 80, Shore A
Color	YELLOW
Base	Membrane - Non-reinforced TPO Adhesive - Synthetic Rubber
Solids	100%
Nominal Thickness	0.060" (1.52mm)
Nominal Width	Membrane - 12" (300mm)
Nominal Length	100 ft. (30.5 m)
Net Weight per Roll	44 lbs (10kg)
Packaging	One Roll/Carton
Shelf Life	1 Year
Typical properties and characteristics are based on samples tested and are not guaranteed for all samples of this product. This data and information is intended as a guide and does not reflect the specification or specification range for any particular property of this product.	

LEED Information

LEED Information	
Pre-consumer Recycled Content	0%
Post-consumer Recycled Content	0%
Manufacturing Location	Eugene, OR
Solar Reflectance Index (SRI)	N/A

MULE-HIDE YELLOW WARNING STRIP

INSTALLATION INSTRUCTIONS

1. Clean the existing membrane with Weathered Membrane Cleaner and natural fiber rags. A Scotch-Brite® Pad may be necessary to remove a heavy build-up of dirt. Pour a small amount of Weathered Membrane Cleaner over a primer pad and rub area to receive strip in a circular motion. Wipe away residual dirt with clean rags.
2. Using a clean Scotch-Brite® Pad, apply Tape Primer to the area of the membrane to be overlaid. The properly primed area will be uniform in color without streaks and free of globs or puddles.
3. The entire surface where the flashing will be applied must be clean. The adhesive on the back of the Yellow Warning Strip will not adhere to dusted/dirty surfaces. Any residual surface contamination will be detrimental to the bond strength of the adhesive.
4. Install Yellow Warning Strip immediately after the Tape Primer flashes off to minimize potential dust contamination and to promote adhesion in colder weather.
5. Peel off 10-12" (250-300 mm) of the protective release liner from the Yellow Warning Strip. Position the strip over the area to be overlaid and press down using firm, even hand pressure across the entire area. Continue this process until the full area to be overlaid is completed. (Cut-Edge Sealant is not required on edges of the Yellow Warning Strip).
6. Immediately roll the Yellow Warning Strip with a 2" (50-mm) wide neoprene roller using positive pressure. Roll across the Yellow Warning Strip edge, not parallel to it. **In areas where the Yellow Warning Strip crosses a metal joint, a membrane seam (T-joint) or at an end lap use a hot air gun to heat the top surface of the Yellow Warning Strip and crease the material into the step-off.** This process reduces the possibility of a water channel forming.
8. NOT FOR USE AS FLASHING OR AS A COVERSTRIP.
   Review Mule-Hide Specifications and Details for installation information.

PRECAUTIONS

1. Yellow Warning Strip cannot be used for flashing corners, pipes, T-joints, or butt joints on TPO Fleece BACK systems, or any angled metal flanges such as gravel stops or other canted metal edgings.
2. Avoid prolonged contact with skin. In case of contact with skin, thoroughly wash affected area with soap and water.
3. Due to solvent flash-off, condensation may form on freshly applied Tape Primer when the ambient temperature is near the dew point. If condensation develops, the application of Tape Primer and Yellow Warning Strip must be discontinued since proper adhesion will not be achieved.
4. Allow the surface to dry and apply a thin freshener coat of Tape Primer to the previously coated surface and apply Yellow Warning Strip when conditions allow.
5. Do not allow waste products (petroleum, grease, oil, solvents, vegetable or mineral oil, animal fats, etc.) or direct steam venting to come in contact with the Yellow Warning Strip.
6. KEEP OUT OF THE REACH OF CHILDREN.

STORAGE & HANDLING

1. Material should be stored in a clean, dry area and protected from extreme temperatures.
2. Prolonged job site storage temperatures in excess of 90°F (32°C) may affect product shelf life. In warm, sunny weather; keep Yellow Warning Strip rolls in their box or in a shaded area until ready to use.
3. Storage and use of Yellow Warning Strip at temperatures below 40°F (4°C) will result in a loss of adhesive tack, and in extreme cases, will result in no bond to the substrate.
4. Overnight storage must be available to keep the temperature of the Yellow Warning Strip at a minimum of 60ºF (15ºC). Hot boxes for job site storage must be provided to maintain a minimum product temperature of 40º8F (48ºC).

MULE-HIDE YELLOW WARNING STRIP

PROTECTION & SAFETY

Mule-Hide maintains Material Safety Data Sheets on all of its products. Material Safety Data Sheets contain health and safety information for your development of appropriate product handling procedures to protect your employees and customers. Mule-Hide's Material Safety Data Sheets should be read and understood by all of your supervisory personnel and employees before using Mule-Hide products in your facilities.

ADDITIONAL INFORMATION

The information given on this PDS is subject to change without notice. Always check the Mule-Hide website at www.mulehide.com for the latest information, changes and updates or contact Mule-Hide Products Company at 800-786-1492.

DISCLAIMER

The statements provided concerning the material shown are intended as a guide for material usage and are believed to be true and accurate at the time of printing. No statement made by anyone may supersede this information, except when done in writing by Mule-Hide Products Co., Inc. Since the manner of use is beyond our control, Mule-Hide does not authorize anyone to make any warranty of merchantability or fitness for any particular purpose or any other warranty, guarantee or representation, expressed or implied, concerning this material. This product may be eligible for a Mule-Hide warranty, please check the Mule-Hide website at www.mulehide.com or contact Mule-Hide directly at 800-786-1492 for details. Buyer and user accept the product under these conditions and assume the risk of any failure, any injury person or property (including that of the user), loss or liability resulting from the handling, storage or use of the product whether or not it is handled, stored or used in accordance with the directions or specifications. Mule-Hide must be notified in writing of any claims and be given the opportunity to inspect the alleged failure before repairs are made.

Mule-Hide Products Co., Inc.
1195 Prince Hall Dr.
Beloit, WI 53511

PRODUCT DATA SHEET
PDS 09-6505
Revision Date: 08/27/09

MULE-HIDE HP PROTECTIVE MAT

PRODUCT DESCRIPTION

A nominal 6.0-ounce per square yard (140 grams per square meter) UV resistant polypropylene needle punched fabric.

BASIC USES

Can be used above the membrane as a slipsheet for crushed stone or pavers or below the membrane as a minimum underlayment mat for Mule-Hide's Mechanically-Attached or Ballasted System applications. Consult current specifications for underlayment requirements.

TYPICAL PHYSICAL PROPERTIES

Description	ASTM Test Method	Average Roll Values
Tensile Strength (Grab)	D 4632	160 lbs. (68 Kg)
Burst Strength (Mullen)	D 3786	350 psi (2413 kPa)
Elongation (Ultimate)	D 4632	> 50%
Puncture Strength	D 4833	90 lbs. (41 Kg)
Trapezoidal Tear	D 4533	65 lbs. (30 Kg)
UV Resistance (500 Hr St. Ref)	D 4355	> 70%
Permeability Coefficient	D 4491	0.2 cm/sec
pH Resistance		2 - 13
Thickness		0.65 in (1.65 mm)

PACKAGING

Packaged in rolls 15' x 300' (4.6m x 92m)
Coverage: 4500 SF (405 SM)
Weight per Roll: 210 lbs (83Kg)
Roll Diameter: 18 in (460 mm)

INSTALLATION INSTRUCTIONS

Mechanically Attached Roofing Systems: Install Mule-Hide HP Protective Mat over the substrate with all edges overlapped a minimum of 3" (75 mm). HP Protective Mat must be fastened to the roof deck with a minimum of one insulation fastener and plate per every 4 square feet.

Ballasted Roofing Systems: When specified under Mule-Hide roofing membrane, position the Mule-Hide HP Protective Mat loosely over the substrate with all edges overlapped a minimum of 6" (150 mm). The roofing membrane must be positioned to completely cover the previously installed HP Protective Mat.

The HP Protection Mat can also be installed on top of the Mule-Hide roofing membrane as a protection layer, typically under pavers or crushed stone. After completing all of the membrane and flashing seams, loosely lay the Mule-Hide HP Protective Mat over the membrane with the side laps overlapped a minimum of 6" (150 mm) and end laps overlapped 12" (300 mm). Prior to placement of ballast, extend the HP Protective Mat a minimum of 2" (50 mm) above the anticipated ballast level at the perimeter and penetrations, except at roof drains and scuppers.

The fabric must extend to drain bases and scupper openings but must not cover or restrict flow to the drains. Additional matting must be installed around penetrations to prevent direct contact between crushed stone and flashing.

MULE-HIDE HP PROTECTIVE MAT

INSTALLATION INSTRUCTIONS (Continued)

Note: Following placement of the fabric, install ballast, temporary ballast, or spot adhere with bonding adhesive to prevent the movement or displacement of unballasted fabric.

PROTECTION & SAFETY

This product is not hazardous as defined in CFR 1910.1200.
Dust may be irritating to respiratory tract and eyes.
Material is flammable. Do not expose to flame.

Mule-Hide maintains Material Safety Data Sheets on all of its products. Material Safety Data Sheets contain health and safety information for your development of appropriate product handling procedures to protect your employees and customers. Mule-Hide's Material Safety Data Sheets should be read and understood by all of your supervisory personnel and employees before using Mule-Hide products in your facilities.

ADDITIONAL INFORMATION

The information given on this PDS is subject to change without notice. Always check the Mule-Hide website at www.mulehide.com for the latest information, changes and updates or contact Mule-Hide Products Company at 800-786-1492.

DISCLAIMER

The statements provided concerning the material shown are intended as a guide for material usage and are believed to be true and accurate at the time of printing. No statement made by anyone may supersede this information, except when done in writing by Mule-Hide Products Co., Inc. Since the manner of use is beyond our control, Mule-Hide does not authorize anyone to make any warranty of merchantability or fitness for any particular purpose or any other warranty, guarantee or representation, expressed or implied, concerning this material. This product may be eligible for a Mule-Hide warranty, please check the Mule-Hide website at www.mulehide.com or contact Mule-Hide directly at 800-786-1492 for details. Buyer and user accept the product under these conditions and assume the risk of any failure, any injury person or property (including that of the user), loss or liability resulting from the handling, storage or use of the product whether or not it is handled, stored or used in accordance with the directions or specifications. Mule-Hide must be notified in writing of any claims and be given the opportunity to inspect the alleged failure before repairs are made.