SECTION 7

MULE-HIDE PRODUCTS CO., INC.
PVC STANDARD DETAILS

TABLE OF CONTENTS

PLEASE CONSULT THE MULE-HIDE WEBSITE FOR THE MOST CURRENT INFORMATION AT WWW.MULEHIDE.COM

MULE-HIDE PRODUCTS CO., INC.
PVC STANDARD DETAILS

TABLE OF CONTENTS

Roof Edge Treatment **Detail No.**
Wood Nailer Attachment.....MHP-100
Coated Metal Gravel Stop MHP-101
Gravel Stop.....MHP-102
Snap-On Fascia.....MHP-103
Drip Edge.....MHP-104
Drip Edge.....MHP-105
Gutter Termination.....MHP-106
Gutter Termination.....MHP-107
Coated Metal Butt Joint MHP-108

Splices
Lap Cross Section MHP-110
Seam Intersection – Fully Adhered MHP-111
Lap Cross Section MHP-112
Plate and Fastener Placement MHP-113
Seam Intersection – Mech. Att. MHP-114

Parapet/Curb Flashing
Parapet Flashing.....MHP-120
Coated Metal Wall Flashing.....MHP-121
Curb Flashing MHP-122
Coated Metal Curb Flashing.....MHP-123

Drains
Roof Drain.....MHP-130
Roof Drain.....MHP-131
Roof Drain (Page 1 of 2).....MHP-132
Roof Drain (Page 2 of 2).....MHP-132
Coated Metal Scupper.....MHP-133
Roof Drain.....MHP-134
Roof Drain.....MHP-135
Coated Metal Scupper (soldered).....MHP-136

Pipe Flashings
Pre-Molded Pipe Flashing MHP-140
Field Fabricated Pipe Flashing.....MHP-141
Field Fabricated Hot Pipe MHP-142
Molded Sealant Pocket.....MHP-143

Expansion Joints
Expansion Joint – Deck to Deck.....MHP-150
Expansion Joint – Deck to Wall.....MHP-151

PVC Tie-ins
Tie-In to Existing Single Ply.....MHP-160
Transition to Shingle Roof MHP-161

PVC Tie-ins (continued)
Transition to Shingle Roof MHP-162

Vertical Terminations
Metal Cap MHP-170
Reglet Counterflashing MHP-171
Termination Bar MHP-172
Coping Stone MHP-173
15-Year Warranty Mechanical MHP-174
Surface Mounted Counterflashing MHP-175
Concrete Parapet with Term Bar MHP-176

Miscellaneous
Pre-Molded Outside Corner..... MHP-180
Field Fabricated Outside Corner..... MHP-181
Pre-Molded Inside Corner..... MHP-182
Field Fabricated Inside Corner MHP-183
Pre-Molded Corner with Coated Metal MHP-184
Inside Corner with Coated Metal MHP-185
Membrane Securement MHP-186
Ridge Membrane Securement..... MHP-190
Sleeper Support (Light Weight) MHP-191
Sleeper Support (Heavy Weight)..... MHP-192
Sleeper Support (Heavy Weight)..... MHP-193
MH-100 Walkway..... MHP-194
Concrete Paver Walkway MHP-195
Termination Bar Elevation Change..... MHP-196
Termination Bar at Tilt-Up Panel MHP-197
Termination Bar at Corner MHP-198

Mechanically Attached Sheet Layout
Field Membrane Layout..... MPH-300
Perimeter Attachment..... MPH-301

Insulation Attachment
Extruded Polystyrene Insulations MHT-MA-700
Insulation Attachment Patterns.....MHT-MA-701
Mule-Hide – 8 Field Fasteners.....MHT-FA-720
Mule-Hide – 12 Field Fasteners.....MHT-FA-721
Mule-Hide – 16 Field Fasteners.....MHT-FA-722
Mule-Hide – 17 Field Fasteners.....MHT-FA-723
Factory Mutual - 8 Field Fasteners..... MHT-FM-724
Factory Mutual - 12 Field Fasteners..... MHT-FM-725
Factory Mutual - 16 Field Fasteners..... MHT-FM-726
Factory Mutual - 17 Field Fasteners..... MHT-FM-727

PLEASE CONSULT THE MULE-HIDE WEBSITE FOR THE MOST CURRENT INFORMATION AT WWW.MULEHIDE.COM

FASTENING PATTERNS FOR EXTRUDED POLYSTYRENE INSULATION
FOR USE DIRECTLY UNDER MECHANICALLY ATTACHED WHITE TPO
REINFORCED MEMBRANE ONLY

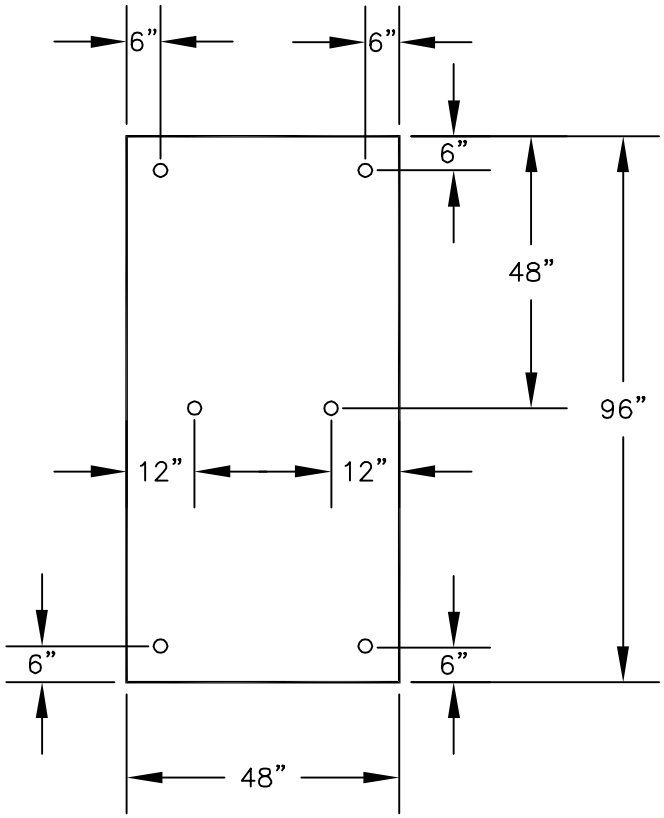

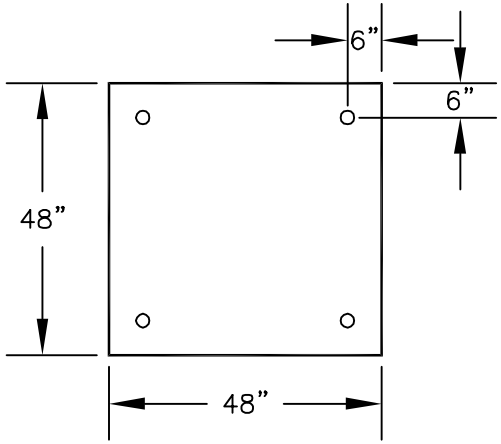

NOTES:

1. MULE–HIDE 3" METAL STRESS PLATES MUST BE USED WITH MULE–HIDE FASTENERS FOR INSULATION ATTACHMENT.

2. FASTENER TOLERANCE SHALL BE ±1 INCH.

MULE-HIDE PRODUCTS CO., INC.	**EXTRUDED POLYSTYRENE INSULATION ATTACHMENT FASTENING PATTERNS** **SYSTEMS:** **MECHANICALLY ATTACHED**	**DETAIL NO.:** **MHT-MA-700** REVISION DATE: 01/2013

®

2" OR THICKER POLYISOCYANURATE INSULATION ONLY

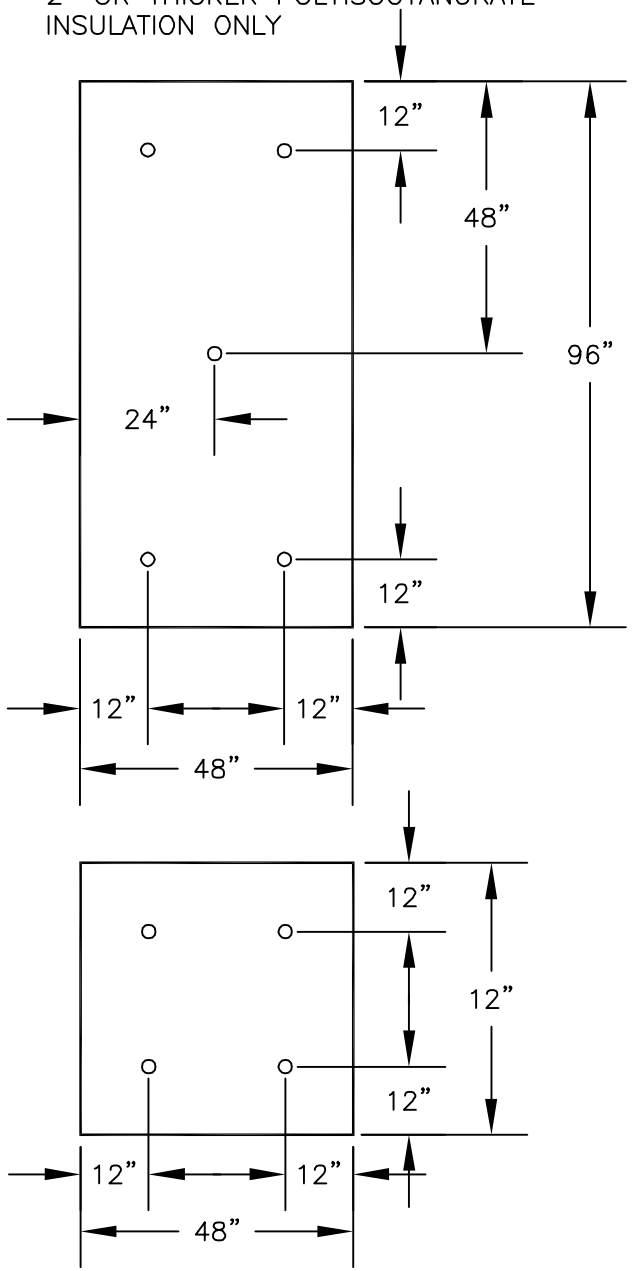

ALL OTHER INSULATIONS

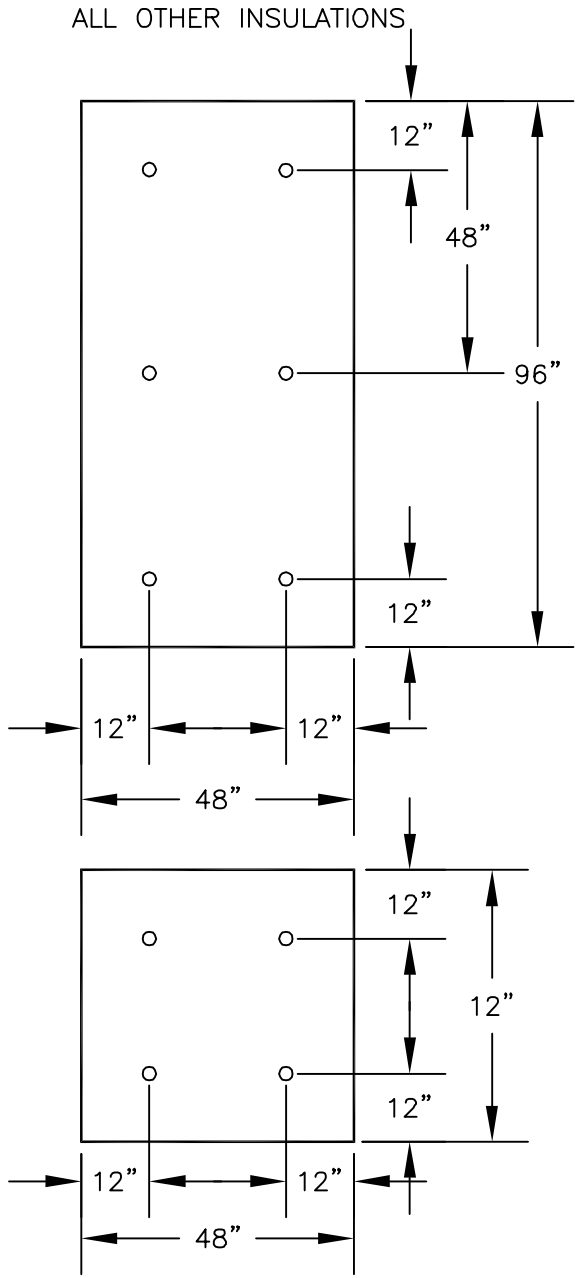

NOTES:

1. MULE–HIDE 3" METAL STRESS PLATES MUST BE USED WITH MULE–HIDE FASTENERS FOR INSULATION ATTACHMENT.

2. FASTENER TOLERANCE SHALL BE +1 INCH.

MULE-HIDE PRODUCTS CO., INC.	**INSULATION ATTACHMENT PATTERNS**	**DETAIL NO.:**
	SYSTEMS:	**MHT-MA-701**
	MECHANICALLY ATTACHED	REVISION DATE: 01/2013

®

NOTES:

1. 8 FASTENERS PER 4' X 8' BOARDS (1 FASTENER EVERY 4 SQUARE FEET) IN THE FIELD IS APPROVED FOR INSULATIONS 2" OR MORE THICK WHEN USED AS THE TOP LAYER.

2. PERIMETER AND CORNER DIMENSIONS ARE TO BE A MINIMUM OF 8' WIDE UNLESS THE PROJECT REQUIRES FACTORY MUTUAL COMPLIANCE. CONTACT MULE-HIDE TECHNICAL DEPARTMENT FOR FACTORY MUTUAL REQUIREMENTS.

3. MULE-HIDE FASTENERS AND 3" STRESS PLATES MUST BE USED FOR INSULATION ATTACHMENT.

4. REFER TO MULE-HIDE WIND UPLIFT RATINGS FOR APPROPRIATE FASTENER DENSITY REQUIRED.

5. FASTENER DENSITY INCREASES BASED ON THE FOLLOWING:
   - 50% FOR PERIMETERS
   - 100% FOR CORNERS

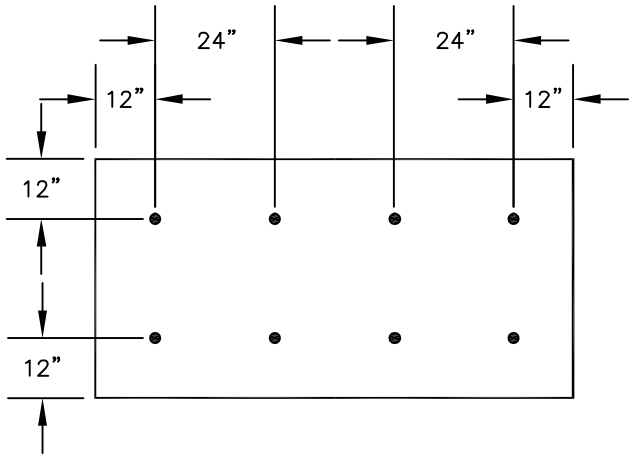

FIELD (8)
1 FASTENER PER EVERY 4 SQ. FT.

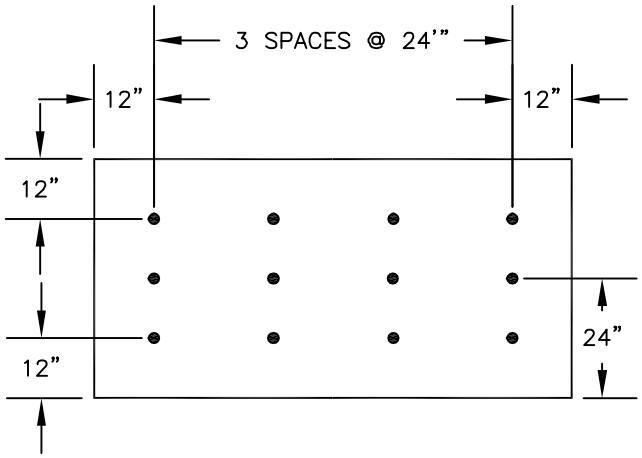

PERIMETER (12)
1 FASTENER PER EVERY 2.66 SQ. FT.

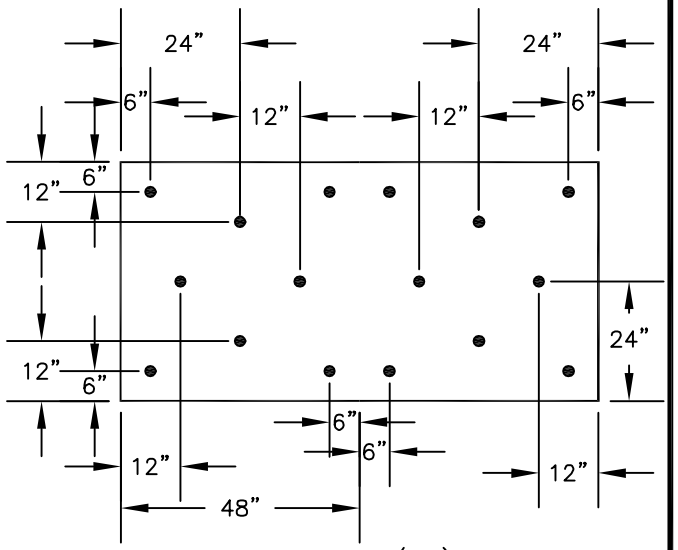

CORNERS (16)
1 FASTENER PER EVERY 2 SQ. FT.

MULE-HIDE PRODUCTS CO., INC.	**2" OR THICKER INSULATION ATTACHMENT 8 FASTENERS PER 4' X 8' IN FIELD** **SYSTEMS:** **FULLY ADHERED**	**DETAIL NO.:** **MHT-FA-720** REVISION DATE: 01/2013

®

NOTES:

1. 12 FASTENERS PER 4' X 8' BOARD IN THE FIELD IS APPROVED FOR 1–1/2" TO 2" THICK POLYISOCYANURATE INSULATIONS WHEN USED AS THE TOP LAYER OR ¼" DENS DECK INSTALLED AS A COVER BOARD.

2. PERIMETER AND CORNER DIMENSIONS ARE TO BE A MINIMUM OF 8' WIDE UNLESS THE PROJECT REQUIRES FACTORY MUTUAL COMPLIANCE. CONTACT MULE–HIDE TECHNICAL DEPARTMENT FOR FACTORY MUTUAL REQUIREMENTS.

3. MULE–HIDE FASTENERS AND 3" STRESS PLATES MUST BE USED FOR INSULATION ATTACHMENT.

4. REFER TO MULE–HIDE WIND UPLIFT RATINGS FOR APPROPRIATE FASTENER DENSITY REQUIRED.

5. FASTENER DENSITY INCREASES BASED ON THE FOLLOWING:
   - 50% FOR PERIMETERS
   - 100% FOR CORNERS

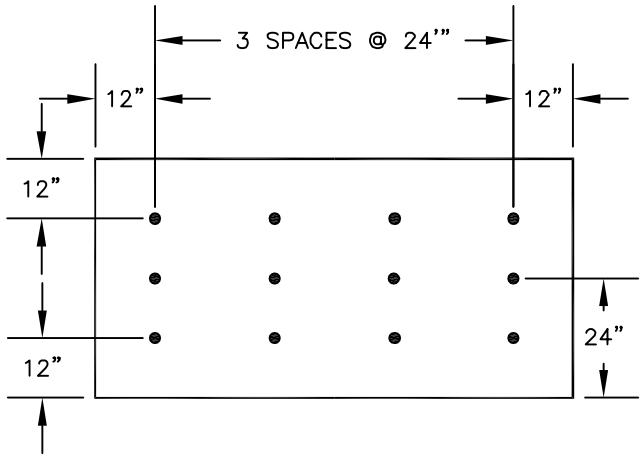

FIELD (12)
1 FASTENER PER EVERY 2.66 SQ. FT.

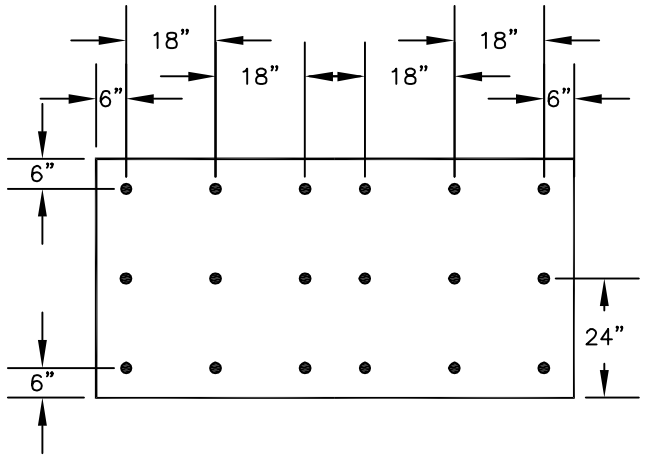

PERIMETER (18)
1 FASTENER PER EVERY 1.77 SQ. FT.

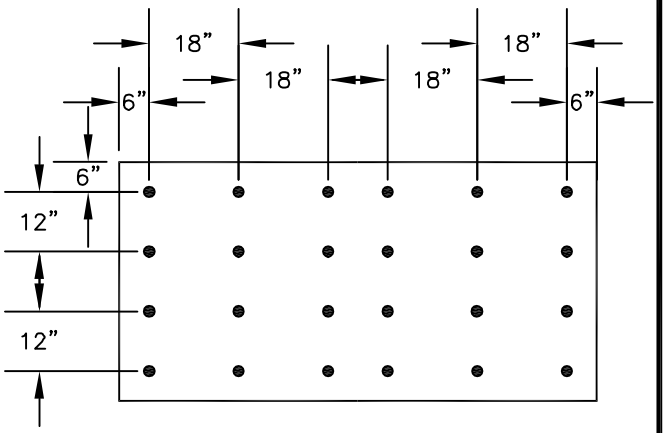

CORNERS (24)
1 FASTENER PER EVERY 1.33 SQ. FT.

MULE-HIDE PRODUCTS CO., INC.	**INSULATION ATTACHMENT 12 FASTENERS PER 4' X 8' IN FIELD** **SYSTEMS:** **FULLY ADHERED**	**DETAIL NO.:** **MHT-FA-721** REVISION DATE: 01/2013

®

NOTES:

1. 16 FASTENERS PER 4' X 8' BOARD IN THE FIELD IS MULE-HIDE'S STANDARD FOR FULLY ADHERED TPO ROOFING SYSTEMS.

2. PERIMETER AND CORNER DIMENSIONS ARE TO BE A MINIMUM OF 8' WIDE UNLESS THE PROJECT REQUIRES FACTORY MUTUAL COMPLIANCE. CONTACT MULE-HIDE TECHNICAL DEPARTMENT FOR FACTORY MUTUAL REQUIREMENTS.

3. MULE-HIDE FASTENERS AND 3" STRESS PLATES MUST BE USED FOR INSULATION ATTACHMENT.

4. REFER TO MULE-HIDE WIND UPLIFT RATINGS FOR APPROPRIATE FASTENER DENSITY REQUIRED.

5. FASTENER DENSITY INCREASES BASED ON THE FOLLOWING:
   - 50% FOR PERIMETERS
   - 100% FOR CORNERS

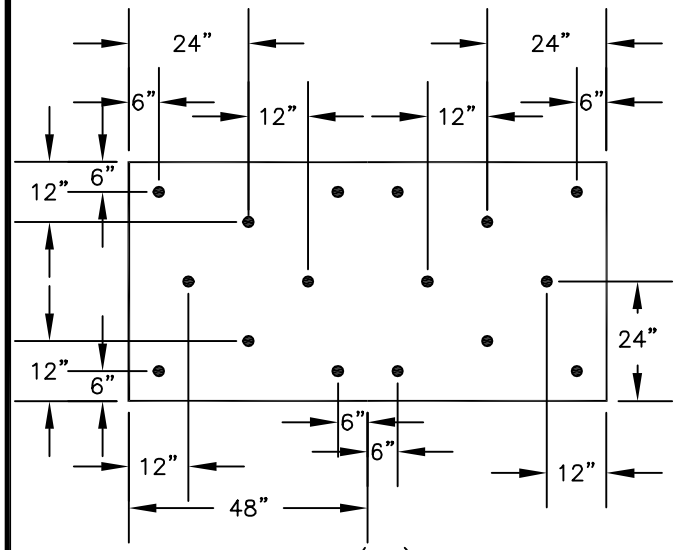

FIELD (16)
1 FASTENER PER EVERY 2 SQ. FT.

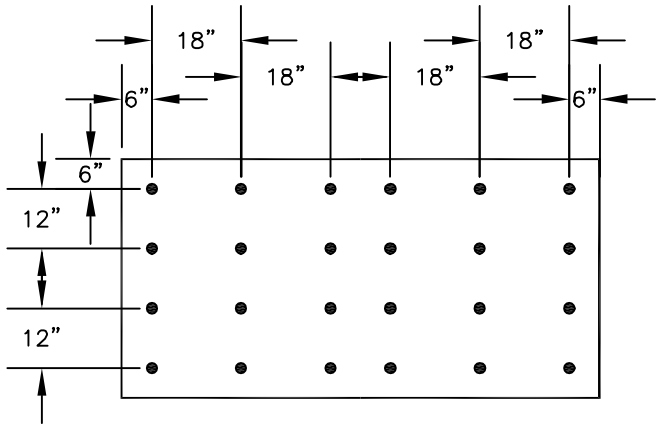

PERIMETER (24)
1 FASTENER PER EVERY 1.33 SQ. FT.

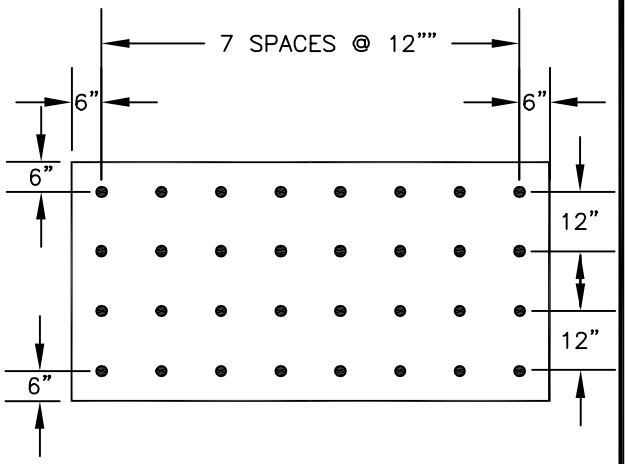

CORNERS (32)
1 FASTENER PER EVERY 1 SQ. FT.

MULE-HIDE PRODUCTS CO., INC.	**INSULATION ATTACHMENT** **16 FASTENERS PER 4' X 8' IN FIELD** **SYSTEMS:** **FULLY ADHERED**	**DETAIL NO.:** **MHT-FA-722** REVISION DATE: 01/2013

®

NOTES:

1. 17 FASTENERS PER 4' X 8' BOARD IN THE FIELD IS APPROVED FOR OSB COVER BOARDS OR OSB/POLYISOCYANURATE COMPOSITE INSULATION.

2. PERIMETER AND CORNER DIMENSIONS ARE TO BE A MINIMUM OF 8' WIDE UNLESS THE PROJECT REQUIRES FACTORY MUTUAL COMPLIANCE. CONTACT MULE-HIDE TECHNICAL DEPARTMENT FOR FACTORY MUTUAL REQUIREMENTS.

3. MULE-HIDE FASTENERS AND 3" STRESS PLATES MUST BE USED FOR INSULATION ATTACHMENT.

4. REFER TO MULE-HIDE WIND UPLIFT RATINGS FOR APPROPRIATE FASTENER DENSITY REQUIRED.

5. FASTENER DENSITY INCREASES BASED ON THE FOLLOWING:
   - 50% FOR PERIMETERS
   - 100% FOR CORNERS

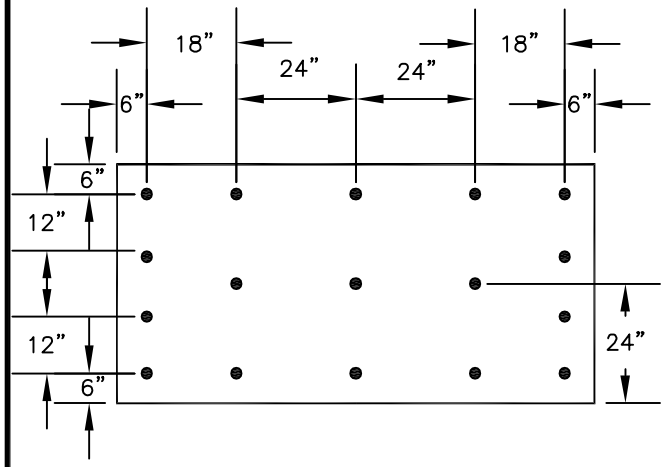

FIELD (17)
1 FASTENER PER EVERY 1.88 SQ. FT.

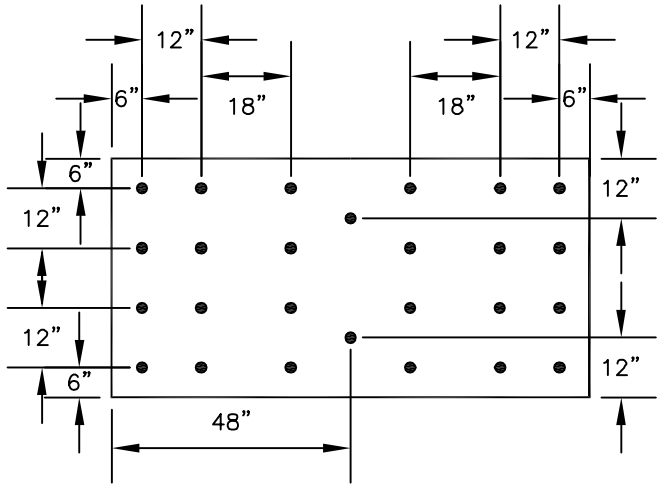

PERIMETER (26)
1 FASTENER PER EVERY 1.23 SQ. FT.

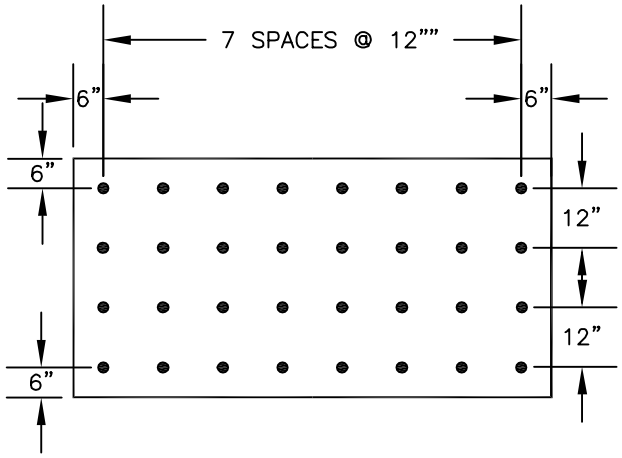

CORNERS (32)
1 FASTENER PER EVERY 1 SQ. FT.

MULE-HIDE PRODUCTS CO., INC.	**INSULATION ATTACHMENT** **17 FASTENERS PER 4' X 8' IN FIELD** **SYSTEMS:** **FULLY ADHERED**	**DETAIL NO.:** **MHT-FA-723** REVISION DATE: 01/2013

®

NOTES:

1. THESE FASTENING PATTERNS ARE TO BE USED WHEN THE PROJECT REQUIRES A FACTORY MUTUAL RATED SYSTEM. CONTACT MULE-HIDE TECHNICAL DEPARTMENT FOR APPROPRIATE USE OF THESE PATTERNS.

2. MULE-HIDE INSULATION FASTENERS AND 3" DIAMETER PLATES MUST BE USED FOR INSULATION ATTACHMENT.

3. REFER TO MULE-HIDE WIND UPLIFT RATINGS FOR APPROPRIATE FASTENER DENSITY REQUIRED.

4. FASTENER DENSITY INCREASES BASED ON THE FOLLOWING:
   - 50% FOR PERIMETERS WITH A MINIMUM OF 1 FASTENER EVERY 2 SQUARE FEET NOT TO EXCEED 1 FASTENER EVERY 1 SQUARE FEET
   - CONSTANT DENSITY OF 1 FASTENER EVERY 1 SQUARE FEET FOR CORNERS.

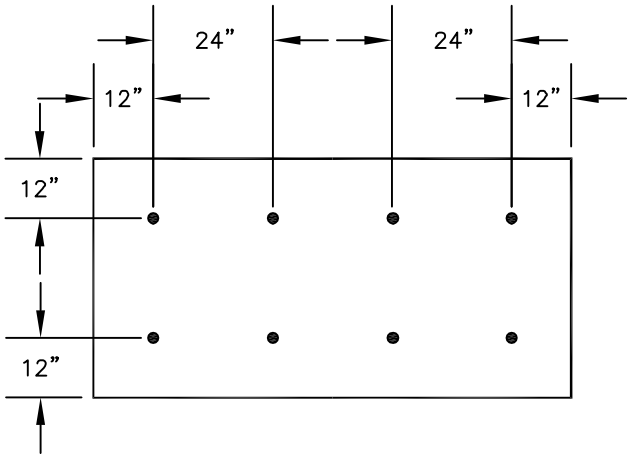

FIELD (8)
1 FASTENER PER EVERY 4 SQ. FT.

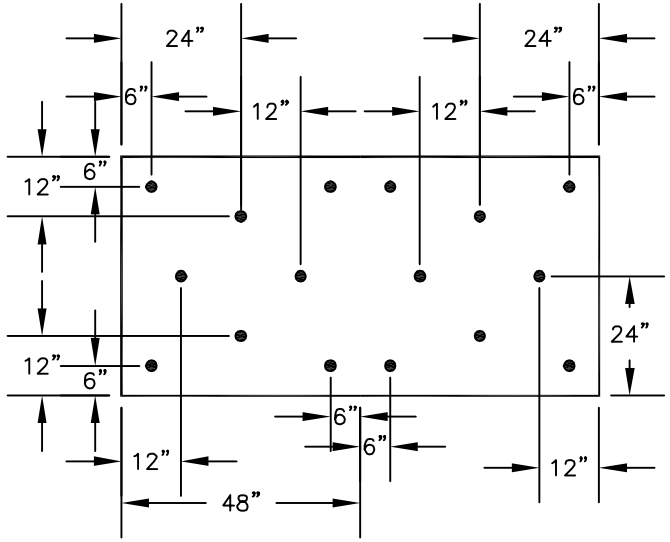

PERIMETER (16)
1 FASTENER PER EVERY 2 SQ. FT.

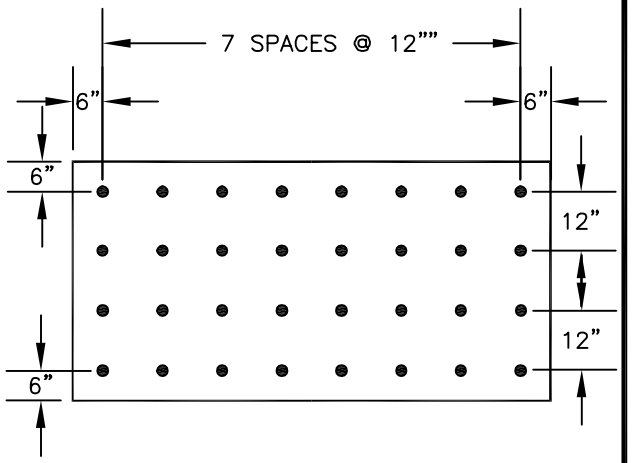

CORNERS (32)
1 FASTENER PER EVERY 1 SQ. FT.

MULE-HIDE PRODUCTS CO., INC.	**FM - 8 FIELD FASTENERS PER 4' X 8' BOARD PATTERN LAYOUT** **SYSTEMS:** **FULLY ADHERED**	**DETAIL NO.:** **MHT-FM-724** REVISION DATE: 01/2013

®

NOTES:

1. THESE FASTENING PATTERNS ARE TO BE USED WHEN THE PROJECT REQUIRES A FACTORY MUTUAL RATED SYSTEM. CONTACT MULE-HIDE TECHNICAL DEPARTMENT FOR APPROPRIATE USE OF THESE PATTERNS.

2. MULE-HIDE INSULATION FASTENERS AND 3" DIAMETER PLATES MUST BE USED FOR INSULATION ATTACHMENT.

3. REFER TO MULE-HIDE WIND UPLIFT RATINGS FOR APPROPRIATE FASTENER DENSITY REQUIRED.

4. FASTENER DENSITY INCREASES BASED ON THE FOLLOWING:
   - 50% FOR PERIMETERS WITH A MINIMUM OF 1 FASTENER EVERY 2 SQUARE FEET NOT TO EXCEED 1 FASTENER EVERY 1 SQUARE FEET
   - CONSTANT DENSITY OF 1 FASTENER EVERY 1 SQUARE FEET FOR CORNERS.

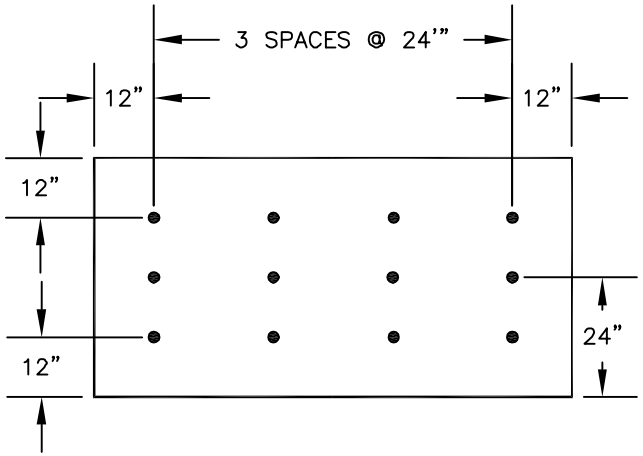

FIELD (12)
1 FASTENER PER EVERY 2.66 SQ. FT.

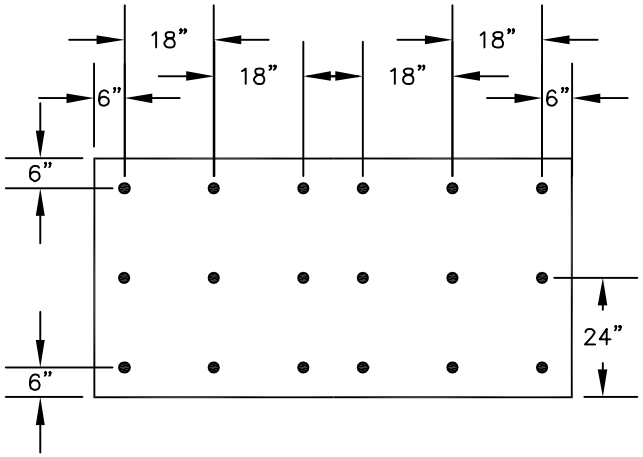

PERIMETER (18)
1 FASTENER PER EVERY 1.77 SQ. FT.

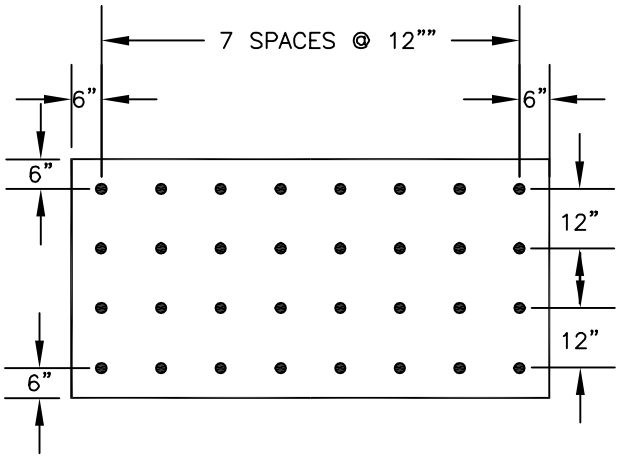

CORNERS (32)
1 FASTENER PER EVERY 1 SQ. FT.

MULE-HIDE PRODUCTS CO., INC.	**FM - 12 FIELD FASTENERS PER 4' X 8' BOARD PATTERN LAYOUT** **SYSTEMS:** **FULLY ADHERED**	**DETAIL NO.:** **MHT-FM-725** REVISION DATE: 01/2013

®

NOTES:

1. THESE FASTENING PATTERNS ARE TO BE USED WHEN THE PROJECT REQUIRES A FACTORY MUTUAL RATED SYSTEM. CONTACT MULE-HIDE TECHNICAL DEPARTMENT FOR APPROPRIATE USE OF THESE PATTERNS.

2. MULE-HIDE INSULATION FASTENERS AND 3" DIAMETER PLATES MUST BE USED FOR INSULATION ATTACHMENT.

3. REFER TO MULE-HIDE WIND UPLIFT RATINGS FOR APPROPRIATE FASTENER DENSITY REQUIRED.

4. FASTENER DENSITY INCREASES BASED ON THE FOLLOWING:
   - 50% FOR PERIMETERS WITH A MINIMUM OF 1 FASTENER EVERY 2 SQUARE FEET NOT TO EXCEED 1 FASTENER EVERY 1 SQUARE FEET
   - CONSTANT DENSITY OF 1 FASTENER EVERY 1 SQUARE FEET FOR CORNERS.

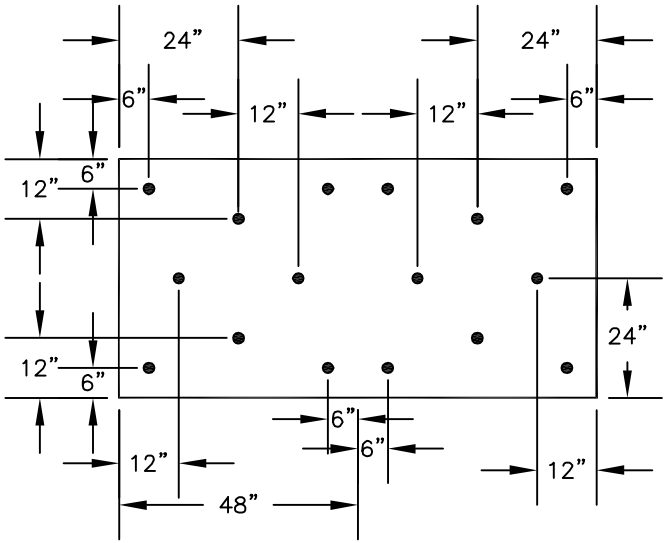

FIELD (16)
1 FASTENER PER EVERY 2 SQ. FT.

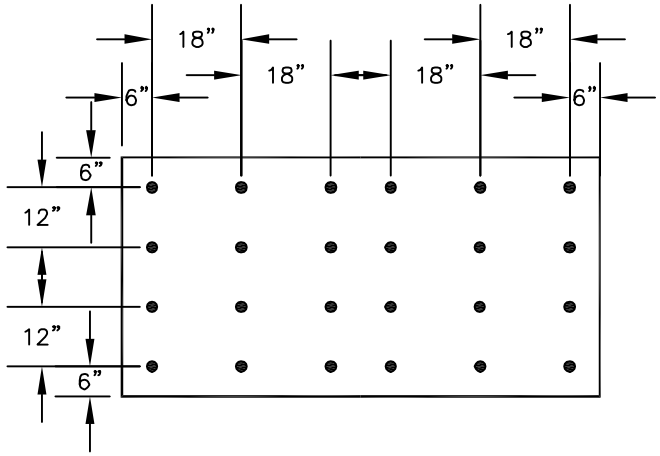

PERIMETER (24)
1 FASTENER PER EVERY 1.33 SQ. FT.

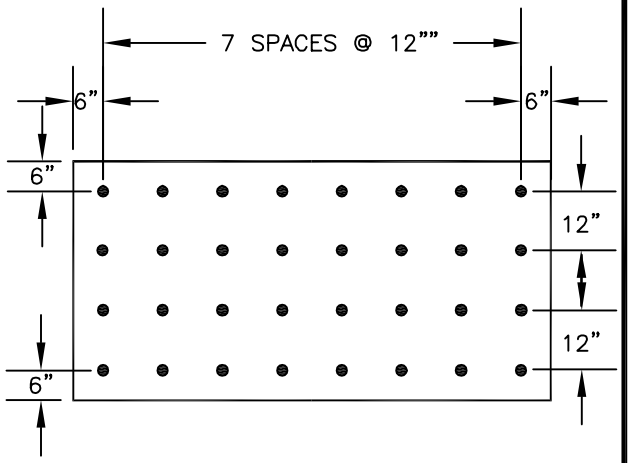

CORNERS (32)
1 FASTENER PER EVERY 1 SQ. FT.

MULE-HIDE PRODUCTS CO., INC.	**FM - 16 FIELD FASTENERS PER 4' X 8' BOARD PATTERN LAYOUT** **SYSTEMS:** **FULLY ADHERED**	**DETAIL NO.:** **MHT-FM-726** REVISION DATE: 01/2013

®

NOTES:

1. THESE FASTENING PATTERNS ARE TO BE USED WHEN THE PROJECT REQUIRES A FACTORY MUTUAL RATED SYSTEM. CONTACT MULE–HIDE TECHNICAL DEPARTMENT FOR APPROPRIATE USE OF THESE PATTERNS.

2. MULE–HIDE INSULATION FASTENERS AND 3" DIAMETER PLATES MUST BE USED FOR INSULATION ATTACHMENT.

3. REFER TO MULE–HIDE WIND UPLIFT RATINGS FOR APPROPRIATE FASTENER DENSITY REQUIRED.

4. FASTENER DENSITY INCREASES BASED ON THE FOLLOWING:
   - 50% FOR PERIMETERS WITH A MINIMUM OF 1 FASTENER EVERY 2 SQUARE FEET NOT TO EXCEED 1 FASTENER EVERY 1 SQUARE FEET
   - CONSTANT DENSITY OF 1 FASTENER EVERY 1 SQUARE FEET FOR CORNERS.

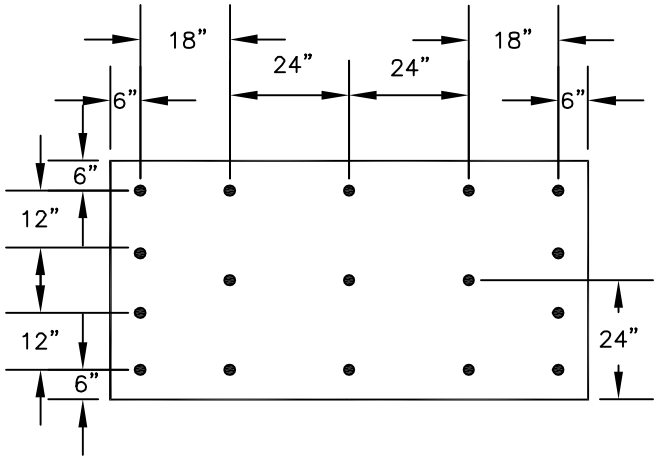

FIELD (17)
1 FASTENER PER EVERY 1.88 SQ. FT.

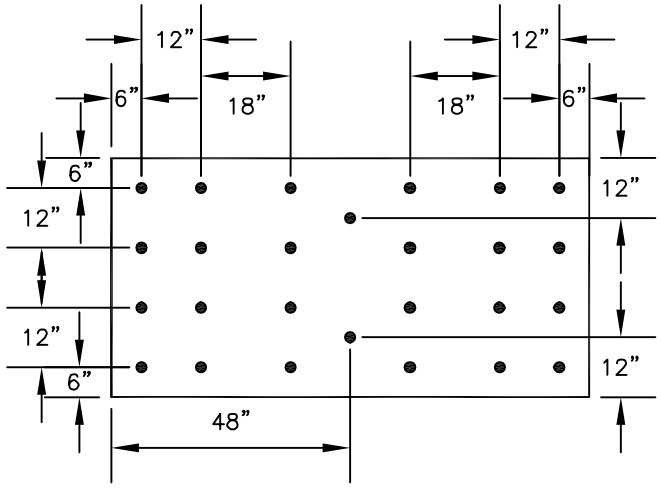

PERIMETER (26)
1 FASTENER PER EVERY 1.23 SQ. FT.

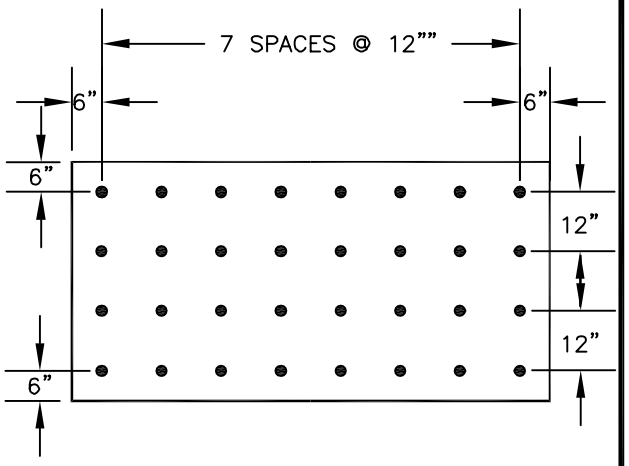

CORNERS (32)
1 FASTENER PER EVERY 1 SQ. FT.

MULE-HIDE PRODUCTS CO., INC.	**FM - 17 FIELD FASTENERS PER 4' X 8' BOARD PATTERN LAYOUT** **SYSTEMS:** **FULLY ADHERED**	**DETAIL NO.:** **MHT-FM-727** REVISION DATE: 01/2013

®

NOTES:

1. DETAILS TO BE USED IN CONJUNCTION WITH STANDARD GUIDE SPECIFICATIONS CONTAINING REQUIREMENTS FOR NAILERS, INSULATION, SLIPSHEETS, ETC.

2. ACCORDING TO PROJECT CONDITIONS, THE SPECIFIER AND/OR APPLICATOR MUST DETERMINE THE APPROPRIATE METHOD TO SECURE THE WOOD NAILER, SO AS TO MEET MULE–HIDE SPECIFICATIONS AND COMPLY WITH CURRENT FM LOSS PREVENTIONS DATA SHEET I–49.

3. SUBSTRATE STRUCTURE TO WHICH NAILER IS ATTACHED MUST BE ABLE TO RESIST A FORCE OF 200 LBS/FT. MINIMUM IN ALL DIRECTIONS.

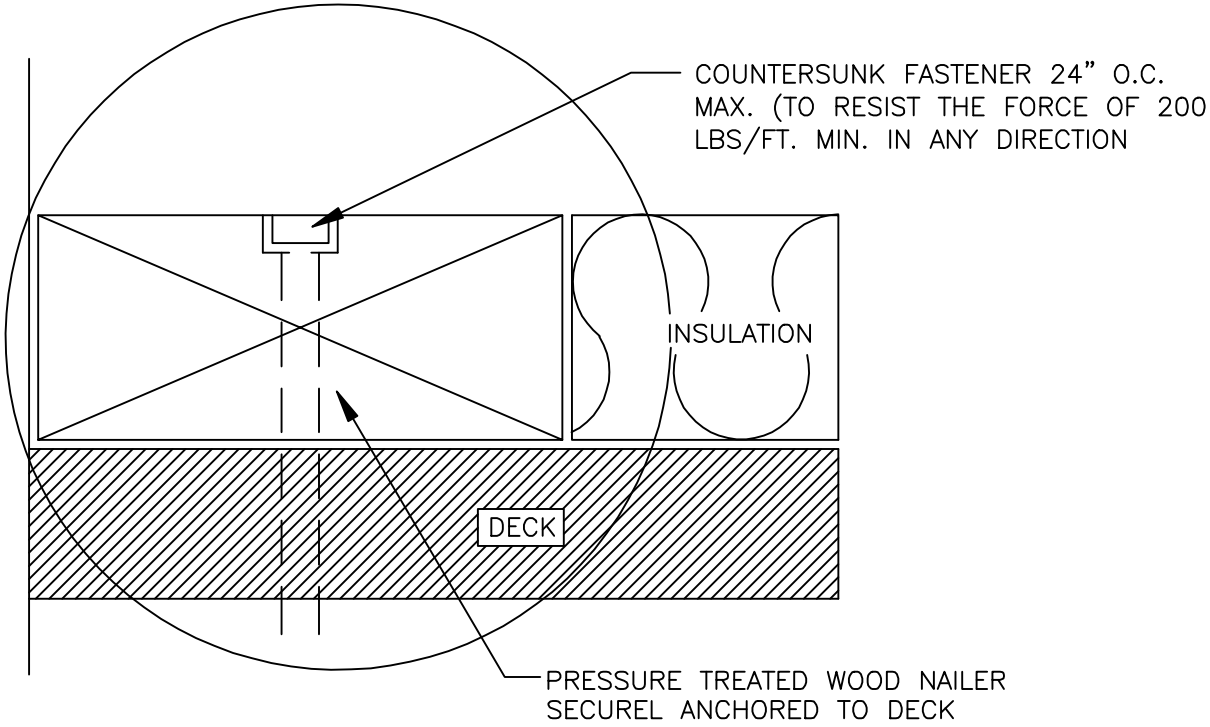

MULE-HIDE PRODUCTS CO., INC. 04/01/2007	**WOOD NAILER ATTACHMENT SYSTEMS:** **ALL PVC**	**DETAIL NO:** **MHP-100**

NOTES:

1. DETAILS TO BE USED IN CONJUNCTION WITH STANDARD GUIDE SPECIFCIATIONS CONTAINING REQUIREMENTS FOR NAILERS, INSULATION, SLIPSHEETS, ETC.

2. PVC EDGE SEALANT IS REQUIRED ON ALL CUT OR NON–ENCAPSULATED EDGES OF REINFORECED MEMBRANE. THIS INCLUDES FACTORY CUT MEMBRANE.

3. FOR COATED METAL JOINT SEE MULE–HIDE DETAIL MHP–109.

4. APPLICATOR/SPECIFIER TO DETERMINE HEIGHT REQUIRED TO PREVENT WATER FROM CASCADING OVER BUILDING EDGE.

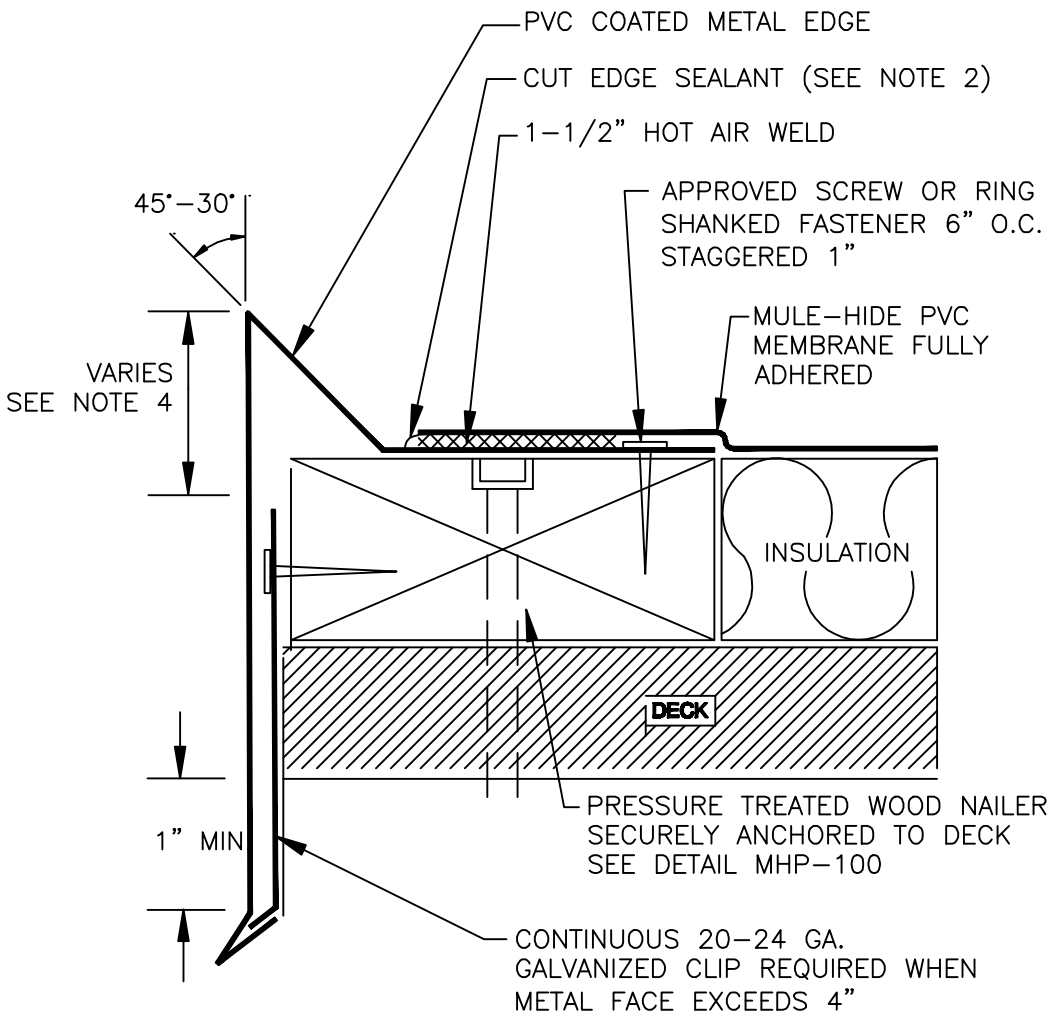

MULE-HIDE PRODUCTS CO., INC. **04/01/2007**	**PVC COATED METAL GRAVEL STOP SYSTEMS:** **FULLY ADHERED PVC**	**DETAIL NO:** **MHP-101**

NOTES:

1. DETAILS TO BE USED IN CONJUNCTION WITH STANDARD GUIDE SPECIFICATIONS CONTAINING REQUIREMENTS FOR NAILERS, INSULATION, SLIPSHEETS, ETC.

2. PVC EDGE SEALANT IS REQUIRED ON ALL CUT OR NON-ENCAPSULATED EDGES OF REINFORCED MEMBRANE. THIS INCLUDES FACTORY CUT MEMBRANE.

3. FOR COATED METAL JOINT, SEE DETAIL MHP-109.

4. PRECAUTIONS MUST BE TAKEN TO ASSURE THAT THE MINIMUM 6" WIDE MEMBRANE COVER STRIP IS NOT WELDED SOLID. A 2" WIDE UNWELDED AREA MUST BE MAINTAINED BETWEEN THE 2 WELDED EDGES OF THE COVER STRIP.

5. APPLICATOR/SPECIFIER TO DETERMINE HEIGHT REQUIRED TO PREVENT WATER FROM CASCADING OVER BUILDING EDGES.

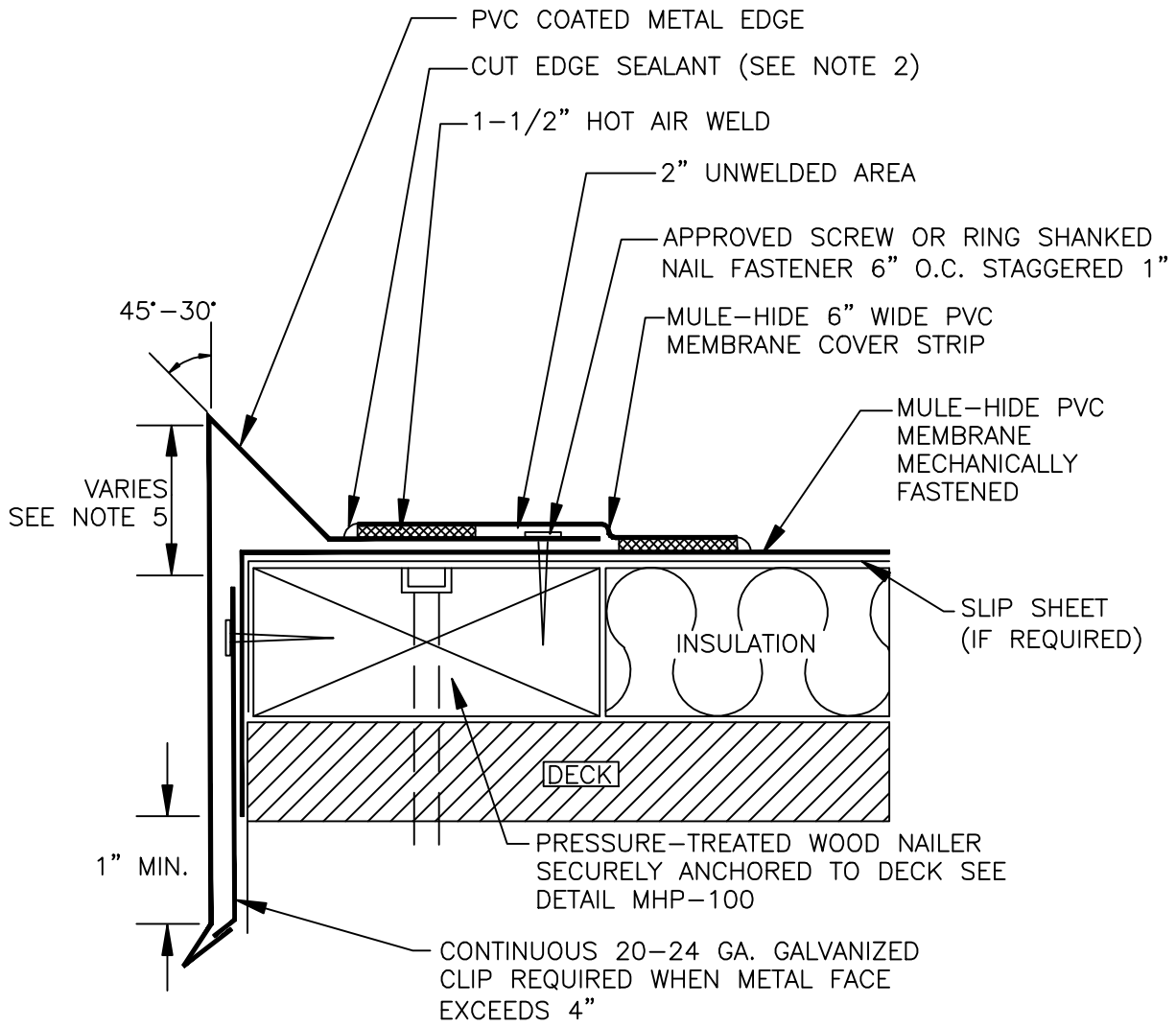

MULE-HIDE PRODUCTS CO., INC.	**PVC COATED GRAVEL STOP SYSTEMS:**	**DETAIL NO:**
04/01/2007	**MECHANICALLY FASTENED PVC**	**MHP-102**

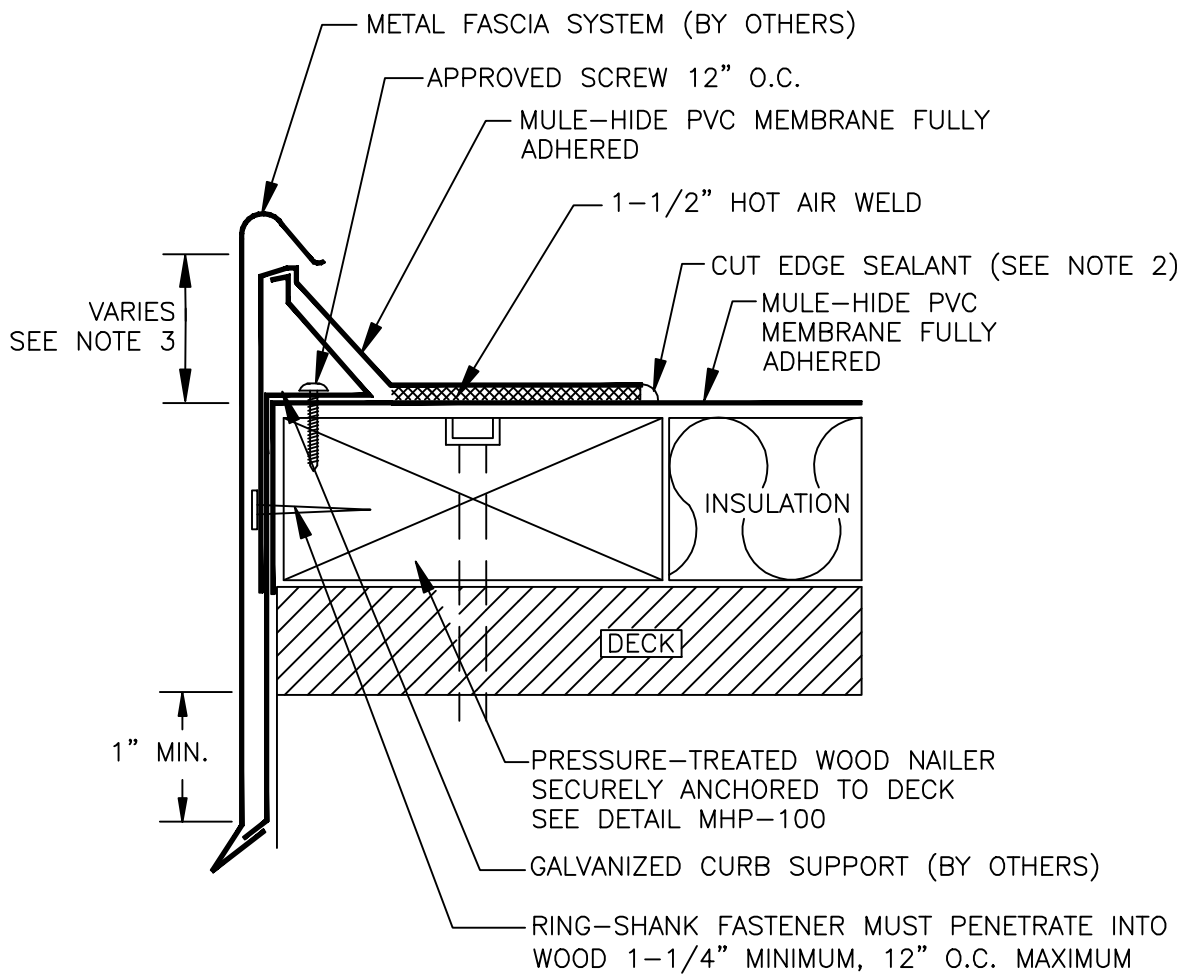

NOTES:

1. DETAILS TO BE USED IN CONJUNCTION WITH STANDARD GUIDE SPECIFICATIONS CONTAINING REQUIREMENTS FOR NAILERS, INSULATION, SLIPSHEETS, ETC.

2. PVC EDGE SEALANT IS REQUIRED ON ALL CUT OR NON-ENCAPSULATED EDGES OF REINFORCED MEMBRANE. THIS INCLUDES FACTORY CUT MEMBRANE.

3. APPLICATOR/SPECIFIER TO DETERMINE HEIGHT REQUIRED TO PREVCENT WATER FROM CASCADING OVER BUILDING EDGE.

MULE-HIDE PRODUCTS CO., INC. **04/01/2007**	**SNAP-ON FASCIA (BY OTHERS) SYSTEMS:** **FULLY ADHERED PVC**	**DETAIL NO:** **MHP-103**

NOTES:

1. DETAILS TO BE USED IN CONJUNCTION WITH STANDARD GUIDE SPECIFICATIONS CONTAINING REQUIREMENTS FOR NAILERS, INSULATION, SLIPSHEETS, ETC.

2. PVC EDGE SEALANT IS REQUIRED ON ALL CUT OR NON-ENCAPSULATED EDGES OF REINFORCED MEMBRANE. THIS INCLUDES FACTORY CUT MEMBRANE.

3. FOR COATED METAL JOINT, SEE DETAIL MHP-109

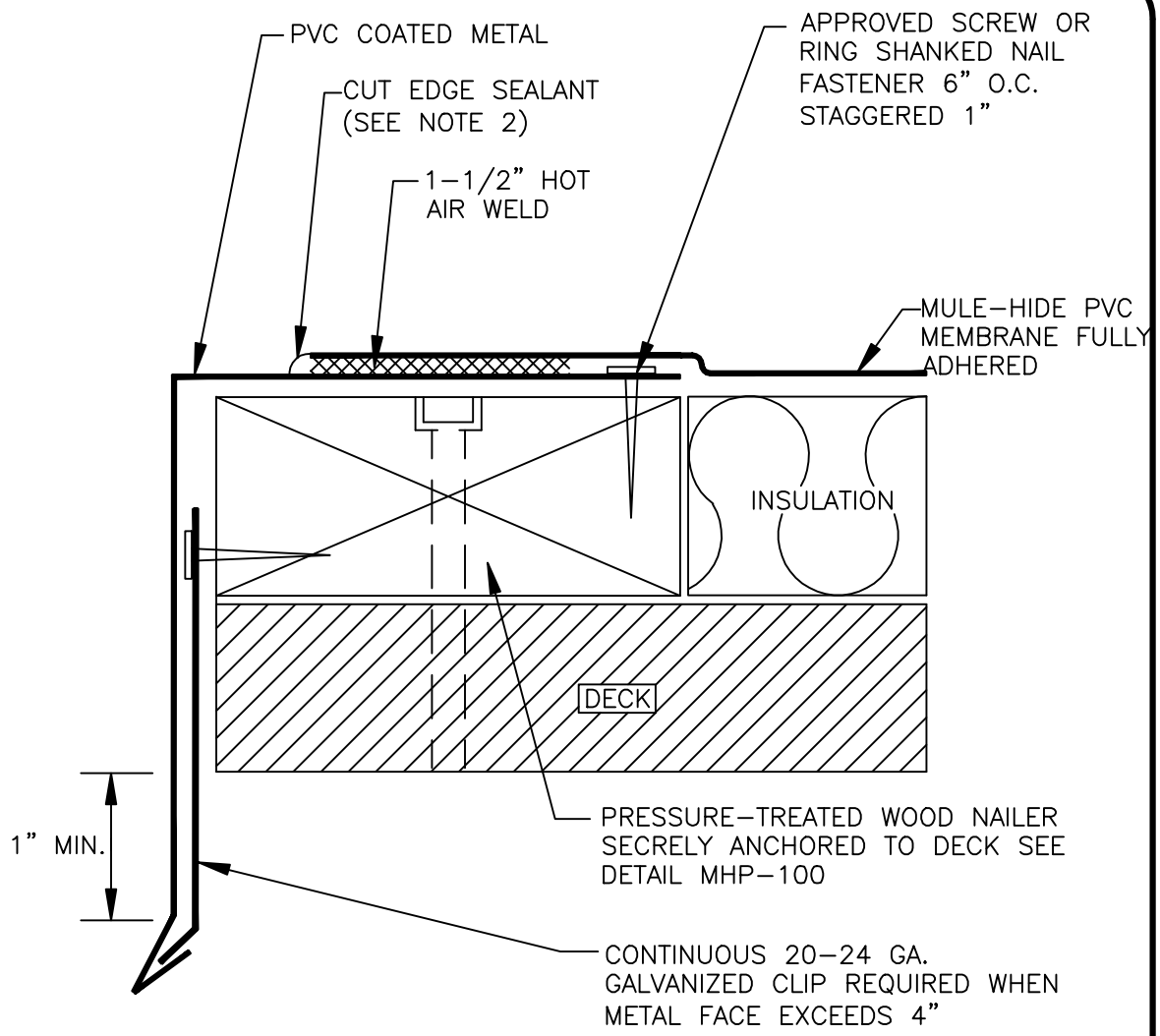

MULE-HIDE PRODUCTS CO., INC. **04/01/2007**	**DRIP EDGE SYSTEMS:** **FULLY ADHERED PVC**	**DETAIL NO:** **MHP-104**

NOTES:

1. DETAILS TO BE USED IN CONJUNCTION WITH STANDARD GUIDE SPECIFICATIONS CONTAINING REQUIREMENTS FOR NAILERS, INSULATION, SLIPSHEETS, ETC.

2. PVC EDGE SEALANT IS REQUIRED ON ALL CUT OR NON-ENCAPSULATED EDGES OF REINFORCED MEMBRANE. THIS INCLUDES FACTORY CUT MEMBRANE.

3. FOR COATED METAL JOINT, SEE DETAIL MHP-109.

4. PRECAUTIONS MUST BE TAKEN TO ASSURE THAT THE MINIMUM 6" WIDE MEMBRANE COVER STRIP IS NOT WELDED SOLID. A 3" WIDE UNWELDED AREA MUST BE MAINTAINED BETWEEN THE 2 WELDED EDGES OF THE COVER STRIP.

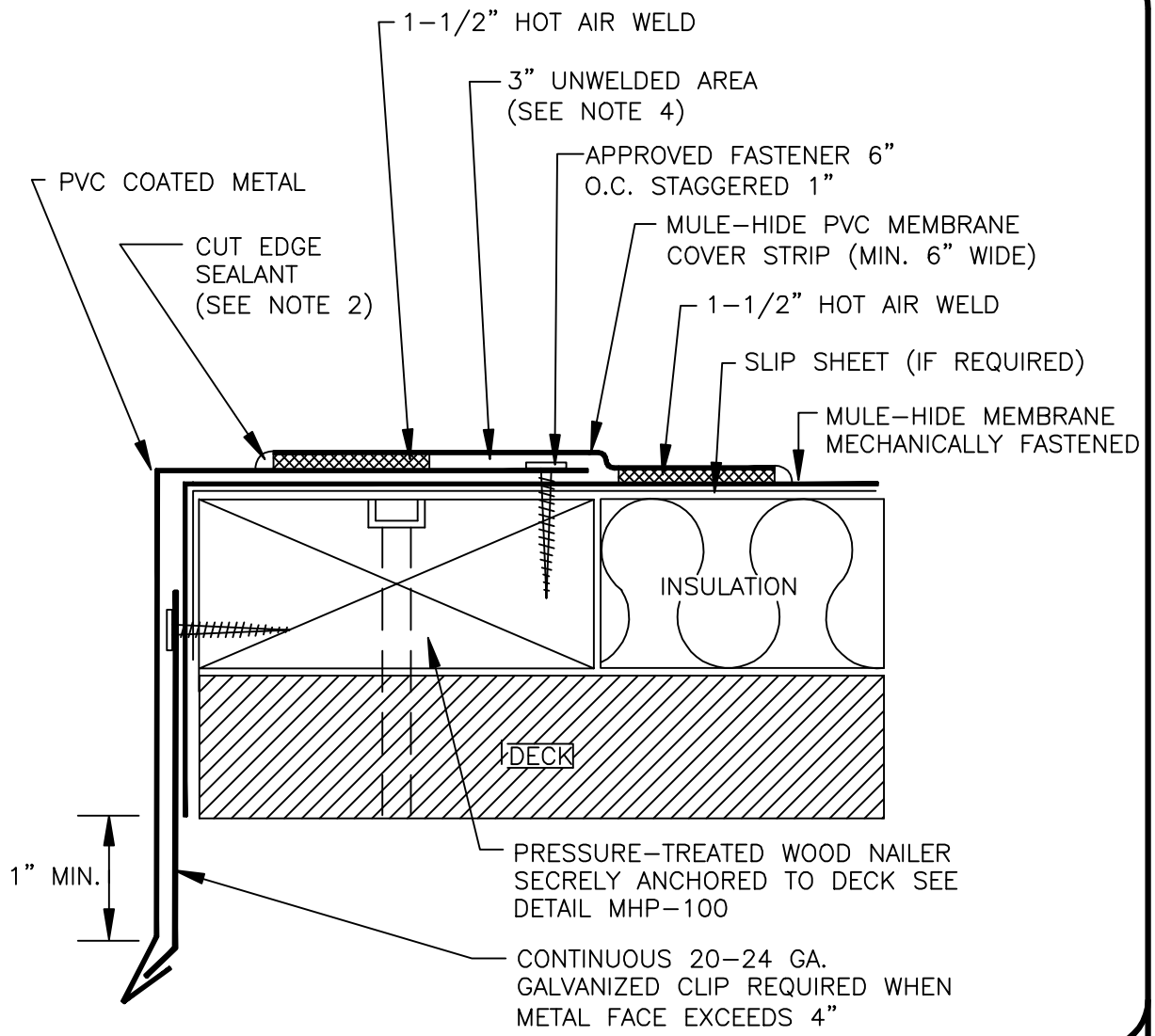

MULE-HIDE PRODUCTS CO., INC.	**DRIP EDGE SYSTEMS:**	**DETAIL NO:**
04/01/2007	**MECHANICALLY FASTENED PVC**	**MHP-105**

NOTES:

1. DETAILS TO BE USED IN CONJUNCTION WITH STANDARD GUIDE SPECIFCIATIONS CONTAINING REQUIREMENTS FOR NAILERS, INSULATION, SLIPSHEETS, ETC.

2. PVC EDGE SEALANT IS REQUIRED ON ALL CUT OR NON–ENCAPSULATED EDGES OF REINFORECED MEMBRANE. THIS INCLUDES FACTORY CUT MEMBRANE.

3. FOR COATED METAL JOINT SEE MULE–HIDE DETAIL MHP–109.

4. ACCORDING TO PROJECT CONDITIONS, THE SPECIFIER AND/OR APPLICATOR MUST DETERMINE THE APPROPRIATE GUTTER DESIGN AND SECUREMENT METHOD.

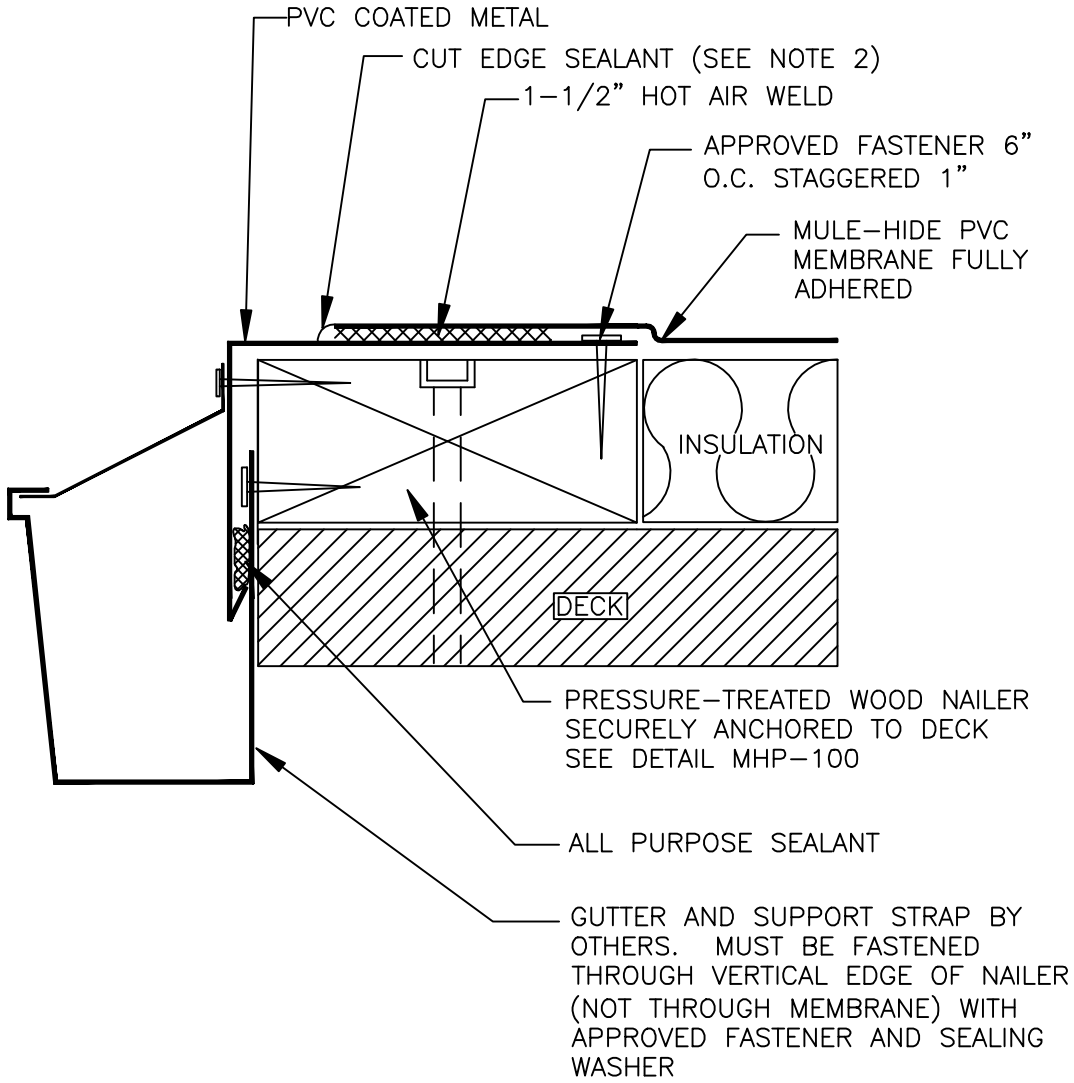

MULE-HIDE PRODUCTS CO., INC. **04/01/2007**	**GUTTER TERMINATION SYSTEMS:** **FULLY ADHERED PVC**	**DETAIL NO:** **MHP-106**

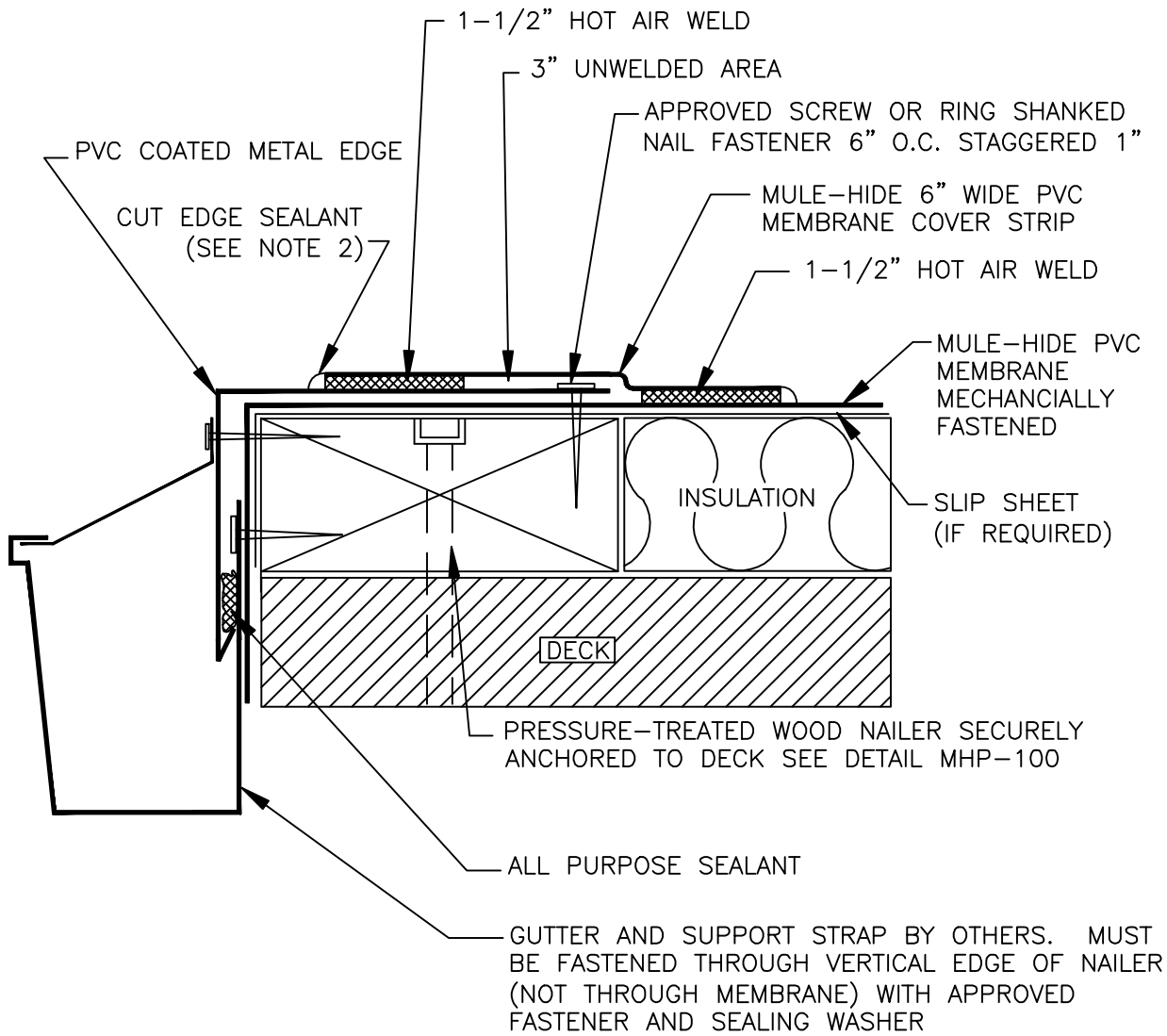

NOTES:

1. DETAILS TO BE USED IN CONJUNCTION WITH STANDARD GUIDE SPECIFCIATIONS CONTAINING REQUIREMENTS FOR NAILERS, INSULATION, SLIPSHEETS, ETC.

2. PVC EDGE SEALANT IS REQUIRED ON ALL CUT OR NON-ENCAPSULATED EDGES OF REINFORECED MEMBRANE. THIS INCLUDES FACTORY CUT MEMBRANE.

3. FOR COATED METAL JOINT SEE MULE-HIDE DETAIL MHP-109.

4. ACCORDING TO PROJECT CONDITIONS, THE SPECIFIER AND/OR APPLICATOR MUST DETERMINE THE APPROPRIATE GUTTER DESIGN AND SECUREMENT METHOD.

MULE-HIDE PRODUCTS CO., INC.	**GUTTER TERMINATION SYSTEMS:**	**DETAIL NO:**
04/01/2007	**MECHANICALLY FASTEND PVC**	**MHP-107**

NOTES:

1. DETAILS TO BE USED IN CONJUNCTION WITH STANDARD GUIDE SPECIFCIATIONS CONTAINING REQUIREMENTS FOR NAILERS, INSULATION, SLIPSHEETS, ETC.

2. PVC EDGE SEALANT IS REQUIRED ON ALL CUT OR NON–ENCAPSULATED EDGES OF REINFORECED MEMBRANE. THIS INCLUDES FACTORY CUT MEMBRANE.

3. A HEAT GUN WILL FACILITATE WELDING AT THE METAL BENDS

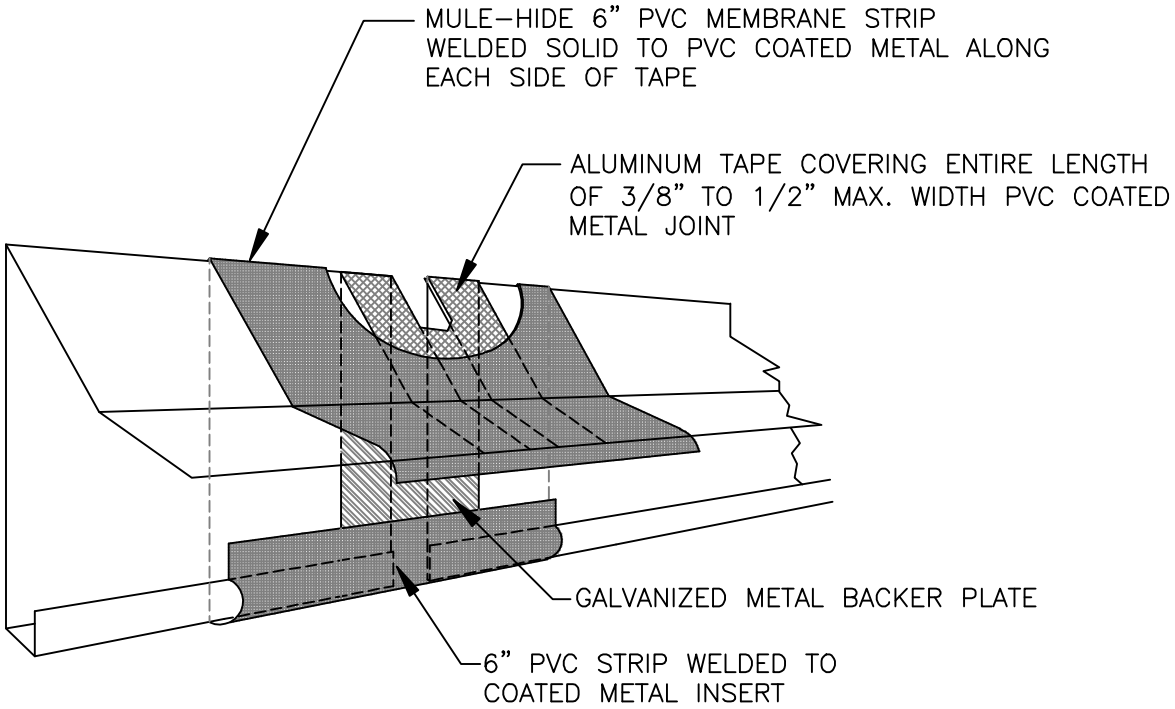

MULE-HIDE PRODUCTS CO., INC. **04/01/2007**	**COATED METAL BUTT JOINT** **SYSTEMS:** **ALL PVC**	**DETAIL NO:** **MHP-108**

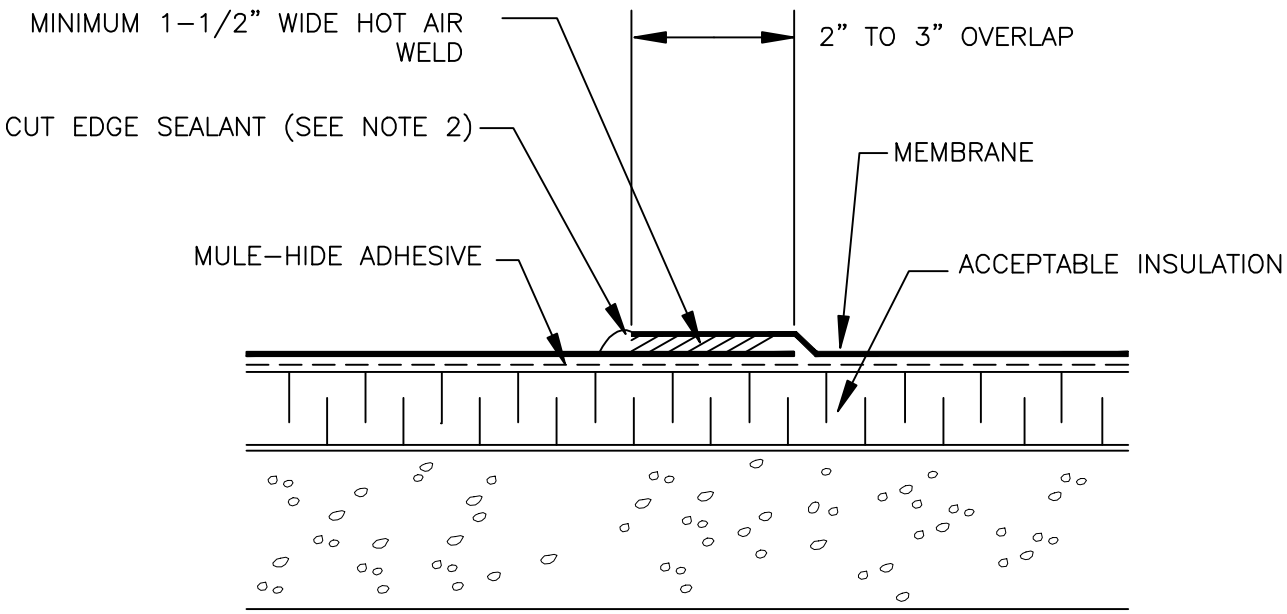

NOTES:

1. DETAILS TO BE USED IN CONJUNCTION WITH STANDARD GUIDE SPECIFCIATIONS CONTAINING REQUIREMENTS FOR NAILERS, INSULATION, SLIPSHEETS, ETC.

2. PVC EDGE SEALANT IS REQUIRED ON ALL CUT OR NON–ENCAPSULATED EDGES OF REINFORECED MEMBRANE. THIS INCLUDES FACTORY CUT MEMBRANE.

MULE-HIDE PRODUCTS CO., INC.	**LAP CROSS SECTION**	**DETAIL NO:**
04/01/2007	**SYSTEMS:**	**MHP-110**
	FULLY ADHERED PVC	

NOTES:

1. DETAILS TO BE USED IN CONJUNCTION WITH STANDARD GUIDE SPECIFCIATIONS CONTAINING REQUIREMENTS FOR NAILERS, INSULATION, SLIPSHEETS, ETC.

2. PVC EDGE SEALANT IS REQUIRED ON ALL CUT OR NON–ENCAPSULATED EDGES OF REINFORECED MEMBRANE. THIS INCLUDES FACTORY CUT MEMBRANE.

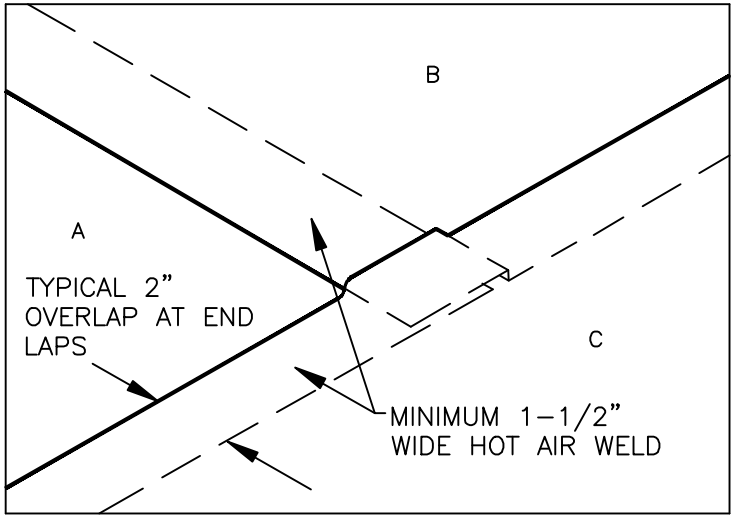

POSITION SHEETS AND HOT AIR WELD THE MEMBRANE A MINIMUM OF 1–1/2" INCHES.

.050" (1.270 mm) OR .060" (1.524 mm) THICK MEMBRANES

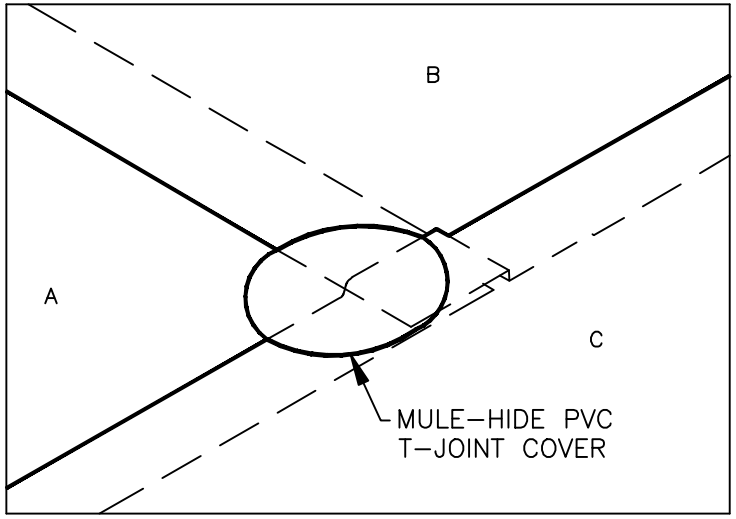

INSTALL A MULE–HIDE T–JOINT COVER CENTERED OVER SPLICE INTERSECTION ("T–JOINT") AS SHOWN.

.080" (2.032 mm) THICK MEMBRANE ONLY

MULE-HIDE PRODUCTS CO., INC. **04/01/2007**	**SEAM INTERSECTION SYSTEMS:** **FULLY ADHERED PVC**	**DETAIL NO:** **MHP-111**

NOTES:

1. DETAILS TO BE USED IN CONJUNCTION WITH STANDARD GUIDE SPECIFCIATIONS CONTAINING REQUIREMENTS FOR NAILERS, INSULATION, SLIPSHEETS, ETC.

2. PVC EDGE SEALANT IS REQUIRED ON ALL CUT OR NON–ENCAPSULATED EDGES OF REINFORECED MEMBRANE. THIS INCLUDES FACTORY CUT MEMBRANE.

3. REFER TO SPECIFICATIONS FOR ACCEPTABLE FASTENERS FOR OTHER DECK TYPES. IF A FACTORY MUTUAL RATING IS REQUIRED, REFER TO MULE–HIDE CODE APPROVAL GUIDE FOR SPECIFIC REQUIREMENTS.

4. POSITION 2.4" SEAM PLATES BEYOND NON–REINFORCED ENCAPSULATED EDGE.

5. REFER TO MULE–HIDE UPLIFT RATINGS FOR APPROPRIATE FASTENER SIZE, AND SPACING.

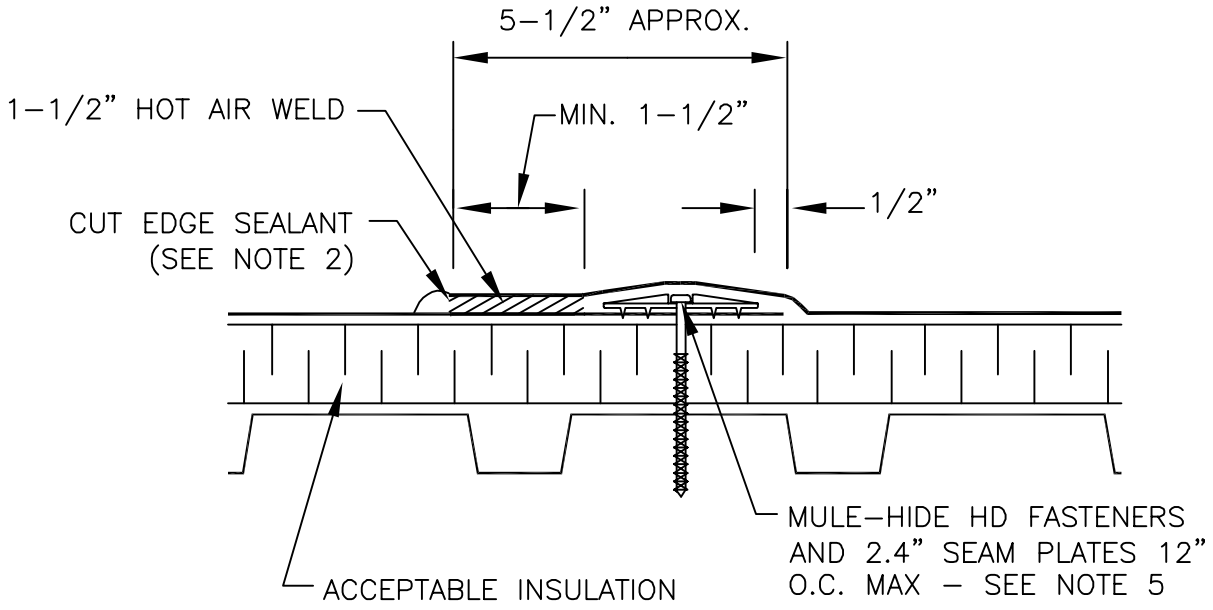

MULE-HIDE PRODUCTS CO., INC. 2010	***LAP CROSS SECTION*** ***SYSTEMS:*** ***MECHANICALLY FASTENED PVC***	***DETAIL NO:*** ***MHP-112***

NOTE:

1. DETAILS TO BE USED IN CONJUNCTION WITH STANDARD GUIDE SPECIFCIATIONS CONTAINING REQUIREMENTS FOR NAILERS, INSULATION, SLIPSHEETS, ETC.

2. PVC EDGE SEALANT IS REQUIRED ON ALL CUT OR NON-ENCAPSULATED EDGES OF REINFORECED MEMBRANE. THIS INCLUDES FACTORY CUT MEMBRANE.

3. MULE-HIDE HD FASTENERS AND 2.4" SEAM PLATES ARE REQUIRED OVER STEEL, CONCRETE, AND WOOD DECKS. REFER TO SPECIFICATIONS FOR ACCEPTABLE FASTENERS AND PLATES FOR OTHER DECK TYPES.

4. POSITION SEAM FASTENING PLATES BEYOND NON-REINFORCED ENCAPSULATED EDGE.

5. REFER TO MULE-HIDE UPLIFT RATINGS FOR APPROPRIATE FASTENER SIZE AND SPACING.

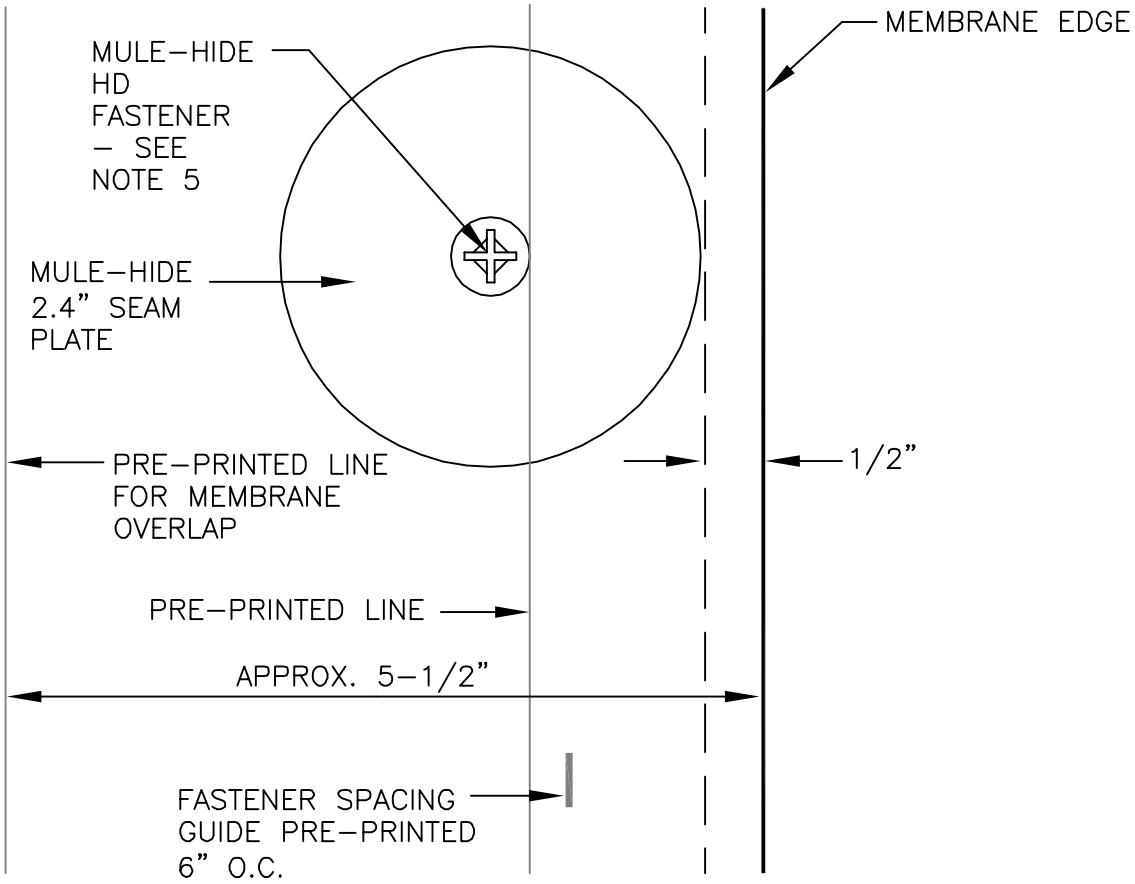

MULE-HIDE PRODUCTS CO., INC. 2010	***PLATE AND FASTENER PLACEMENT SYSTEMS:*** ***MECHANICALLY FASTENED PVC***	***DETAIL NO:*** ***MHP-113***

NOTES:

1. DETAILS TO BE USED IN CONJUNCTION WITH STANDARD GUIDE SPECIFCIATIONS CONTAINING REQUIREMENTS FOR NAILERS, INSULATION, SLIPSHEETS, ETC.

2. PVC EDGE SEALANT IS REQUIRED ON ALL CUT OR NON–ENCAPSULATED EDGES OF REINFORECED MEMBRANE. THIS INCLUDES FACTORY CUT MEMBRANE.

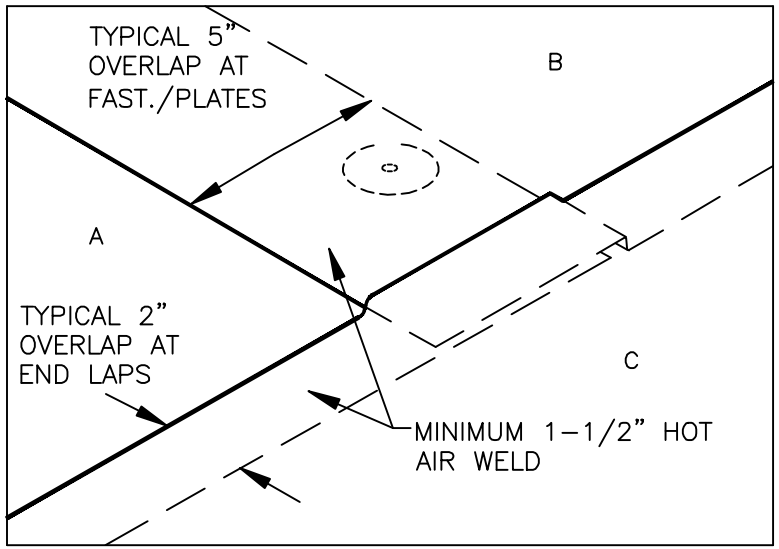

POSITION SHEETS AND HOT AIR WELD THE MEMBRANE A MINIMUM OF 1–1/2".

.050" (1.270 mm) OR .060" (1.524 mm) THICK MEMBRANES

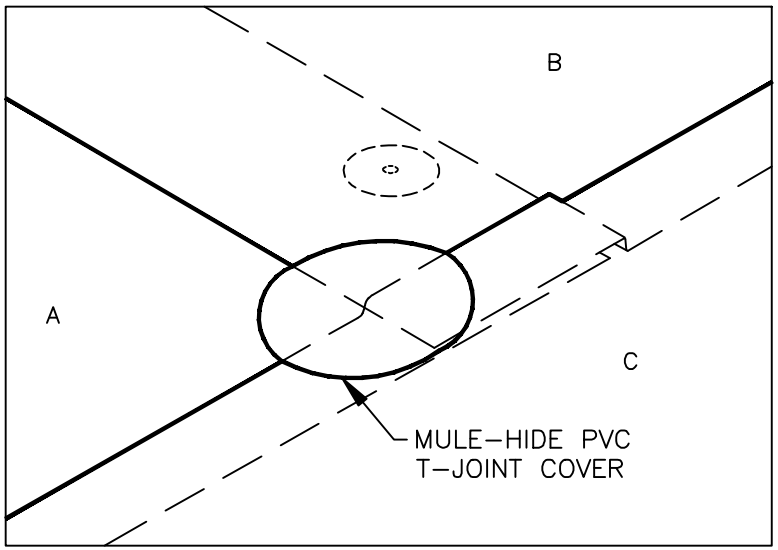

INSTALL A MULE–HIDE PVC T–JOINT COVER CENTERED OVER SPLICE INTERSECTION ("T–JOINT") AS SHOWN.

.080" (2.032 mm) THICK MEMBRANE ONLY

MULE-HIDE PRODUCTS CO., INC. **04/01/2007**	**SEAM INTERSECTION SYSTEMS:** **MECHANICALLY FASTENED PVC**	**DETAIL NO:** **MHP-114**

NOTES:

1. DETAILS TO BE USED IN CONJUNCTION WITH STANDARD GUIDE SPECIFCIATIONS CONTAINING REQUIREMENTS FOR NAILERS, INSULATION, SLIPSHEETS, ETC.

2. PVC EDGE SEALANT IS REQUIRED ON ALL CUT OR NON-ENCAPSULATED EDGES OF REINFORECED MEMBRANE. THIS INCLUDES FACTORY CUT MEMBRANE.

3. POSITION SEAM PLATES 1/2" TO 1" FROM EDGE OF DECK MEMBRANE.

4. SEAM PLATES CAN BE INSTALLED VERTICALLY.

5. REFER TO MULE-HIDE UPLIFT RATINGS FOR APPROPRIATE FASTENER SIZE, AND SPACING.

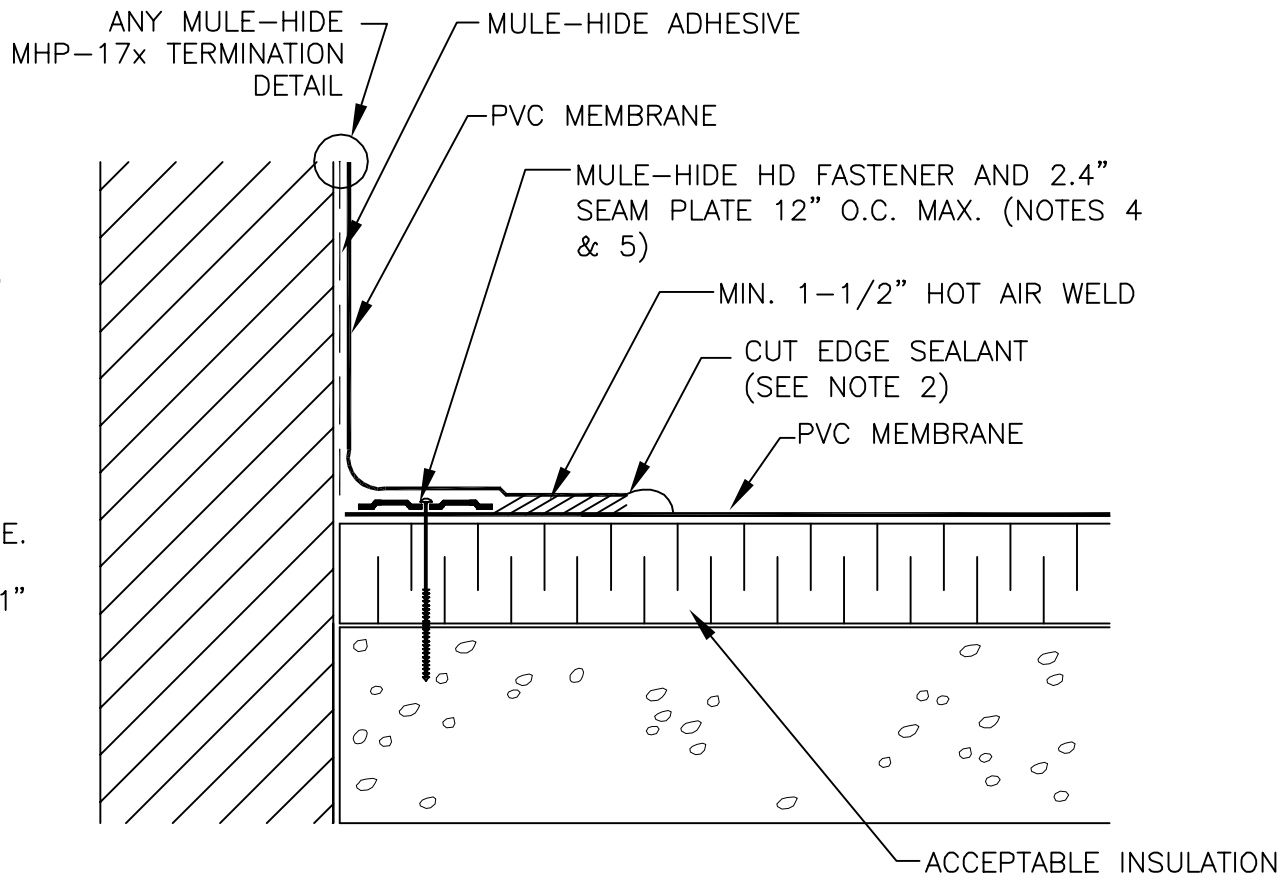

MULE-HIDE PRODUCTS CO., INC. 2010	***PARAPET FLASHING SYSTEMS:*** ***ALL PVC***	***DETAIL NO:*** ***MHP-120***

NOTES:

1. DETAILS TO BE USED IN CONJUNCTION WITH STANDARD GUIDE SPECIFCIATIONS CONTAINING REQUIREMENTS FOR NAILERS, INSULATION, SLIPSHEETS, ETC.

2. PVC EDGE SEALANT IS REQUIRED ON ALL CUT OR NON-ENCAPSULATED EDGES OF REINFORECED MEMBRANE. THIS INCLUDES FACTORY CUT MEMBRANE.

3. A COUNTERFLASHING TERMINATION MAY BE USED IN LIEU OF METAL CAP FLASHING. REFER TO MULE-HIDE DETAIL MHP-171.

4. PLACE A LAYER OF MULE-HIDE PVC MEMBRANE UNDER THE METAL CAP TO PROTECT AGAINST MOISTURE INFILTRATION AT JOINTS.

5. DUCT TAPE MAY BE SUBSTITUTED FOR FOIL TAPE.

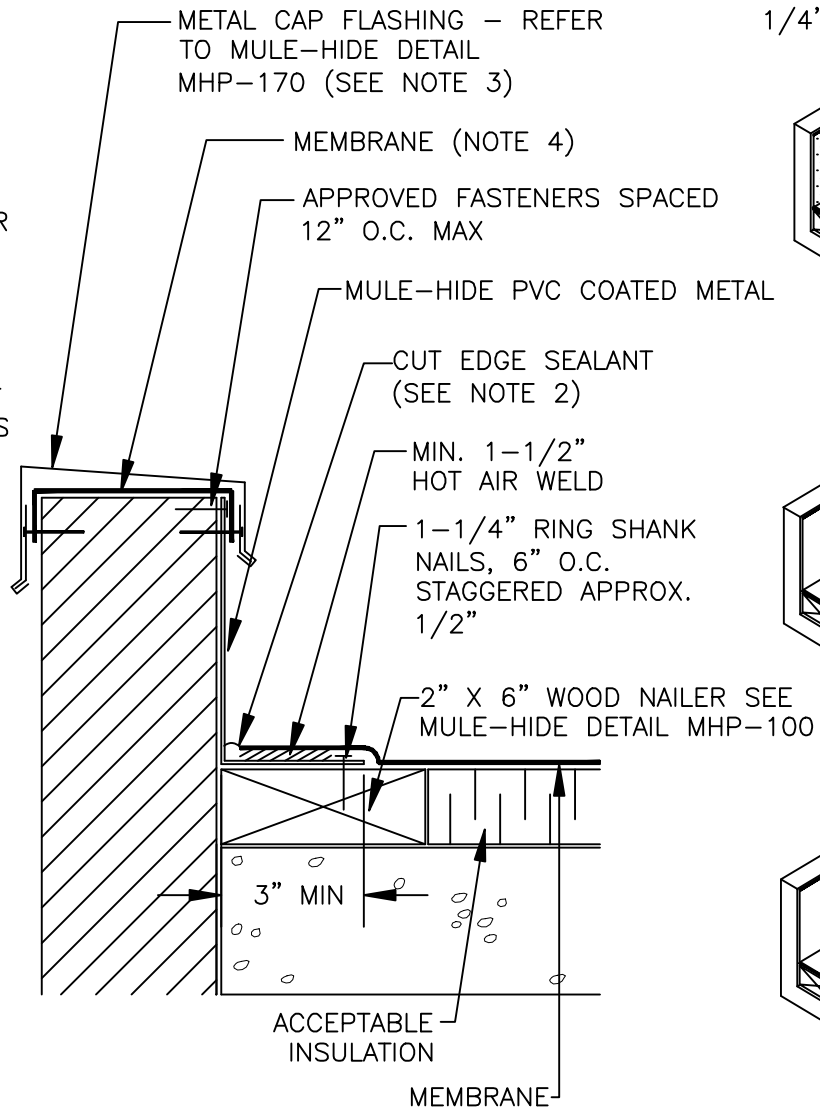

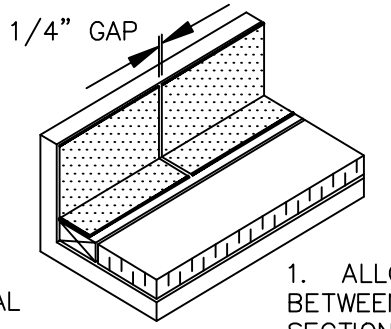

1. ALLOW 1/4" GAP BETWEEN ADJOINING SECTIONS OF MULE-HIDE PVC COATED METAL.

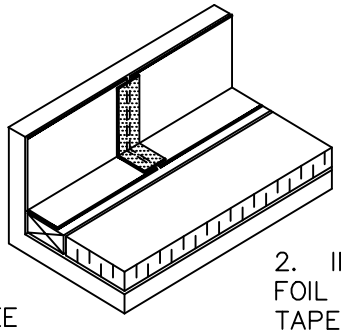

2. INSTALL 2" WIDE FOIL TAPE OR DUCT TAPE OVER JOINT IN MULE-HIDE PVC COATED METAL.

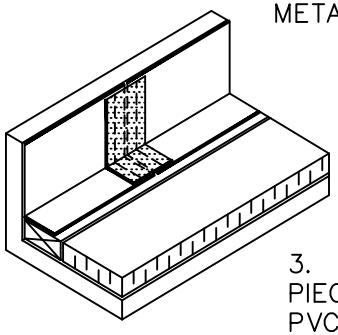

3. HEAT WELD 6" WIDE PIECE OF NON-REINF. PVC MEMBRANE OVER JOINT.

MULE-HIDE PRODUCTS CO., INC. **04/01/2007**	**PVC COATED WALL FLASHING SYSTEMS:** **ALL PVC**	**DETAIL NO:** **MHP-121**

NOTES:

1. DETAILS TO BE USED IN CONJUNCTION WITH STANDARD GUIDE SPECIFCIATIONS CONTAINING REQUIREMENTS FOR NAILERS, INSULATION, SLIPSHEETS, ETC.

2. PVC EDGE SEALANT IS REQUIRED ON ALL CUT OR NON–ENCAPSULATED EDGES OF REINFORECED MEMBRANE. THIS INCLUDES FACTORY CUT MEMBRANE.

3. FLASHING MEMBRANE FASTENED APPROXIMATELY 12" ON CENTER UNDER COUNTERFLASHING. IF FASTENER PENETRATES METAL COUNTERFLASHING, USE NEOPRENE WASHER OR APPLY WATER CUT–OFF MASTIC UNDER COUNTERFLASHING OR CAULK FASTENER HEAD.

4. FOR CORNER FLASHING, REFER TO APPLICABLE MULE–HIDE DETAIL MHP–180 OR MHP–181.

5. REFER TO MULE–HIDE UPLIFT RATINGS FOR APPROPRIATE FASTENER SIZE, AND SPACING.

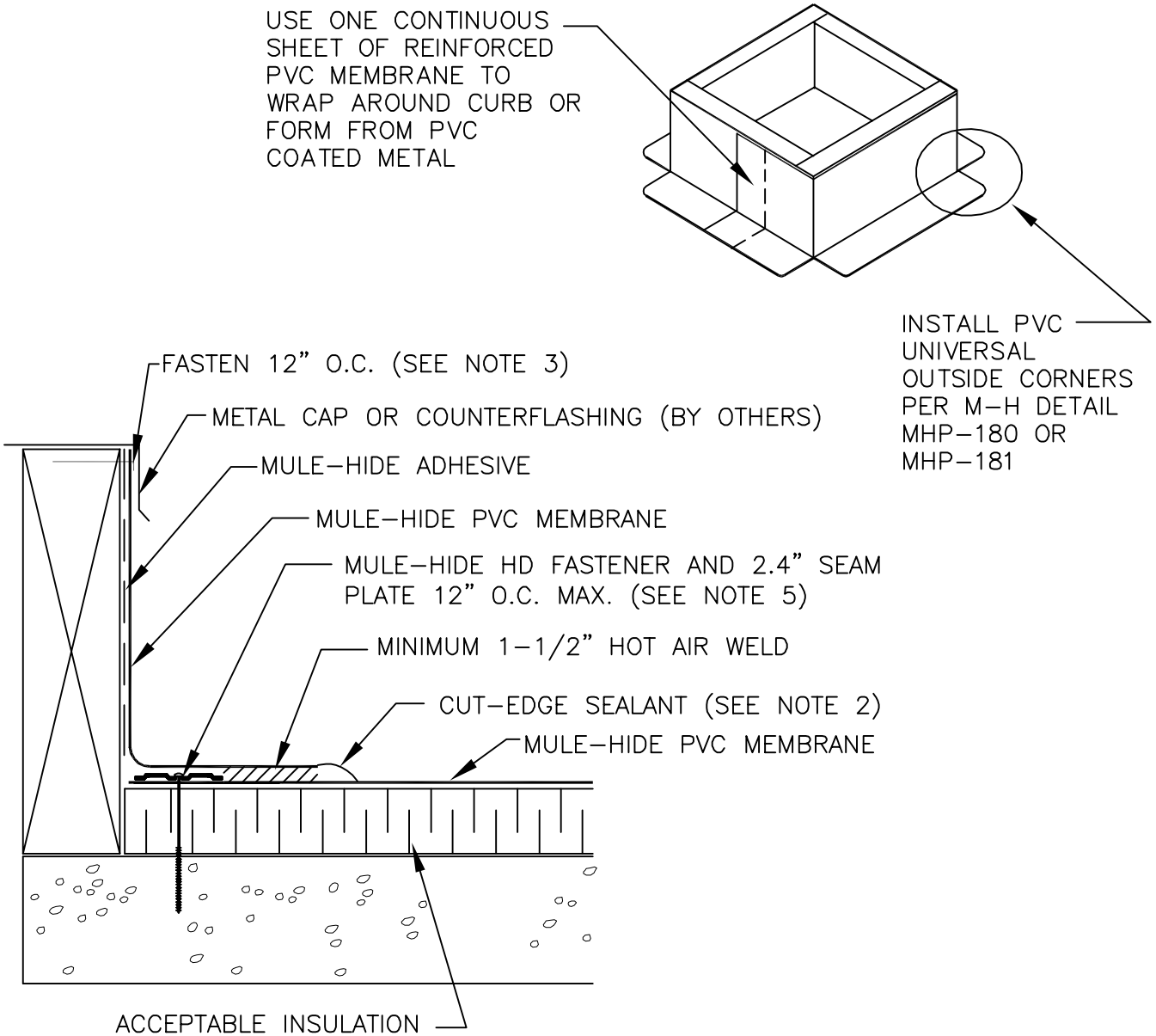

MULE-HIDE PRODUCTS CO., INC. 2010	***CURB FLASHING SYSTEMS: ALL PVC***	***DETAIL NO: MHP-122***

NOTE:

1. DETAILS TO BE USED IN CONJUNCTION WITH STANDARD GUIDE SPECIFCIATIONS CONTAINING REQUIREMENTS FOR NAILERS, INSULATION, SLIPSHEETS, ETC.

2. PVC EDGE SEALANT IS REQUIRED ON ALL CUT OR NON–ENCAPSULATED EDGES OF REINFORECED MEMBRANE. THIS INCLUDES FACTORY CUT MEMBRANE.

3. PVC COATED METAL FLASHING FASTENED APPROXIMATELY 12" ON CENTER UNDER COUNTERFLASHING. IF FASTENER PENETRATES METAL COUNTERFLASHING, USE NEOPRENE WASHER OR APPLY WATER CUT–OFF MASTIC UNDER COUNTERFLASHING OR CAULK FASTENER HEAD.

4. DUCT TAPE MAY BE SUBSTITUTED FOR FOIL TAPE.

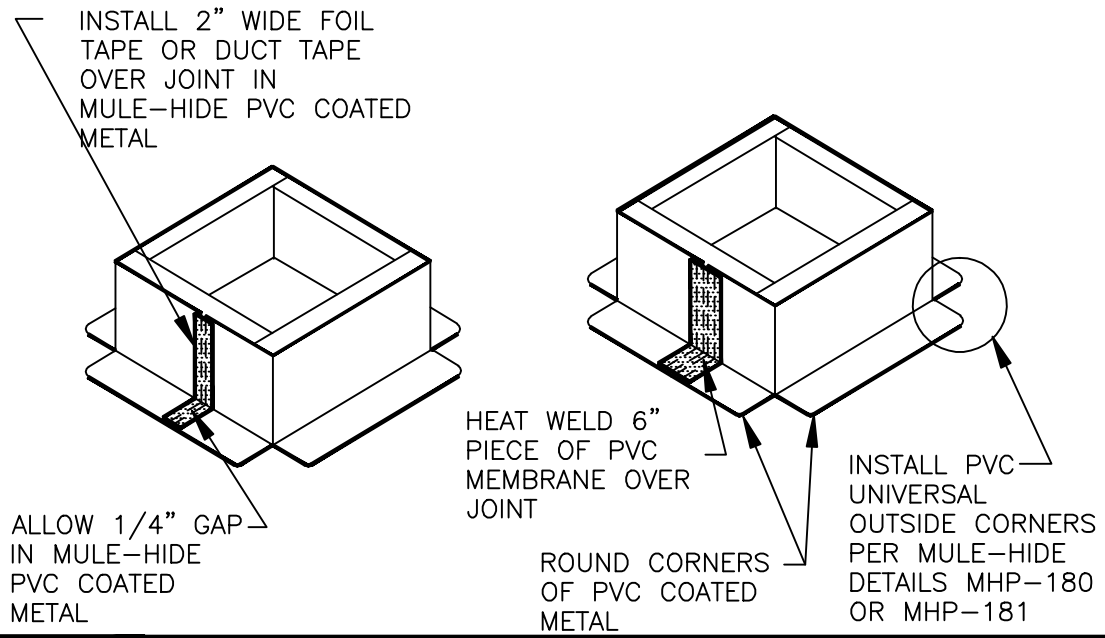

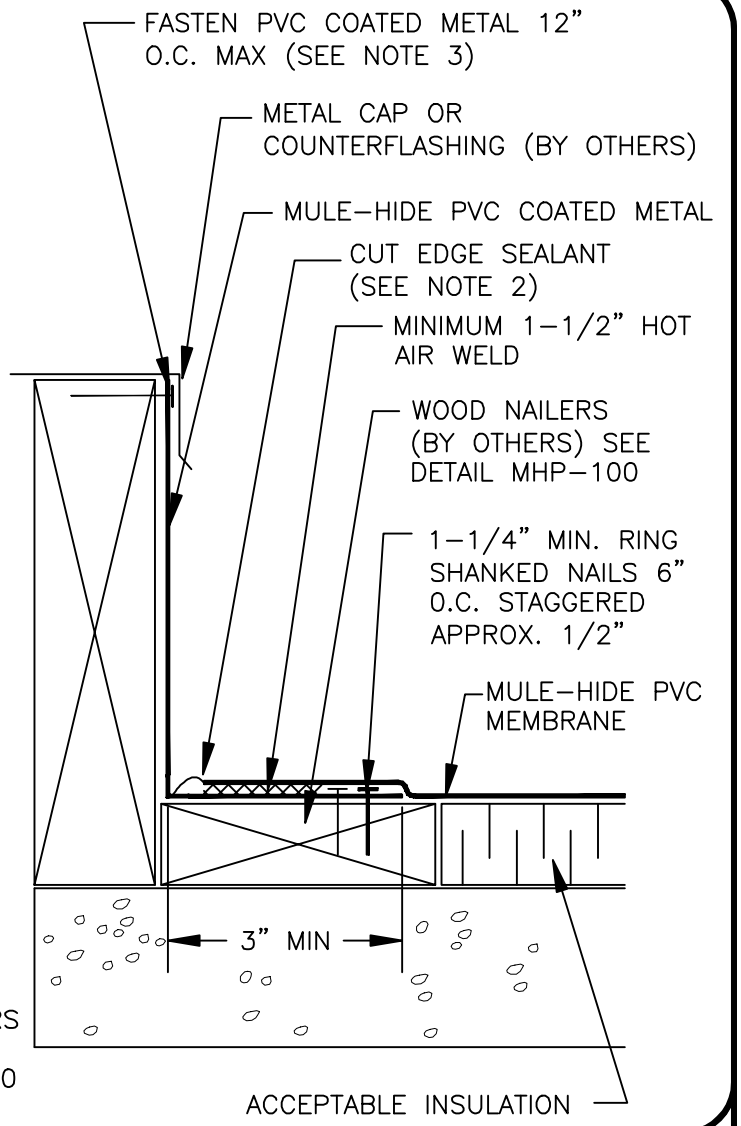

MULE-HIDE PRODUCTS CO., INC. **04/01/2007**	**PVC COATED METAL CURB FLASHING** **SYSTEMS:** **ALL PVC**	**DETAIL NO:** **MHP-123**

NOTES:

1. DETAILS TO BE USED IN CONJUNCTION WITH STANDARD GUIDE SPECIFCIATIONS CONTAINING REQUIREMENTS FOR NAILERS, INSULATION, SLIPSHEETS, ETC.

2. PVC EDGE SEALANT IS REQUIRED ON ALL CUT OR NON–ENCAPSULATED EDGES OF REINFORECED MEMBRANE. THIS INCLUDES FACTORY CUT MEMBRANE.

3. REMOVE ALL LEAD AND OTHER FLASHING.

4. ALL BOLTS AND CLAMPS MUST BE IN PLACE TO PROVIDE CONSTANT COMPRESSION ON WATER CUT–OFF MASTIC.

5. CUT THE MEMBRANE SO IT EXTENDS A MINIMUM OF 1/2" FROM THE ATTACHMENT POINTS OF THE DRAIN CLAMPING RING.

6. FOR DRAIN SUMPS WITH SLOPES GREATER THAN 3" IN 12" REFER TO MULE–HIDE DETAIL MHP–131 OR MHP–132.

7. IT IS PREFERRED TO LOCATE SPLICES AT LEAST 6" OUTSIDE DRAIN SUMP. IF SPLICES EXTEND UNDER CLAMPING RING, ENTIRE SPLICE OVERLAP MUST BE HOT AIR WELDED.

FOR DRAINS WITH TAPERED INSULATION AT DRAIN SUMP LESS THAN 3 INCHES TO 1 HORIZONTAL FOOT

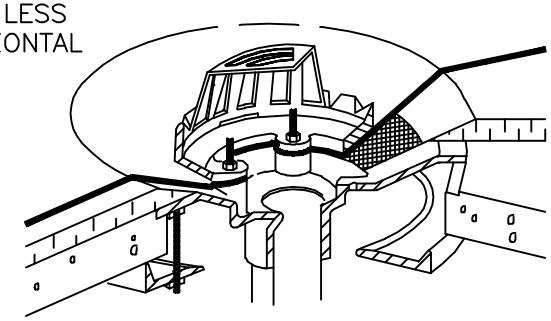

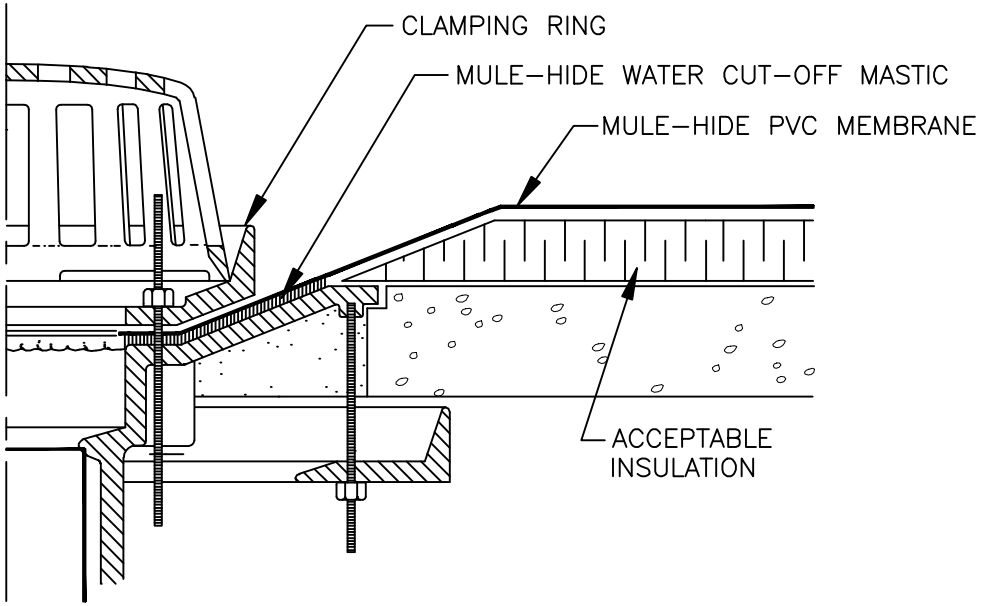

MULE-HIDE PRODUCTS CO., INC. **04/01/2007**	**ROOF DRAIN FOR DRAIN SUMPS SLOPED LESS THAN 3" PER FOOT** **SYSTEMS:** **ALL PVC**	**DETAIL NO:** **MHP-130**

NOTES:

1. DETAILS TO BE USED IN CONJUNCTION WITH STANDARD GUIDE SPECIFCIATIONS CONTAINING REQUIREMENTS FOR NAILERS, INSULATION, SLIPSHEETS, ETC.

2. PVC EDGE SEALANT IS REQUIRED ON ALL CUT OR NON–ENCAPSULATED EDGES OF REINFORECED MEMBRANE. THIS INCLUDES FACTORY CUT MEMBRANE.

3. EXTEND THE REINFORCED MEMBRANE APPROXIMATELY 5–1/2" OUT OF THE SUMP AREA.

4. REMOVE ALL LEAD AND OTHER FLASHING.

5. ALL BOLTS OR CLAMPS MUST BE IN PLACE TO PROVIDE COMPRESSION ON WATER CUT–OFF MASTIC.

6. CUT THE MEMBRANE SO IT EXTENDS A MINIMUM OF 1/2" FROM THE ATTACHMENT POINTS OF THE DRAIN CLAMPING RING.

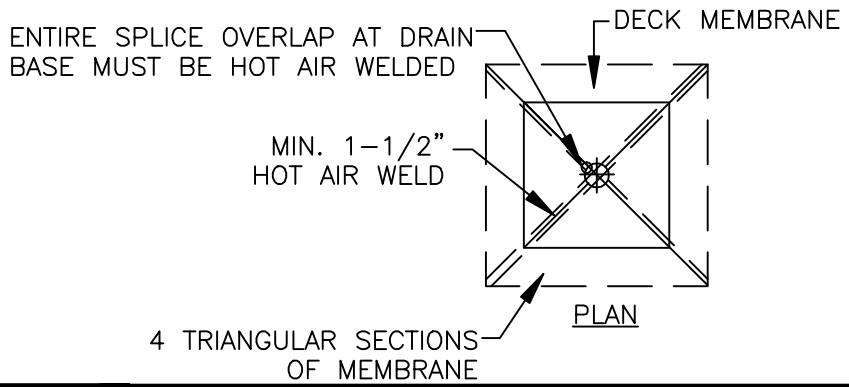

FOR DRAINS WITH TAPERED INSULATION AT DRAIN SUMP GREATER THAN 3" TO 1 HORIZONTAL FOOT

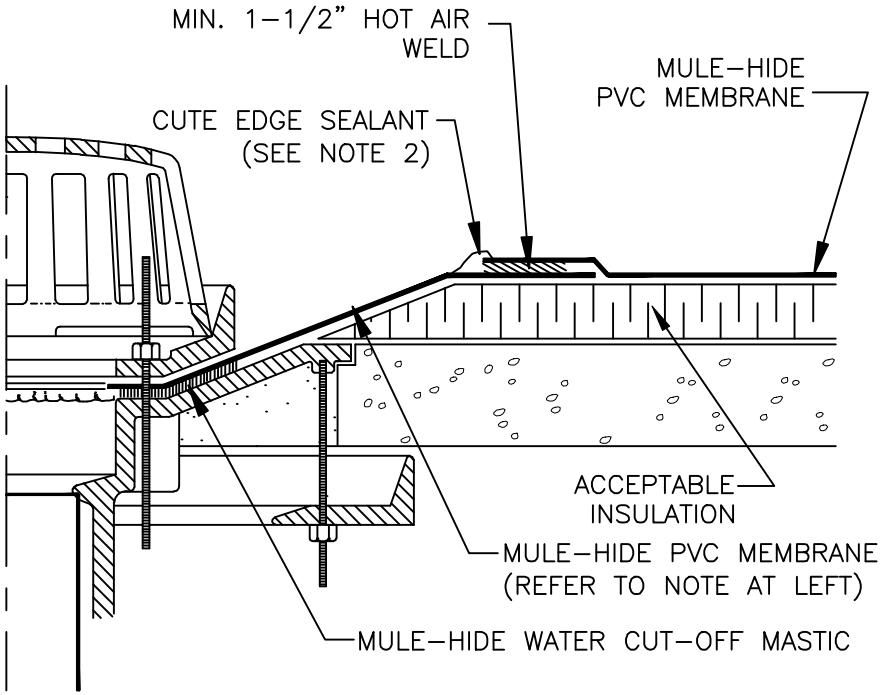

MULE-HIDE PRODUCTS CO., INC. **04/01/2007**	**ROOF DRAIN FOR DRAIN SUMPS SLOPED MORE THAN 3" PER FOOT** **SYSTEMS:** **FULLY ADHERED PVC**	**DETAIL NO:** **MHP-131**

NOTES:

1. DETAILS TO BE USED IN CONJUNCTION WITH STANDARD GUIDE SPECIFCIATIONS CONTAINING REQUIREMENTS FOR NAILERS, INSULATION, SLIPSHEETS, ETC.

2. PVC EDGE SEALANT IS REQUIRED ON ALL CUT OR NON–ENCAPSULATED EDGES OF REINFORECED MEMBRANE. THIS INCLUDES FACTORY CUT MEMBRANE.

3. REMOVE ALL LEAD AND OTHER FLASHING.

4. ALL DRAIN BOLTS OR CLAMPS MUST BE IN PLACE TO PROVIDE COMPRESSION ON WATER CUT–OFF MASTIC.

5. CUT MEMBRANE SO IT EXTENDS A MINIMUM OF 1/2" FROM ATTACHMENT POINTS OF THE CLAMPING RING.

FOR DRAINS WITH TAPERED INSULATION AT DRAIN SUMP GREATER THAN 3" TO 1 HORIZONTAL FOOT

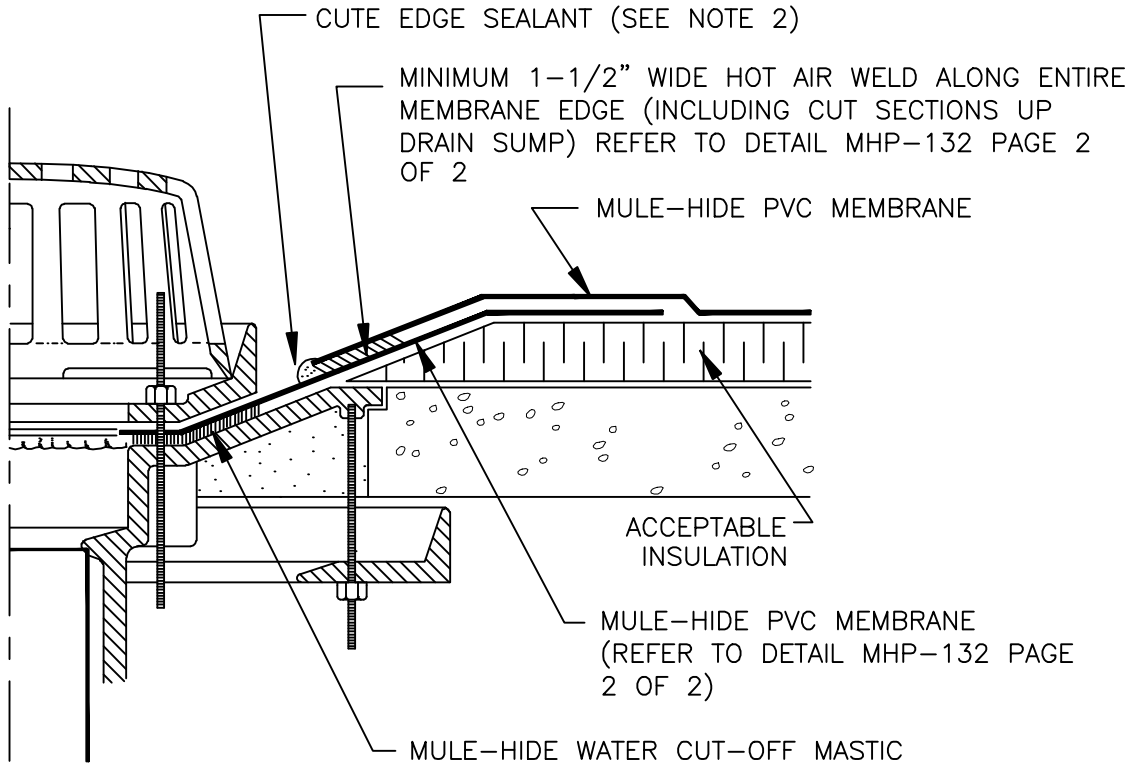

MULE-HIDE PRODUCTS CO., INC. **04/01/2007**	**ROOF DRAIN FOR DRAIN SUMPS SLOPED MORE THAN 3" PER FOOT** **SYSTEMS:** **ALL PVC**	**DETAIL NO:** **MHP-132** (PAGE 1 OF 2)

1. DETAILS TO BE USED IN CONJUNCTION WITH STANDARD GUIDE SPECIFCIATIONS CONTAINING REQUIREMENTS FOR NAILERS, INSULATION, SLIPSHEETS, ETC.

2. PVC EDGE SEALANT IS REQUIRED ON ALL CUT OR NON–ENCAPSULATED EDGES OF REINFORECED MEMBRANE. THIS INCLUDES FACTORY CUT MEMBRANE.

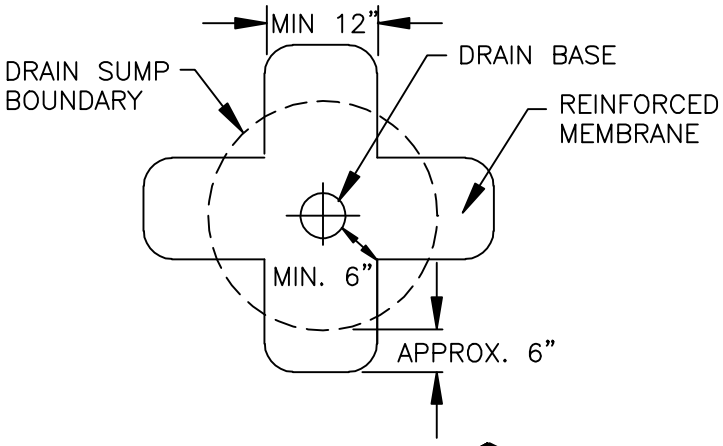

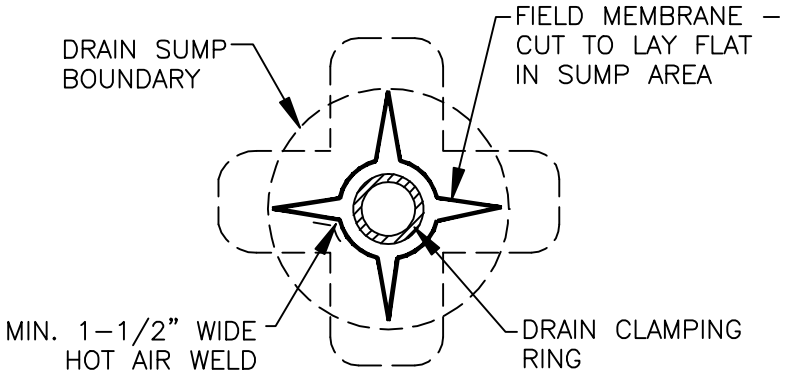

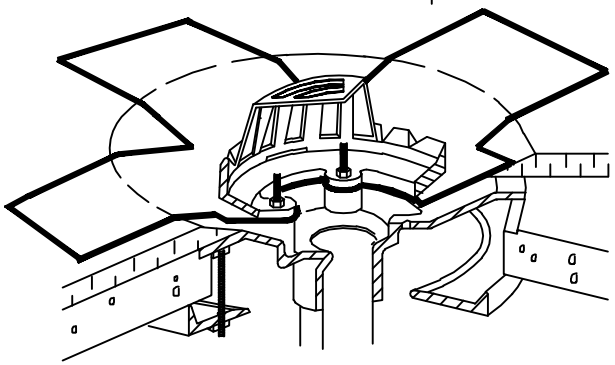

CUT SECTION OF REINFORCED MEMBRANE AS SHOWN AND POSITION INTO DRAIN SUMP. EXTEND MEMBRANE OUT OF DRAIN SUMP APPROXIMATELY 6" AND ROUND CORNERS.

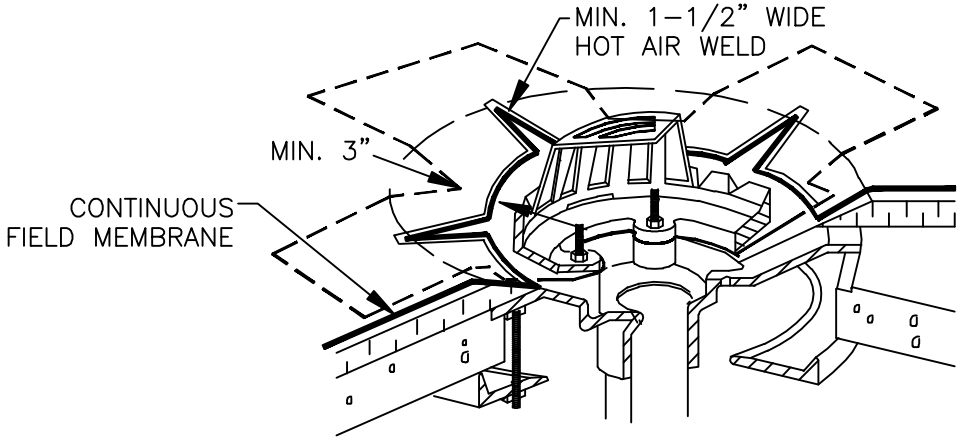

EXTEND FIELD MEMBRANE ONTO MEMBRANE SECTION POSITIONED AT DRAIN SUMP AND CUT AS SHOWN TO LAY FLAT IN SUMP. HOT AIR WELD A MINIMUM OF 1–1/2" COMPLETELY SURROUNDING AREA.

MULE-HIDE PRODUCTS CO., INC. **04/01/2007**	**ROOF DRAIN FOR DRAIN SUMPS SLOPED MORE THAN 3" PER FOOT**	**DETAIL NO:**
	SYSTEMS:	**MHP-132**
	ALL PVC	PAGE 2 OF 2

NOTES:

1. DETAILS TO BE USED IN CONJUNCTION WITH STANDARD GUIDE SPECIFICATIONS CONTAINING REQUIREMENTS FOR NAILERS, INSULATION, SLIPSHEETS, ETC.

2. PVC EDGE SEALANT IS REQUIRED ON ALL CUT OR NON–ENCAPSULATED EDGES OF REINFORECED MEMBRANE. THIS INCLUDES FACTORY CUT MEMBRANE.

3. WOOD NAILER MUST EXTEND PAST TOTAL WIDTH OF DECK FLANGE.

4. INSTALL WALL FLASHING PRIOR TO SCUPPER INSTALLATION.

5. DISCONTINUE FASTENING PLATES AT SCUPPER OPENING AS SHOWN.

6. MINIMUM 1–1/2" HOT AIR WELD FROM NAIL HEAD.

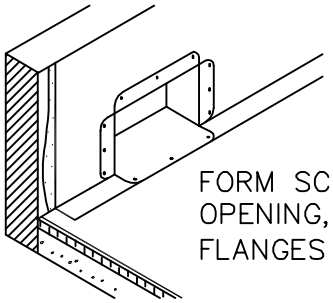

NOTE: FORM SCUPPER BOX OF PVC COATED METAL, TAPE THE METAL SEAM, AND OVERLAY WITH FLASHING BEFORE INSERTING INTO SCUPPER OPENING. POSITION THE SCUPPER BOX SO THE METAL SEAM IS LOCATED ON THE TOP OR SIDES OF THE SCUPPER.

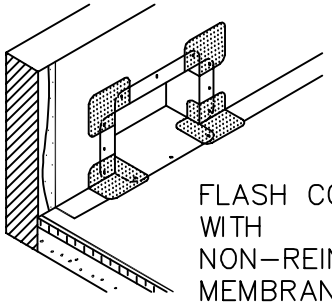

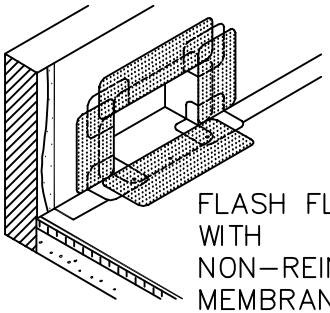

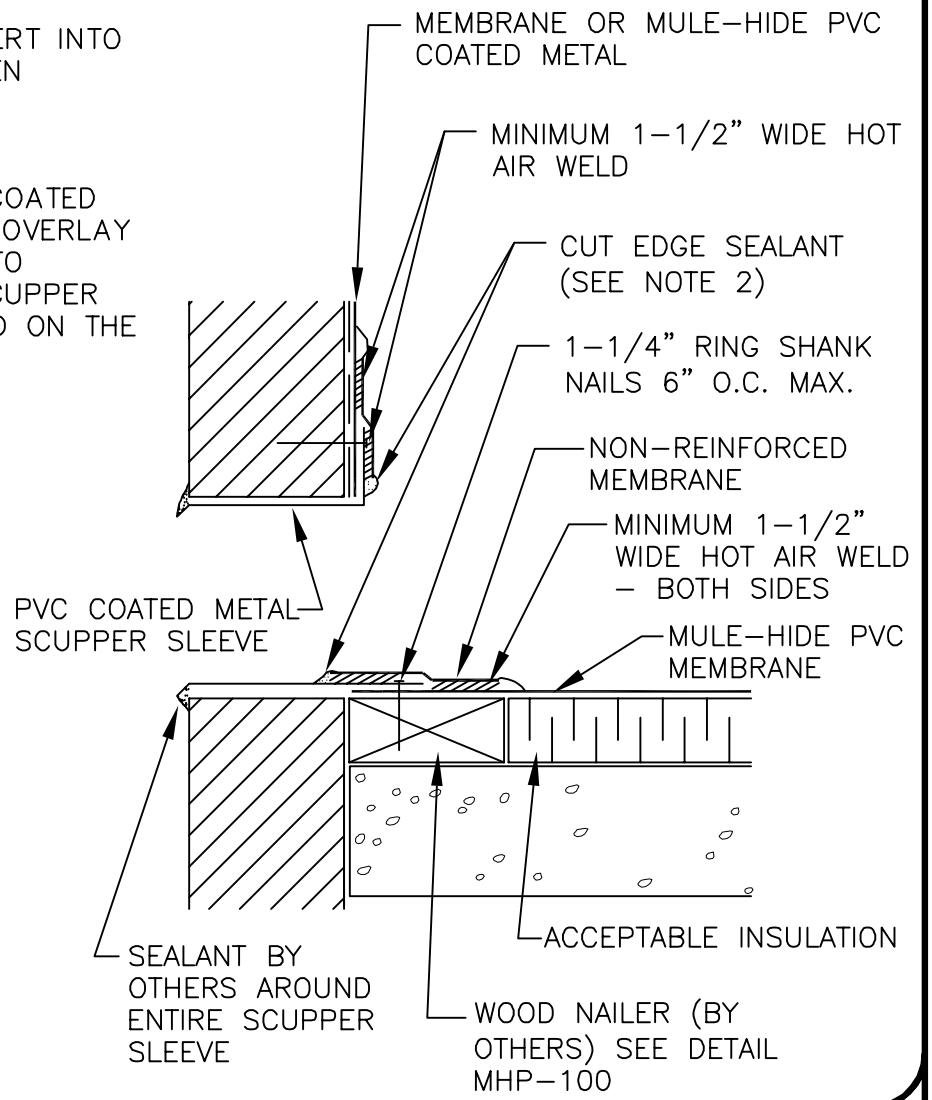

MULE-HIDE PRODUCTS CO., INC. **04/01/2007**	**SCUPPER WITH COATED METAL SYSTEMS:** **ALL PVC**	**DETAIL NO:** **MHP-133**

NOTES:

1. DETAILS TO BE USED IN CONJUNCTION WITH STANDARD GUIDE SPECIFICATIONS CONTAINING REQUIREMENTS FOR NAILERS, INSULATIONI, SLIPSHEETS, ETC.

2. PVC EDGE SEALANT IS REQUIRED ON ALL CUT OR NON–ENCAPSULATED EDGES OF REINFORCED MEMBRANE. THIS INCLUDES FACTORY CUT MEMBRANE.

3. FIELD MEMBRANE SEAMS MUST NOT RUN THROUGH DRAIN BOWL.

4. ALL MEMBRANE CUTS MUST BE ROUNDED TO PREVENT TEARING.

5. FOR REROOF APPLICATION, OLD LEADS MUST BE REMOVED AND FLANGE CLEANDED OF ASPHALT.

6. REFER TO MULE–HIDE UPLIFT RATINGS FOR APPROPRIATE FASTENER SIZE, AND SPACING.

FOR DRAINS WITH TAPERED INSULATION AT DRAIN SUMP LESS THAN 3" TO 1 HORIZONTAL FOOT

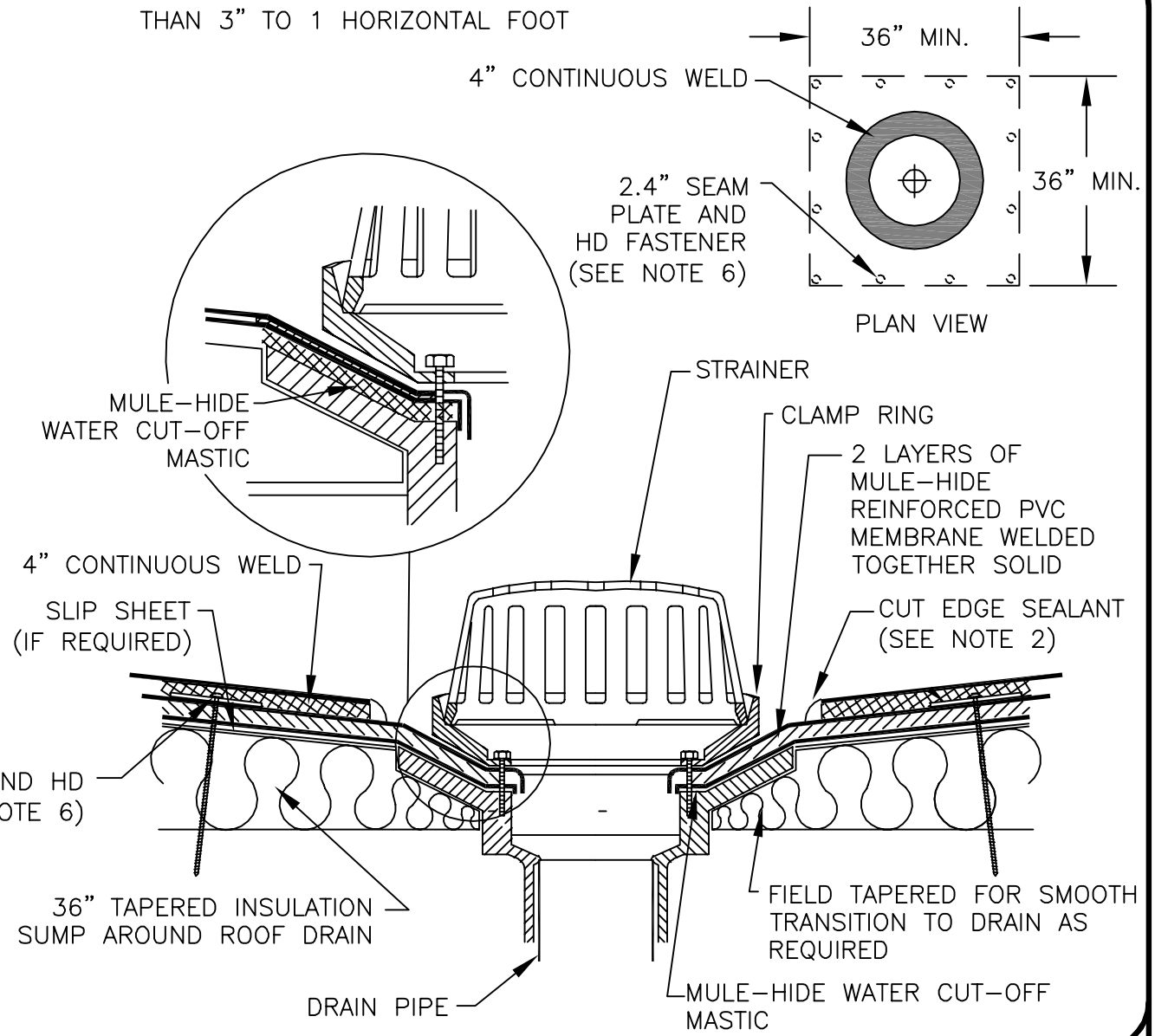

MULE-HIDE PRODUCTS CO., INC. 2010	***MECHANICALLY FASTENED TARGET ROOF DRAIN***	***DETAIL NO:***
	SYSTEMS:	***MHP-134***
	MECHANICALLY FASTENED PVC	

NOTES:

1. DETAILS TO BE USED IN CONJUNCTION WITH STANDARD GUIDE SPECIFCIATIONS CONTAINING REQUIREMENTS FOR NAILERS, INSULATION, SLIPSHEETS, ETC.

2. PVC EDGE SEALANT IS REQUIRED ON ALL CUT OR NON–ENCAPSULATED EDGES OF REINFORECED MEMBRANE. THIS INCLUDES FACTORY CUT MEMBRANE.

3. EXTEND THE REINFORCED MEMBRANE APPROXIMATELY 5–1/2" OUT OF THE SUMP AREA.

4. REMOVE ALL LEAD AND OTHER FLASHING.

5. ALL BOLTS OR CLAMPS MUST BE IN PLACE TO PROVIDE COMPRESSION ON WATER CUT–OFF MASTIC.

6. CUT THE MEMBRANE SO IT EXTENDS A MINIMUM OF 1/2" FROM THE ATTACHMENT POINTS OF THE DRAIN CLAMPING RING.

7. REFER TO MULE–HIDE UPLIFT RATINGS FOR APPROPRIATE FASTENER SIZE, AND SPACING.

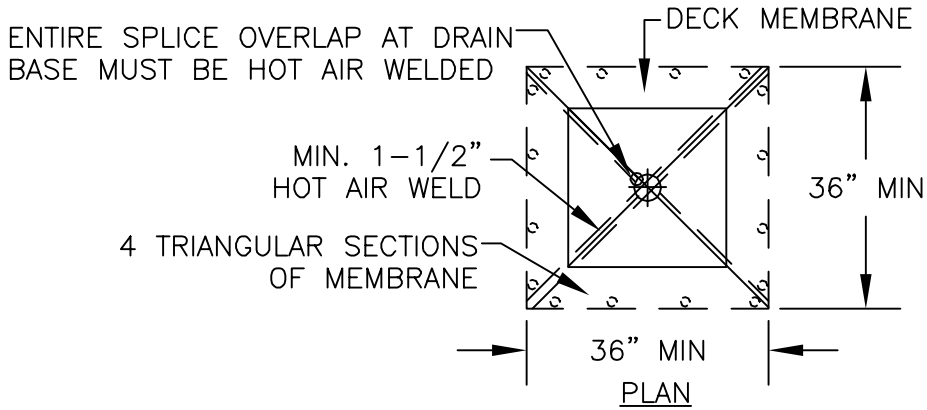

FOR DRAINS WITH TAPERED INSULATION AT DRAIN SUMP GREATER THAN 3" TO 1 HORIZONTAL FOOT

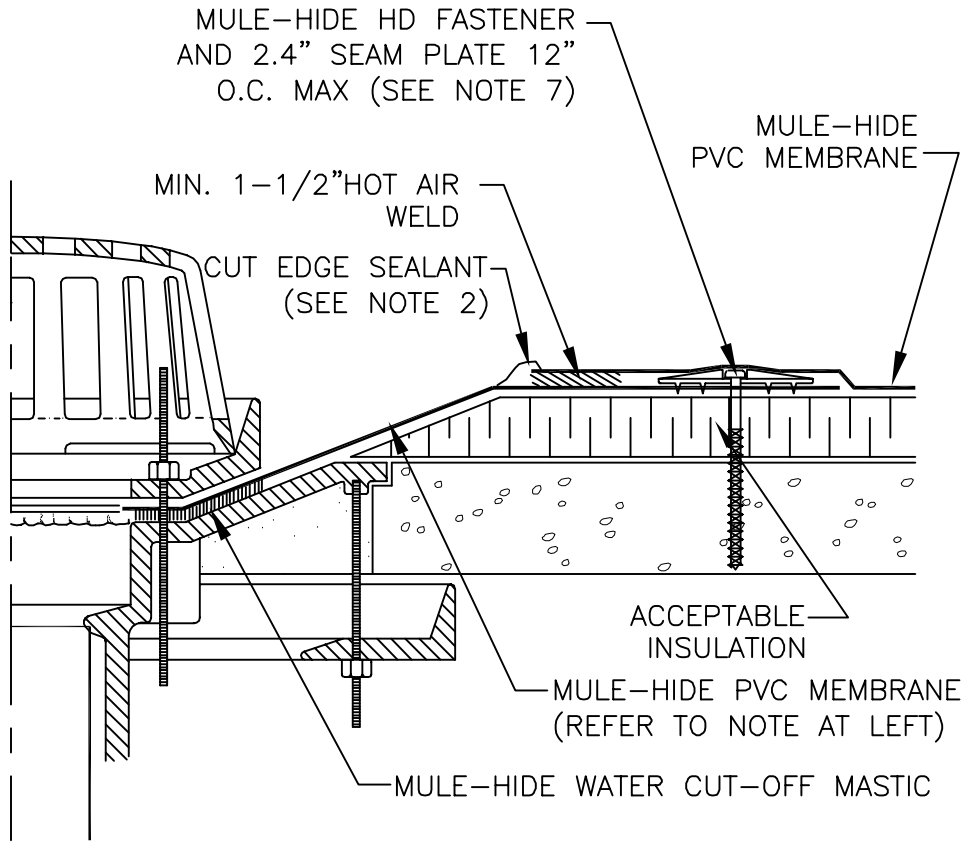

MULE-HIDE PRODUCTS CO., INC. 2010	***ROOF DRAIN FOR DRAIN SUMPS SLOPED MORE THAN 3" PER FOOT***	***DETAIL NO:***
	SYSTEMS:	***MHP-135***
	MECHANICALLY FASTENED PVC	

NOTES:

1. DETAILS TO BE USED IN CONJUNCTION WITH STANDARD GUIDE SPECIFICATIONS CONTAINING REQUIREMENTS FOR NAILERS, INSULATION, SLIPSHEETS, ETC.

2. PVC EDGE SEALANT IS REQUIRED ON ALL CUT OR NON-ENCAPSULATED EDGES OF REINFORECED MEMBRANE. THIS INCLUDES FACTORY CUT MEMBRANE.

3. WOOD NAILER MUST EXTEND PAST TOTAL WIDTH OF DECK FLANGE.

4. INSTALL WALL FLASHING PRIOR TO SCUPPER INSTALLATION.

5. DISCONTINUE FASTENING PLATES AT SCUPPER OPENING AS SHOWN.

6. MINIMUM 1-1/2" HOT AIR WELD FROM NAIL HEAD.

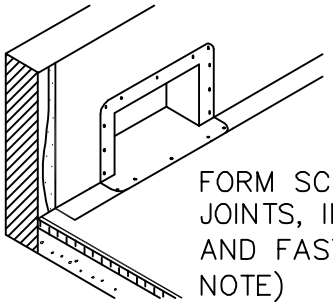

NOTE: FORM SCUPPER BOX OF PVC COATED METAL, TAPE THE METAL SEAM, AND OVERLAY WITH FLASHING BEFORE INSERTING INTO SCUPPER OPENING. POSITION THE SCUPPER BOX SO THE METAL SEAM IS LOCATED ON THE TOP OR SIDES OF THE SCUPPER.

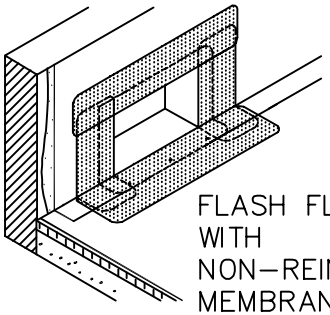

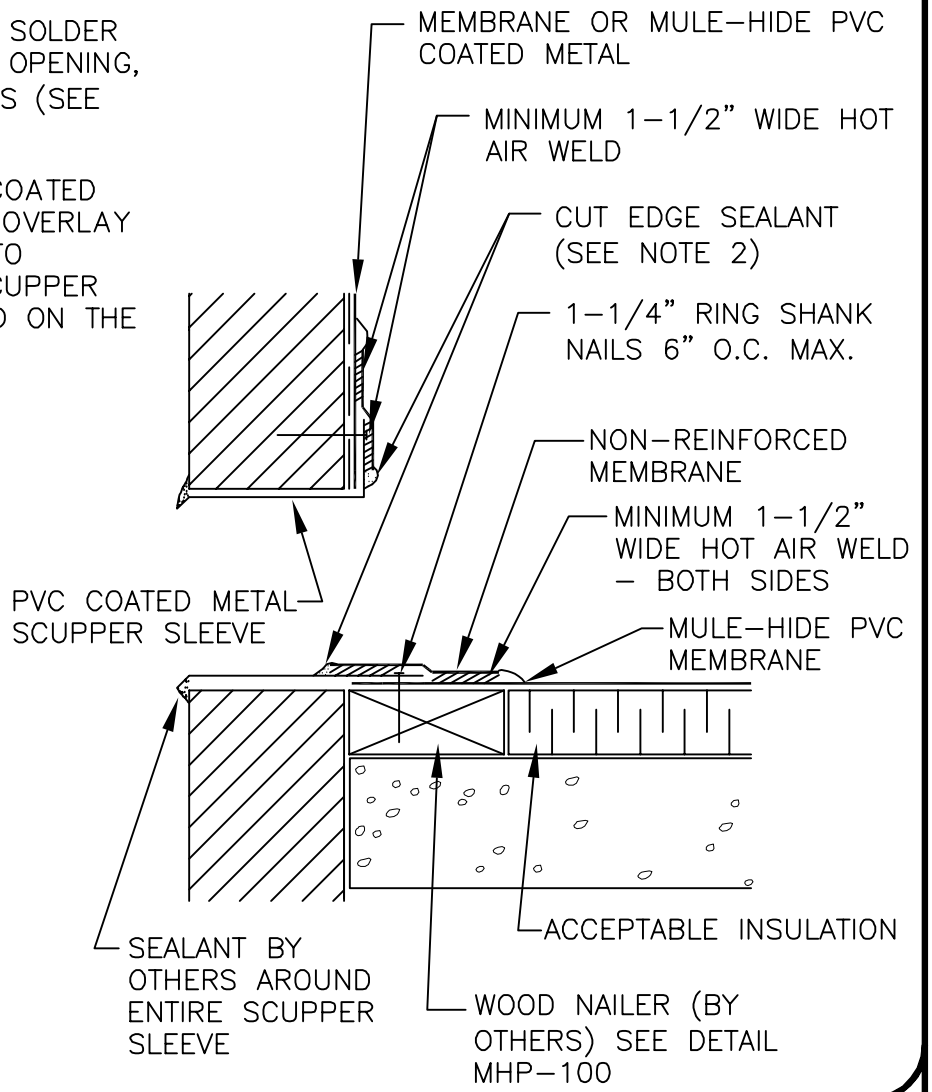

MULE-HIDE PRODUCTS CO., INC. **04/01/2007**	**(SOLDERED JOINTS) SCUPPER WITH COATED METAL** **SYSTEMS:** **ALL PVC**	**DETAIL NO:** **MHP-136**

NOTES:

1. DETAILS TO BE USED IN CONJUNCTION WITH STANDARD GUIDE SPECIFCIATIONS CONTAINING REQUIREMENTS FOR NAILERS, INSULATION, SLIPSHEETS, ETC.

2. PVC EDGE SEALANT IS REQUIRED ON ALL CUT OR NON–ENCAPSULATED EDGES OF REINFORECED MEMBRANE. THIS INCLUDES FACTORY CUT MEMBRANE.

3. REMOVE ALL LEAD AND OTHER FLASHING.

4. TEMPERATURE OF PIPE MUST NOT EXCEED 180° F.

5. PIPE SEAL MUST HAVE INTACT RIB AT TOP EDGE, REGARDLESS OF PIPE DIAMETER.

6. INSTALL 3 FASTENERS AND SEAM PLATES AROUND PIPE EQUALLY SPACED. FASTENERS MAY ALSO BE POSITIONED MAXIMUM 12" FROM PIPE, FASTENED 12" ON CENTER AND FLASHED WITH MULE–HIDE PVC REINFORCED MEMBRANE.

   FASTENERS/PLATES ARE NOT REQUIRED ON ADHERED SYSTEMS UNLESS PIPE DIAMETER EXCEEDS 18".

7. IF PLATES CANNOT BE INSTALLED AS SHOWN THEY CAN BE POSITIONED OUTSIDE THE PIPE FLASHING FLANGE AND FLASHED WITH 6" WIDE REINFORCED MEMBRANE.

8. REFER TO MULE–HIDE UPLIFT RATINGS FOR APPROPRIATE FASTENER SIZE, AND SPACING.

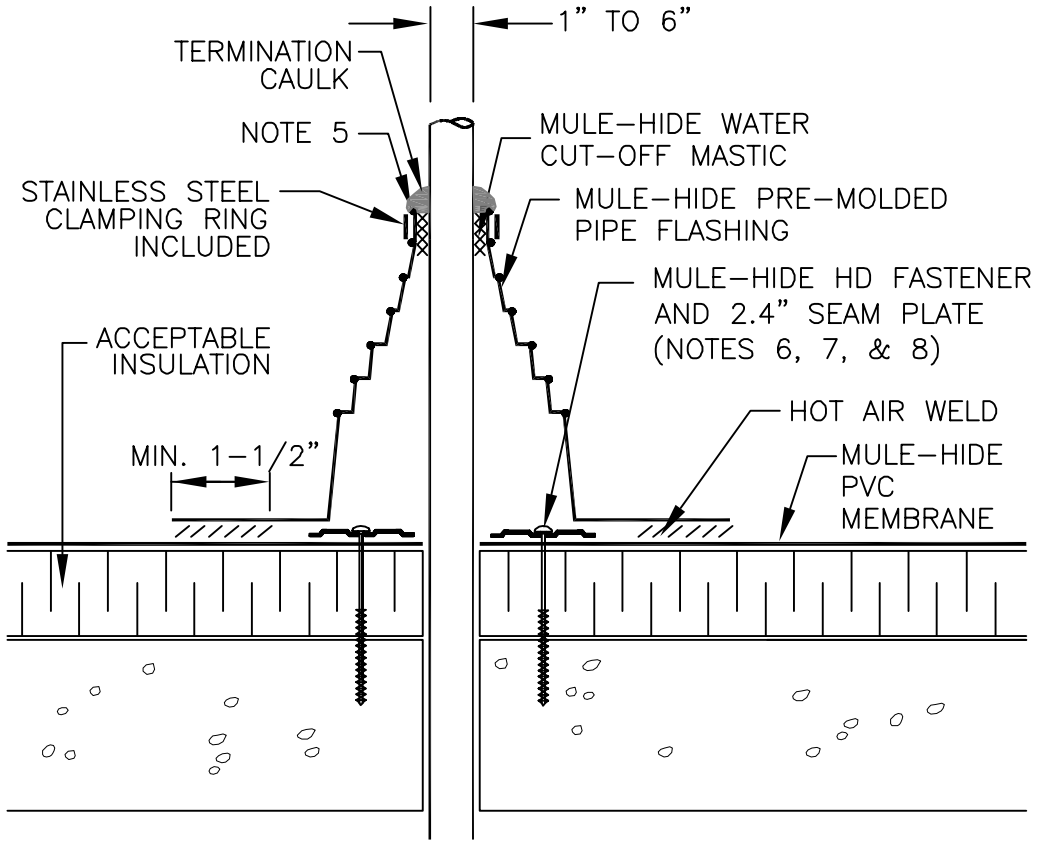

MULE-HIDE PRODUCTS CO., INC. 04/01/2007	***PVC PRE-MOLDED PIPE FLASHING SYSTEMS:*** ***MECHANICALLY ATTACHED PVC***	***DETAIL NO:*** ***MHP-140***

NOTES:

1. DETAILS TO BE USED IN CONJUNCTION WITH STANDARD GUIDE SPECIFCIATIONS CONTAINING REQUIREMENTS FOR NAILERS, INSULATION, SLIPSHEETS, ETC.

2. PVC EDGE SEALANT IS REQUIRED ON ALL CUT OR NON-ENCAPSULATED EDGES OF REINFORECED MEMBRANE. THIS INCLUDES FACTORY CUT MEMBRANE.

3. REMOVE ALL LEAD AND OTHER FLASHING BEFORE INSTALLING FIELD FABRICATED PIPE SEAL.

4. TEMPERATURE OF PIPE MUST NOT EXCEED 180° F.

5. NON-REINFORCED MEMBRANE WRAPPED AROUND PIPE SHALL HAVE MINIMUM 1-1/2" VERTICAL HOT AIR WELD.

6. INSTALL A MINIMUM OF 4 2.4" SEAM PLATES AROUND PIPES WITH A DIAMETER UP TO 6". ADDITIONAL SEAM PLATES WILL BE REQUIRED FOR PIPES GREATER THAN 6" IN DIAMETER AND SHALL BE SPACED 12" ON CENTER MAXIMUM.

   FASTENERS/PLATES ARE NOT REQUIRED ON ADHERED SYSTEMS UNLESS PIPE DIAMETER EXCEEDS 18".

7. REFER TO MULE-HIDE UPLIFT RATINGS FOR APPROPRIATE FASTENER SIZE, AND SPACING.

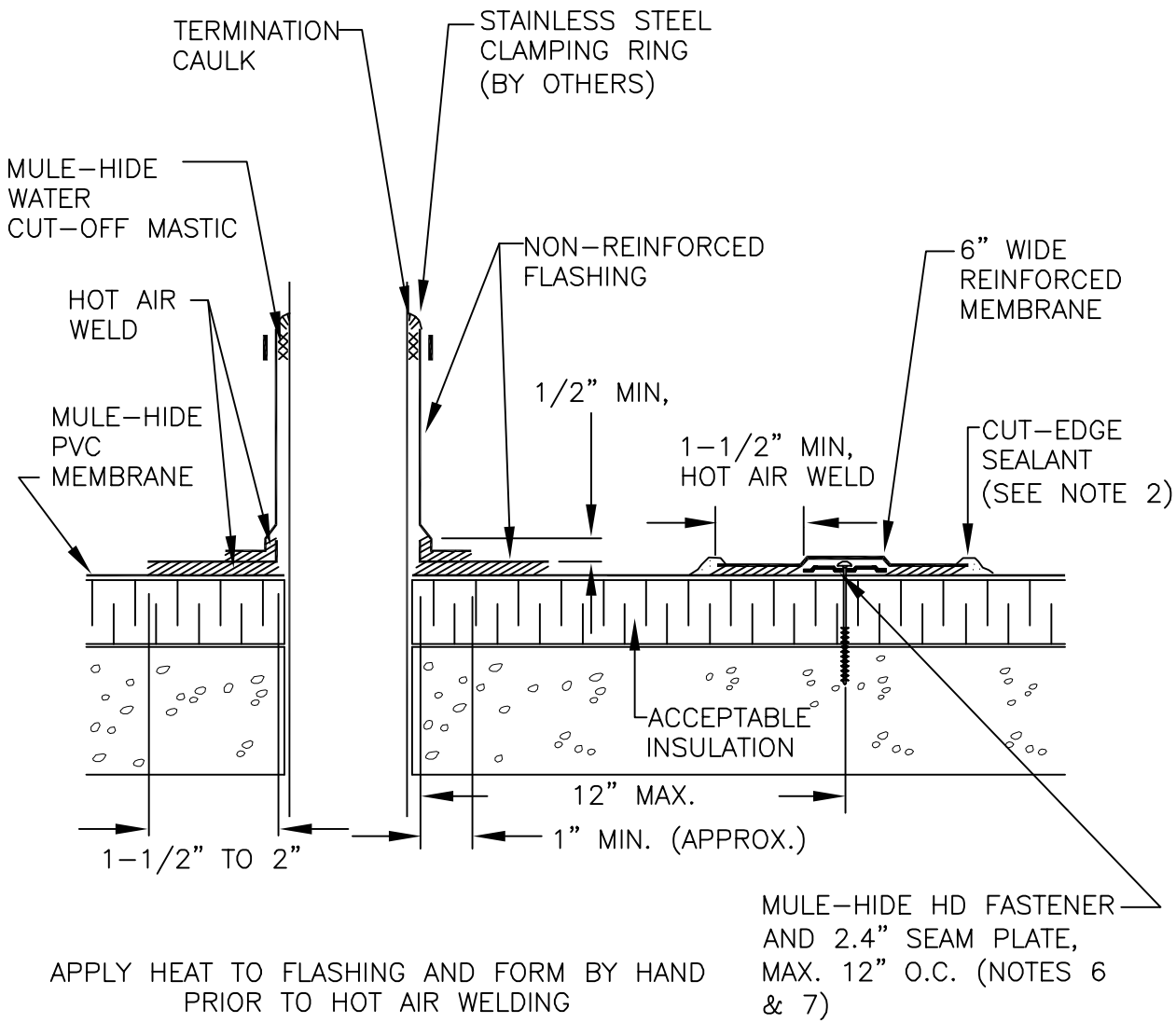

APPLY HEAT TO FLASHING AND FORM BY HAND PRIOR TO HOT AIR WELDING

MULE-HIDE PRODUCTS CO., INC. 04/01/2007	***FIELD FABRICATED PIPE FLASHING SYSTEMS: FULLY ADHERED AND MECHANICALLY ATTACHED PVC***	***DETAIL NO: MHP-141***

NOTES:

1. DETAILS TO BE USED IN CONJUNCTION WITH STANDARD GUIDE SPECIFCIATIONS CONTAINING REQUIREMENTS FOR NAILERS, INSULATION, SLIPSHEETS, ETC.

2. PVC EDGE SEALANT IS REQUIRED ON ALL CUT OR NON–ENCAPSULATED EDGES OF REINFORECED MEMBRANE. THIS INCLUDES FACTORY CUT MEMBRANE.

3. FIELD–FABRICATED PIPE SEAL FOR USE WITH HOT PIPE, 120° F OR HOTTER.

4. NON–REINFORCED MEMBRANE WRAPPED AROUND PIPE SHALL HAVE MINIMUM 1–1/2" VERTICAL HOT AIR WELD.

5. TEMPERATURE OF METAL COLLAR MUST NOT EXCEED 120° F.

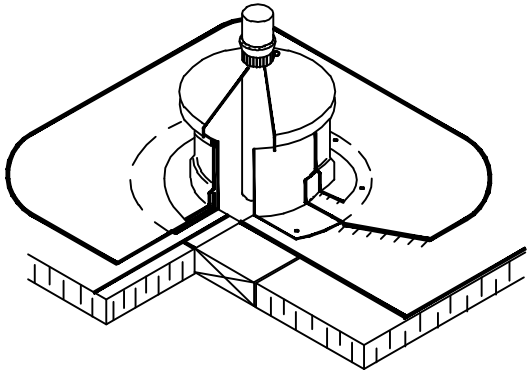

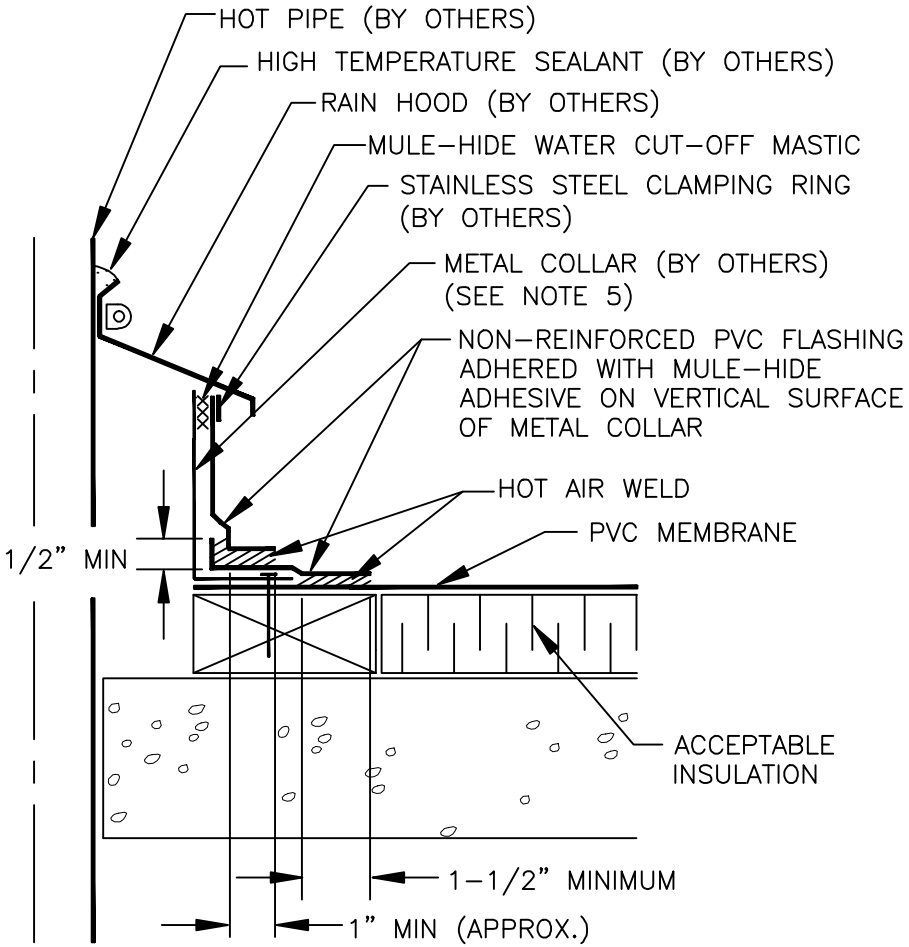

APPLY HEAT TO FLASHING AND FORM BY HAND PRIOR TO HOT AIR WELDING

MULE-HIDE PRODUCTS CO., INC. **04/01/2007**	**FIELD FABRICATED HOT PIPE SYSTEMS:** **ALL PVC**	**DETAIL NO:** **MHP-142**

NOTES:

1. DETAILS TO BE USED IN CONJUNCTION WITH STANDARD GUIDE SPECIFCIATIONS CONTAINING REQUIREMENTS FOR NAILERS, INSULATION, SLIPSHEETS, ETC.

2. PVC EDGE SEALANT IS REQUIRED ON ALL CUT OR NON–ENCAPSULATED EDGES OF REINFORECED MEMBRANE. THIS INCLUDES FACTORY CUT MEMBRANE.

3. TEMPERATURE OF PIPE MUST NOT EXCEED 180° F.

4. FILL POCKET COMPLETELY WITH THERMOPLASTIC ONE PART POURABLE SEALER UNTIL RIM IS COVERED WITH SEALANT; ENSURE ALL VOIDS ARE FILLED.

5. SEALANT POCKET TO BE MINIMUM 1" FROM PENETRATION ON ANY SIDE.

6. ON MECHANICALLY–FASTENED SYSTEMS, INSTALL A MINIMUM OF 4 2.4" SEAM PLATES AROUND SEALANT POCKETS. FASTENERS/PLATES ARE NOT REQUIRED ON ADHERED SYSTEMS.

7. REFER TO MULE–HIDE UPLIFT RATINGS FOR APPROPRIATE FASTENER SIZE, AND SPACING.

REFER TO TECHNICAL DATA BULLETIN (TDB) FOR STEP–BY–STEP INSTALLATION PROCEDURES

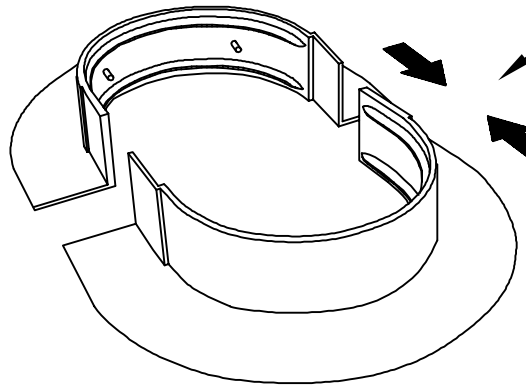

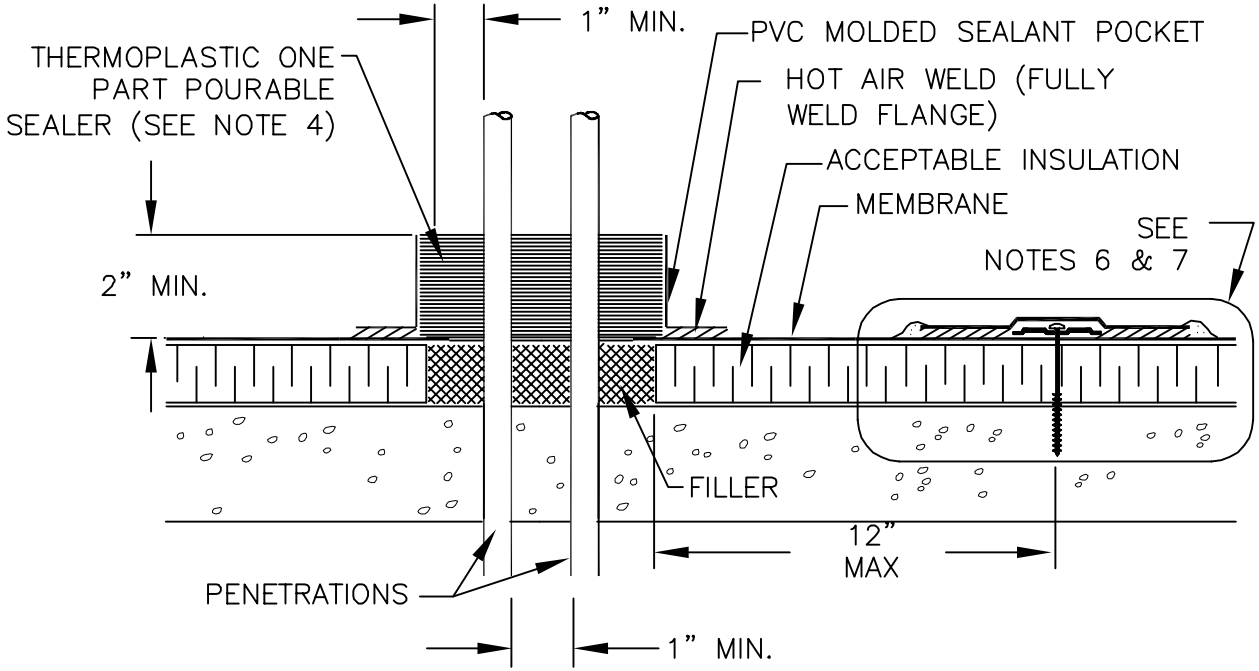

MULE-HIDE PRODUCTS CO., INC. 2010	***MOLDED SEALANT POCKET SYSTEMS:*** ***ALL PVC***	***DETAIL NO:*** ***MHP-143***

NOTES:

1. DETAILS TO BE USED IN CONJUNCTION WITH STANDARD GUIDE SPECIFCIATIONS CONTAINING REQUIREMENTS FOR NAILERS, INSULATION, SLIPSHEETS, ETC.

2. PVC EDGE SEALANT IS REQUIRED ON ALL CUT OR NON-ENCAPSULATED EDGES OF REINFORECED MEMBRANE. THIS INCLUDES FACTORY CUT MEMBRANE.

3. POSITION SEAM PLATES 1/2" MINIMUM TO 1" MAXIMUM FROM EDGE OF FIELD MEMBRANE.

4. REFER TO MULE-HIDE UPLIFT RATINGS FOR APPROPRIATE FASTENER SIZE, AND SPACING.

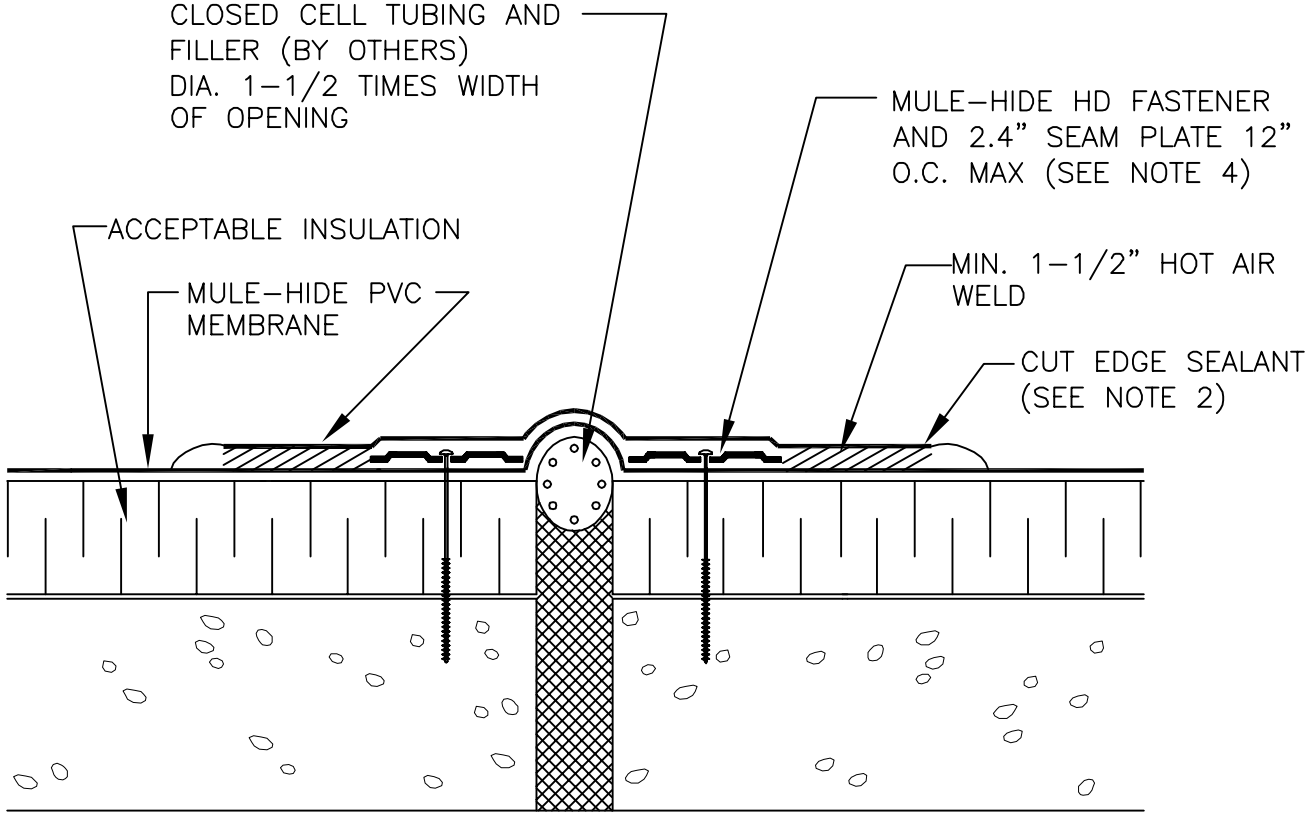

MULE-HIDE PRODUCTS CO., INC. 2010	***EXPANSION JOINT DECK TO DECK***	***DETAIL NO:***
	SYSTEMS:	***MHP-150***
	ALL PVC	

NOTES:

1. DETAILS TO BE USED IN CONJUNCTION WITH STANDARD GUIDE SPECIFCIATIONS CONTAINING REQUIREMENTS FOR NAILERS, INSULATION, SLIPSHEETS, ETC.

2. PVC EDGE SEALANT IS REQUIRED ON ALL CUT OR NON–ENCAPSULATED EDGES OF REINFORECED MEMBRANE. THIS INCLUDES FACTORY CUT MEMBRANE.

3. POSITION SEAM PLATES 1/2" MINIMUM TO 1" MAXIMUM FROM EDGE OF DECK FLANGE.

4. REFER TO MULE–HIDE UPLIFT RATINGS FOR APPROPRIATE FASTNER SIZE, AND SPACING.

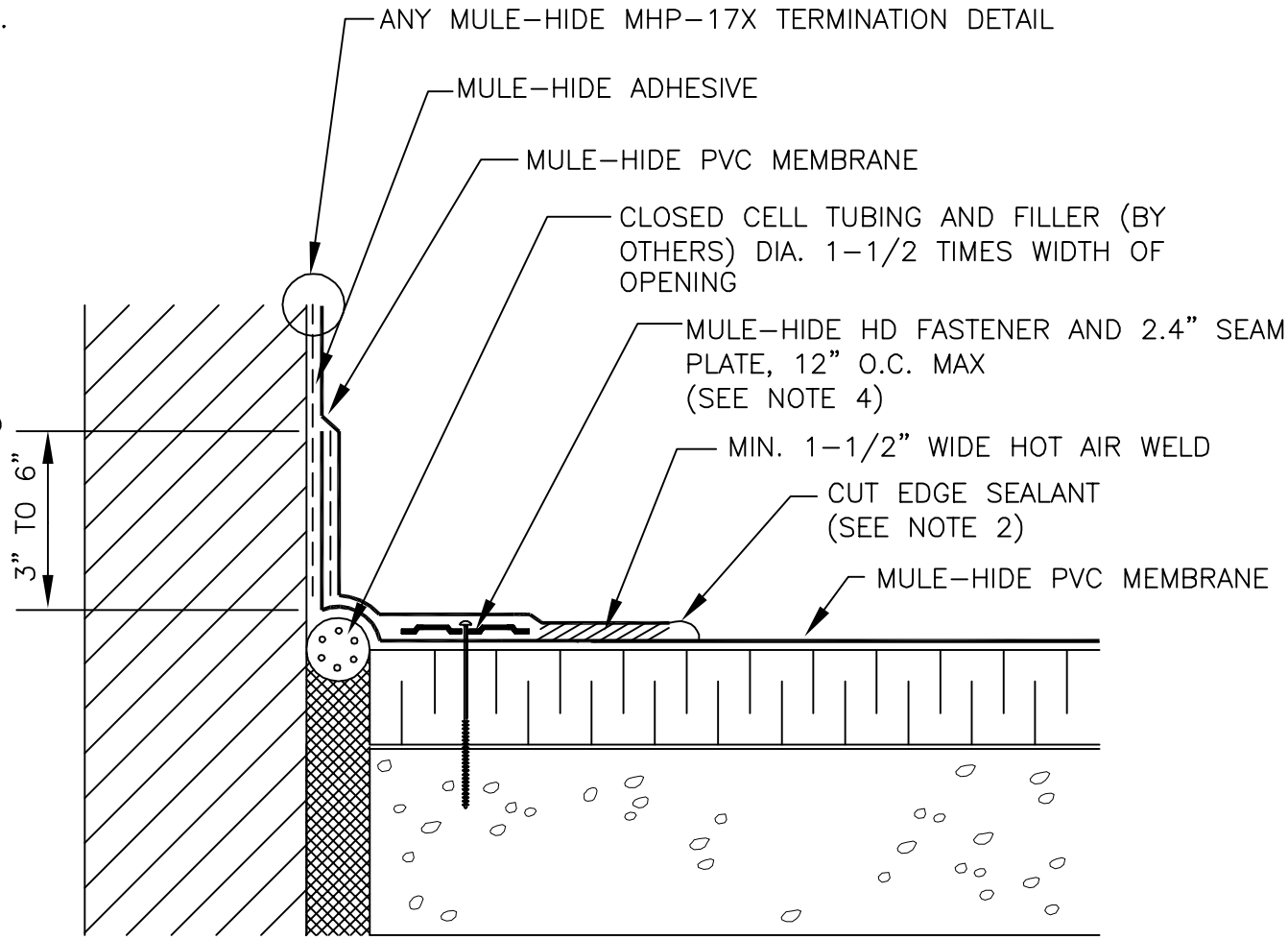

MULE-HIDE PRODUCTS CO., INC. 2010	***EXPANSION JOINT AT JUNCTION OF DECK AND WALL***	***DETAIL NO:***
	SYSTEMS:	***MHP-151***
	ALL PVC	

NOTES:

1. DETAILS TO BE USED IN CONJUNCTION WITH STANDARD GUIDE SPECIFCIATIONS CONTAINING REQUIREMENTS FOR NAILERS, INSULATION, SLIPSHEETS, ETC.

2. PVC EDGE SEALANT IS REQUIRED ON ALL CUT OR NON-ENCAPSULATED EDGES OF REINFORECED MEMBRANE. THIS INCLUDES FACTORY CUT MEMBRANE.

3. POSITION 2.4" SEAM PLATES 1/2" TO 1" FROM EDGE OF FIELD MEMBRANE.

4. SEAM PLATES CAN BE INSTALLED VERTICALLY.

5. IF A WOOD NAILER IS NOT PRESENT, THE FASTENER MUST ENGAGE THE STRUCTURAL ROOF DECK.

6. REFER TO MULE-HIDE UPLIFT RATINGS FOR APPROPRIATE FASTENER SIZE, AND SPACING.

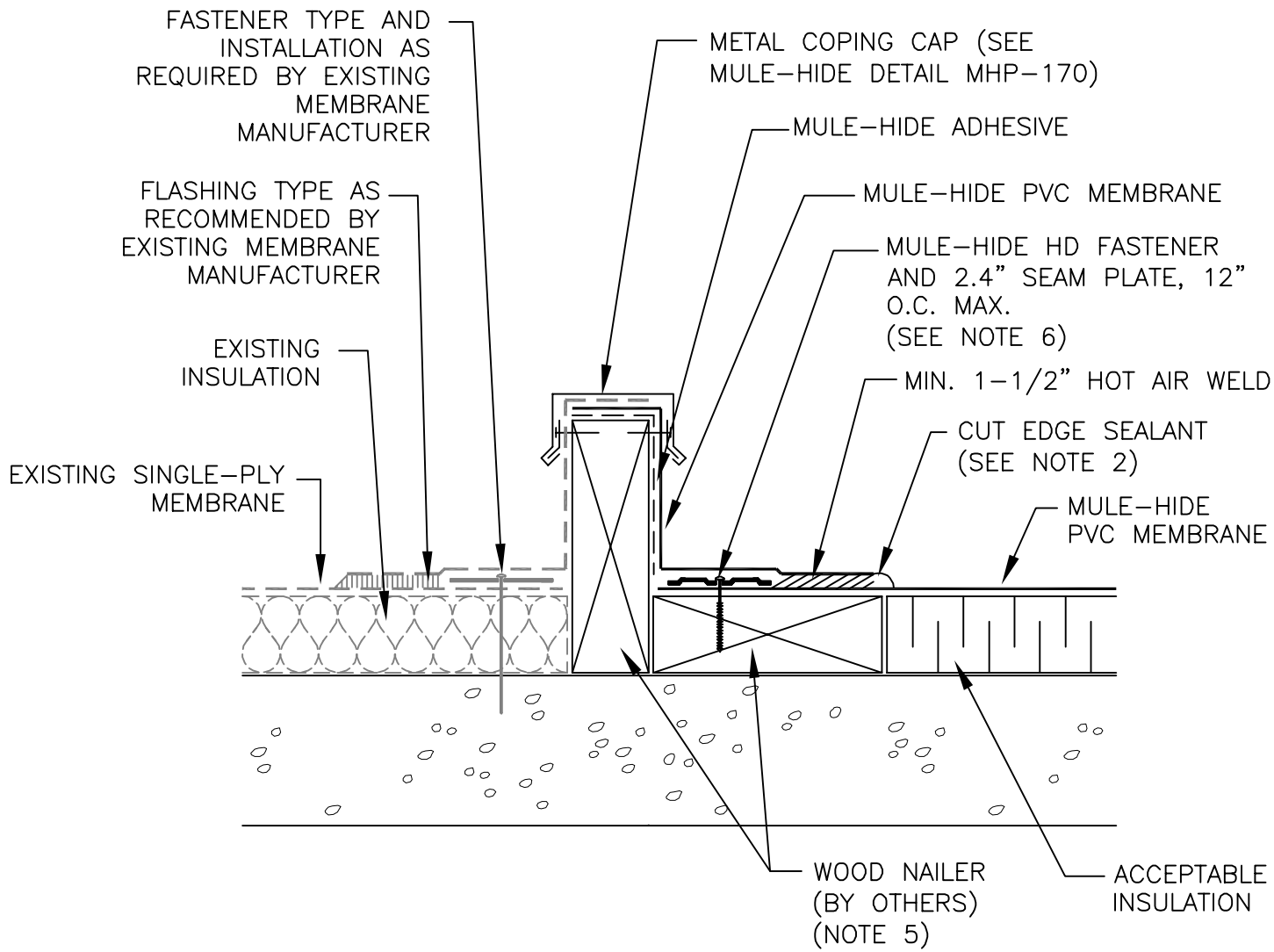

MULE-HIDE PRODUCTS CO., INC. 2010	***TIE-IN TO EXISTING SINGLE-PLY SYSTEMS:*** ***ALL PVC***	***DETAIL NO:*** ***MHP-160***

NOTES:

1. DETAILS TO BE USED IN CONJUNCTION WITH STANDARD GUIDE SPECIFICATIONS CONTAINING REQUIREMENTS FOR NAILERS, INSULATION, SLIPSHEETS, ETC.

2. PVC EDGE SEALANT IS REQUIRED ON ALL CUT EDES OR NON-ENCAPSULATED EDGES OF REINFORCED MEMBRANE. THIS INCLUDES FACTORY CUT MEMBRANE.

3. ACCORDING TO PROJECT CONDITIONS, THE SPECIFIER AND/OR APPLICATOR MUST DETERMINE THE REQUIRED VERTICAL FLASHING HEIGHT BASED ON REGIONAL CLIMATIC CONDITIONS.

4. COATED METAL FLASHINGS MUST EXTEND UNDER A MINIMUM OF TWO (2) COURSES OF SHINGLES.

5. THE ROOFING SHEET MAY BE ATTACHED WITH APPROVED FASTENERS AND PLATES AS A BASE TIE-IN. SEE DETAIL MHP-120.

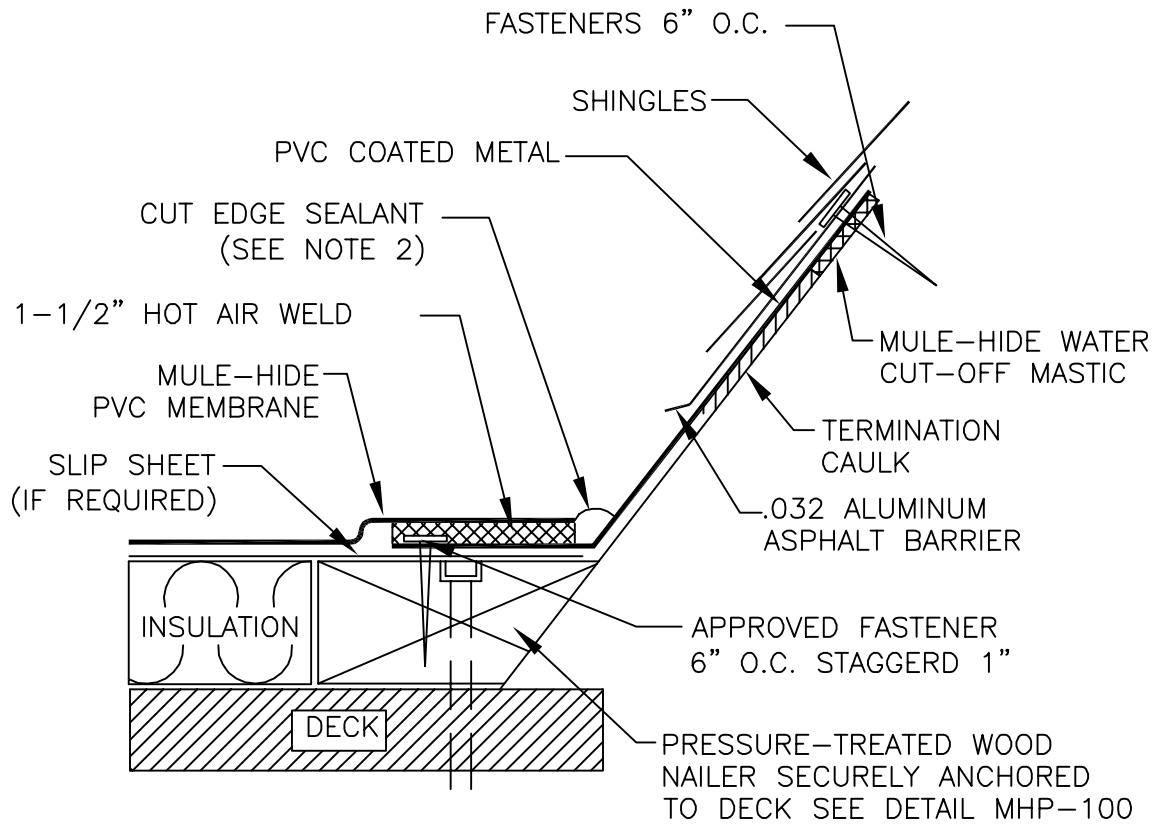

MULE-HIDE PRODUCTS CO., INC. **04/01/2007**	**COATED METAL TRANSITION TO SHINGLE ROOF**	**DETAIL NO:**
	SYSTEMS: **ALL PVC**	**MHP-161**

NOTES:

1. DETAILS TO BE USED IN CONJUNCTION WITH STANDARD GUIDE SPECIFICATIONS CONTAINING REQUIREMENTS FOR NAILERS, INSULATION, SLIPSHEETS, ETC.

2. PVC EDGE SEALANT IS REQUIRED ON ALL CUT EDES OR NON-ENCAPSULATED EDGES OF REINFORCED MEMBRANE. THIS INCLUDES FACTORY CUT MEMBRANE.

3. ACCORDING TO PROJECT CONDITIONS, THE SPECIFIER AND/OR APPLICATOR MUST DETERMINE THE REQUIRED VERTICAL FLASHING HEIGHT BASED ON REGIONAL CLIMATIC CONDITIONS.

4. COATED METAL FLASHINGS MUST EXTEND UNDER A MINIMUM OF TWO (2) COURSES OF SHINGLES.

5. THE ROOFING SHEET MAY BE ATTACHED WITH APPROVED FASTENERS AND PLATES AS A BASE TIE-IN. SEE DETAIL MHP-120.

6. REFER TO MULE-HIDE UPLIFT RATINGS FOR APPROPRIATE FASTENER SIZE, AND SPACING.

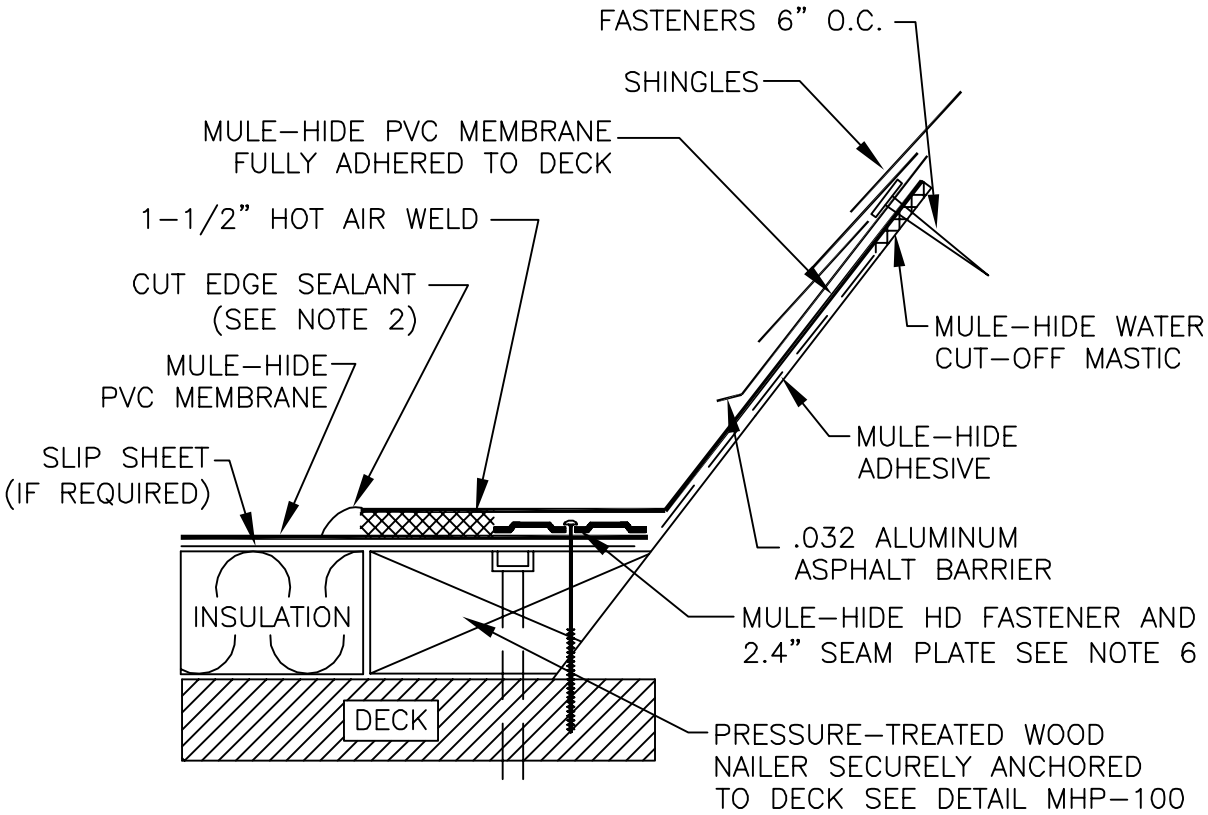

MULE-HIDE PRODUCTS CO., INC. 2010	***MEMBRANE FLASHING TRANSITION TO SHINGLE ROOF***	***DETAIL NO:***
	SYSTEMS:	***MHP-162***
	ALL PVC	

NOTES:

1. DETAILS TO BE USED IN CONJUNCTION WITH STANDARD GUIDE SPECIFCIATIONS CONTAINING REQUIREMENTS FOR NAILERS, INSULATION, SLIPSHEETS, ETC.

2. PVC EDGE SEALANT IS REQUIRED ON ALL CUT OR NON–ENCAPSULATED EDGES OF REINFORECED MEMBRANE. THIS INCLUDES FACTORY CUT MEMBRANE.

3. FACE FASTENING WITH GROMMETTED FASTENERS SPACED 18" O.C. MAX ON INSIDE FACE OF METAL CAP IS ACCEPTABLE IN LIEU OF CONCELED CLIP.

4. OUTSIDE FACE OF METAL CAP AND PVC MEMBRANE TO EXTEND DOWN BELOW BOTTOM EDGE OF WOOD NAILER MINIMUM OF 1–1/2".

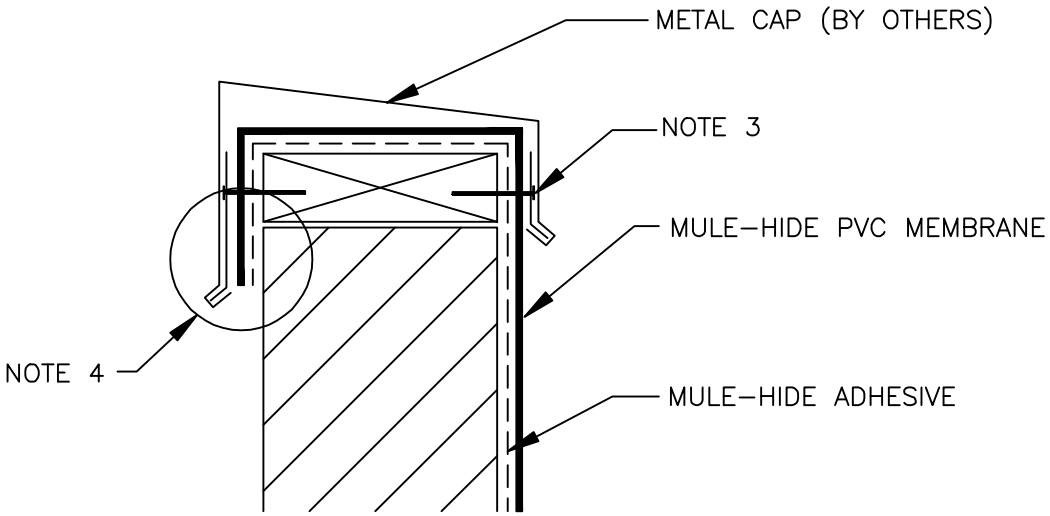

MULE-HIDE PRODUCTS CO., INC. **04/01/2007**	**METAL CAP TERMINATION SYSTEMS:** **ALL PVC**	**DETAIL NO:** **MHP-170**

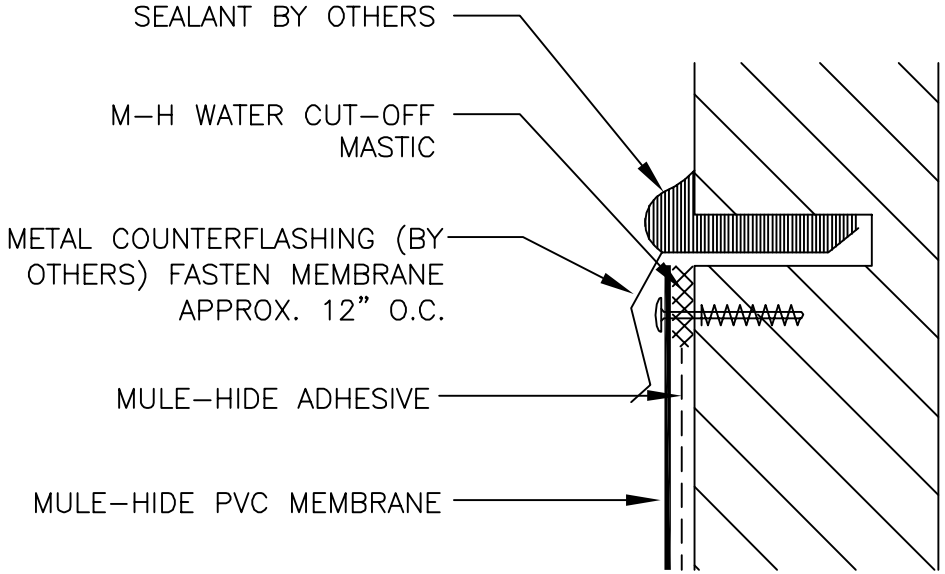

NOTES:

1. DETAILS TO BE USED IN CONJUNCTION WITH STANDARD GUIDE SPECIFCIATIONS CONTAINING REQUIREMENTS FOR NAILERS, INSULATION, SLIPSHEETS, ETC.

2. PVC EDGE SEALANT IS REQUIRED ON ALL CUT OR NON–ENCAPSULATED EDGES OF REINFORECED MEMBRANE. THIS INCLUDES FACTORY CUT MEMBRANE.

3. COUNTERFLASHING SHALL BE ELEVATED ABOVE PONDED WATER.

4. NOT FOR USE ON 15 OR 20 YEAR WARRANTY PROJECTS (REFER TO MULE–HIDE DETAIL MHP–174).

MULE-HIDE PRODUCTS CO., INC. **04/01/2007**	**REGLET COUNTERFLASHING TERMINATION**	**DETAIL NO:**
	SYSTEMS: **ALL PVC**	**MHP-171**

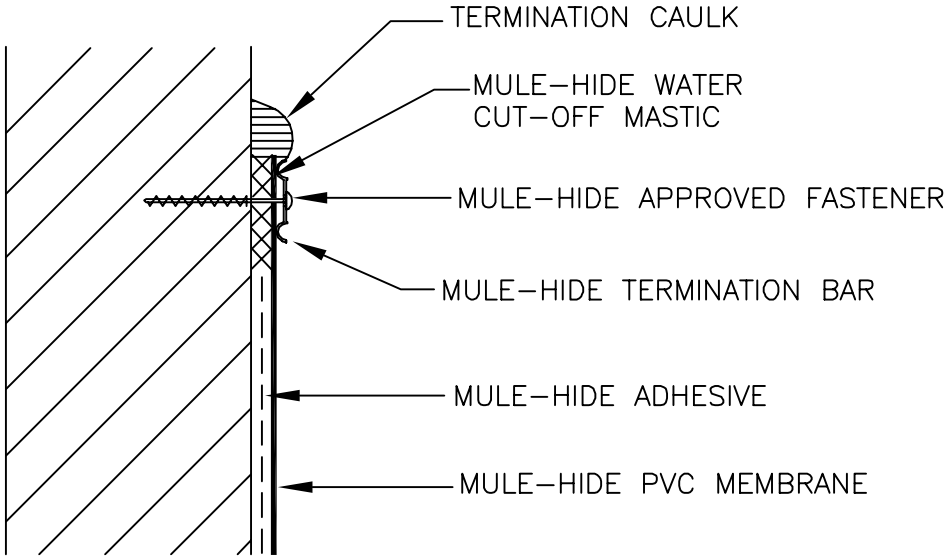

NOTES:

1. DETAILS TO BE USED IN CONJUNCTION WITH STANDARD GUIDE SPECIFCIATIONS CONTAINING REQUIREMENTS FOR NAILERS, INSULATION, SLIPSHEETS, ETC.

2. PVC EDGE SEALANT IS REQUIRED ON ALL CUT OR NON–ENCAPSULATED EDGES OF REINFORECED MEMBRANE. THIS INCLUDES FACTORY CUT MEMBRANE.

3. FASTENERS OF METAL BAR MUST PROVIDE CONSTANT COMPRESSION ON WATER CUT–OFF MASTIC.

4. ALLOW 1/4" TO 1/2" SPACING BETWEEN CONSECUTIVE LENGTHS OF TERMINATION BAR.

MULE-HIDE PRODUCTS CO., INC. **04/01/2007**	**TERMINATION BAR**	**DETAIL NO:**
	SYSTEMS: **ALL PVC**	**MHP-172**

NOTES:

1. DETAILS TO BE USED IN CONJUNCTION WITH STANDARD GUIDE SPECIFCIATIONS CONTAINING REQUIREMENTS FOR NAILERS, INSULATION, SLIPSHEETS, ETC.

2. PVC EDGE SEALANT IS REQUIRED ON ALL CUT OR NON-ENCAPSULATED EDGES OF REINFORECED MEMBRANE. THIS INCLUDES FACTORY CUT MEMBRANE.

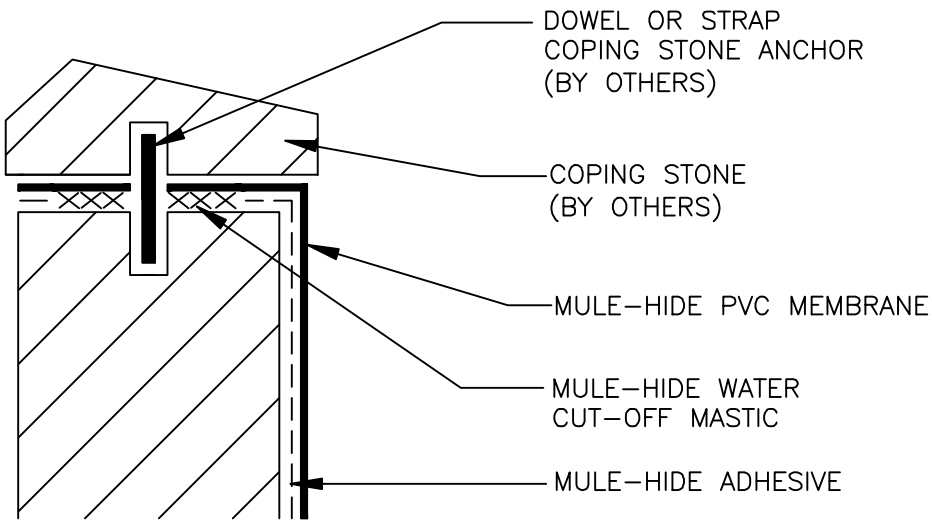

MULE-HIDE PRODUCTS CO., INC. **04/01/2007**	**COPING STONE SYSTEMS:** **ALL PVC**	**DETAIL NO:** **MHP-173**

FOR USE ON 15 AND 20 YEAR WARRANTY PROJECTS. TERMINATION BAR IS NOT REQUIRED ON 10 YEAR WARRANTY PROJECTS (REFER TO MULE-HIDE DETAIL MHP-171)

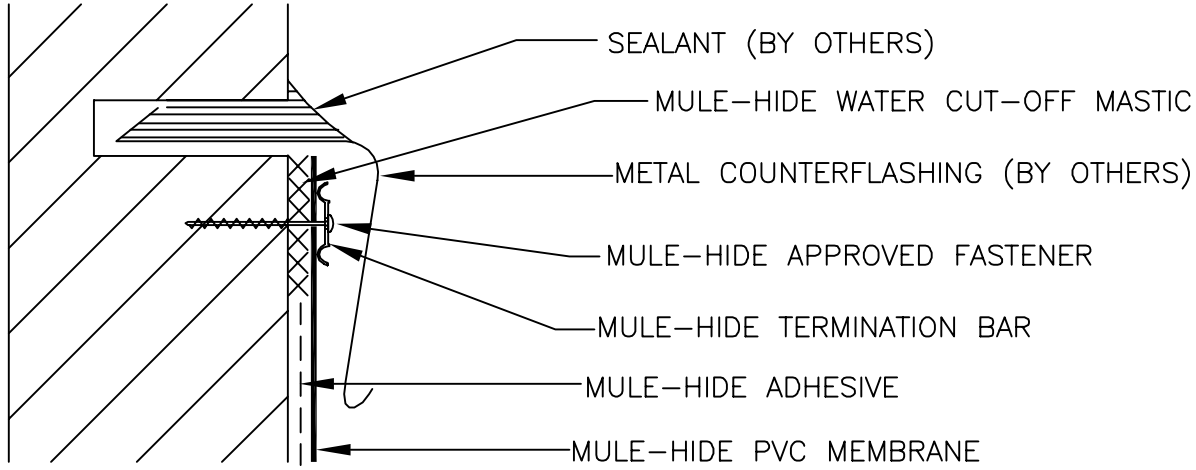

NOTES:

1. DETAILS TO BE USED IN CONJUNCTION WITH STANDARD GUIDE SPECIFCIATIONS CONTAINING REQUIREMENTS FOR NAILERS, INSULATION, SLIPSHEETS, ETC.

2. PVC EDGE SEALANT IS REQUIRED ON ALL CUT OR NON-ENCAPSULATED EDGES OF REINFORECED MEMBRANE. THIS INCLUDES FACTORY CUT MEMBRANE.

3. APPLY ON HARD SMOOTH SURFACE ONLY; NOT FOR USE ON WOOD.

4. DO NOT WRAP COMPRESSION TERMINATION AROUND CORNERS.

MULE-HIDE PRODUCTS CO., INC. 04/01/2007	**15 AND 20 YEAR WARRANTY MECHANICAL TERMINATION**	**DETAIL NO:**
	SYSTEMS:	**MHP-174**
	ALL PVC	

NOTES:

1. DETAILS TO BE USED IN CONJUNCTION WITH STANDARD GUIDE SPECIFICATIONS CONTAINING REQUIREMENTS FOR NAILERS, INSULATION, SLIP SHEETS, ETC.

2. SURFACE MOUNTED COUNTERFLASHING MUST BE INSTALLED TO HARD, SMOOTH NON–POROUS SUBSTRATE.

3. DO NOT APPLY ALL PURPOSE SEALANT OVER ASPHALT OR OTHER MATERIALS THAT WILL PREVENT PROPER ADHESION.

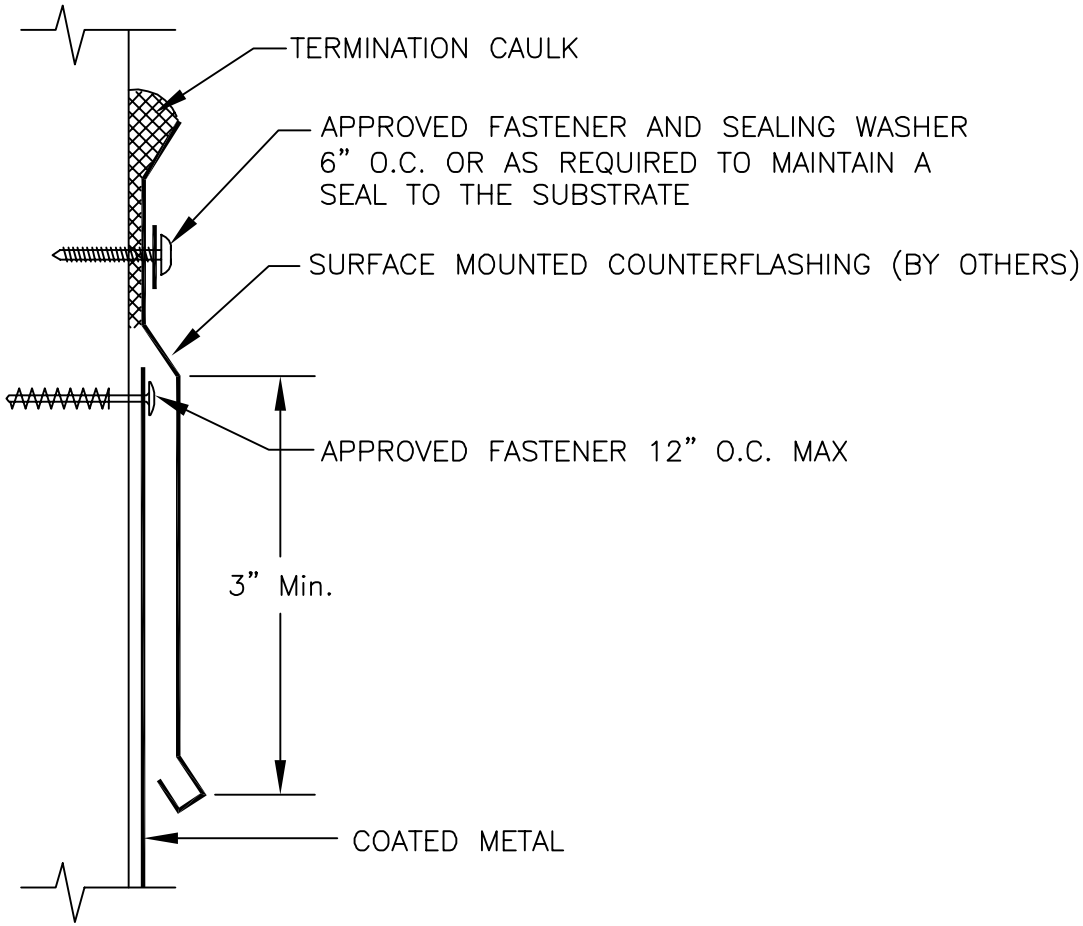

MULE-HIDE PRODUCTS CO., INC.	**SURFACE MOUNTED METAL COUNTERFLASHING**	**DETAIL NO:**
04/01/2007	**SYSTEMS:**	**MHP-175**
	ALL PVC	

NOTES:

1. DETAILS TO BE USED IN CONJUNCTION WITH STANDARD GUIDE SPECIFCIATIONS CONTAINING REQUIREMENTS FOR NAILERS, INSULATION, SLIPSHEETS, ETC.

2. PVC EDGE SEALANT IS REQUIRED ON ALL CUT OR NON–ENCAPSULATED EDGES OF REINFORECED MEMBRANE. THIS INCLUDES FACTORY CUT MEMBRANE.

3. MEMBRANE TO EXTEND OUNTO OUTSIDE FACE OF WALL MINIMUM OF 2" TO PREVENT SPALLING OF CONCRETE WHILE DRILLING.

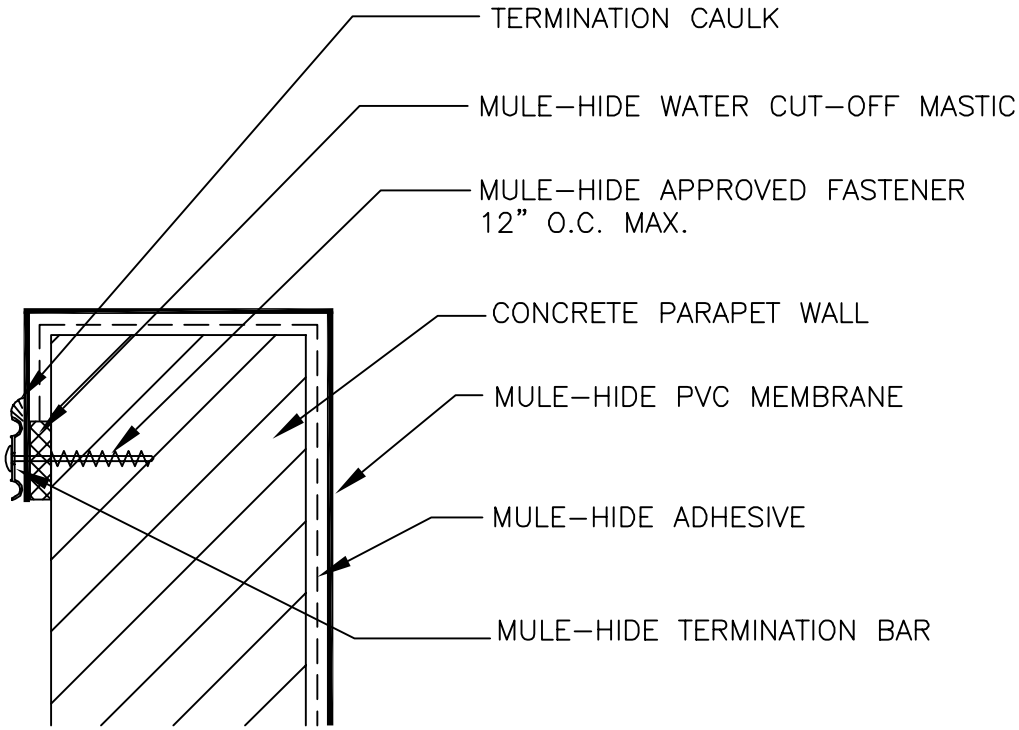

MULE-HIDE PRODUCTS CO., INC. **04/01/2007**	**CONCRETE PARAPET WALL WITH TERMINATION BAR**	**DETAIL NO:**
	SYSTEMS: **ALL PVC**	**MHP-176**

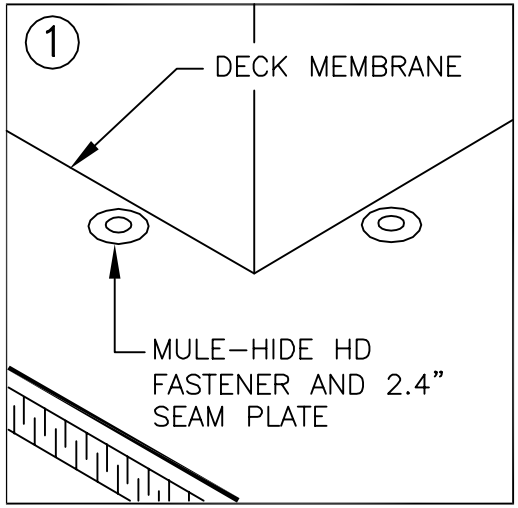

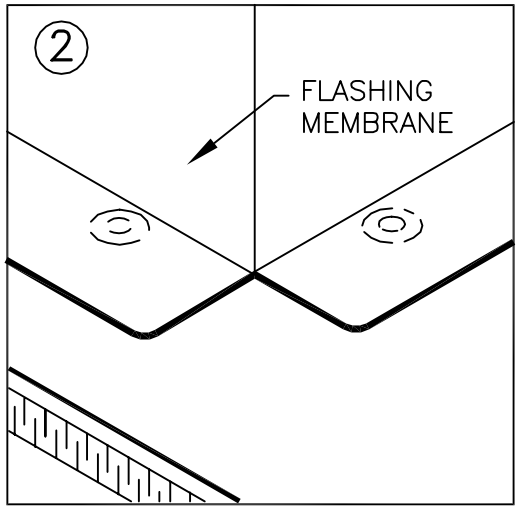

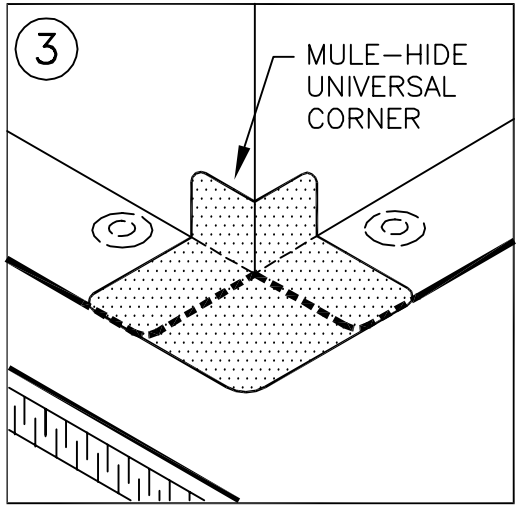

NOTES:

1. DETAILS TO BE USED IN CONJUNCTION WITH STANDARD GUIDE SPECIFCIATIONS CONTAINING REQUIREMENTS FOR NAILERS, INSULATION, SLIPSHEETS, ETC.

2. PVC EDGE SEALANT IS REQUIRED ON ALL CUT OR NON–ENCAPSULATED EDGES OF REINFORECED MEMBRANE. THIS INCLUDES FACTORY CUT MEMBRANE.

3. BEGIN INSTALLATION OF SEAM PLATES APPROXIMATELY 6" FROM CORNER.

4. POSITION SEAM PLATES 1/2" TO 1" FROM EDGE OF FIELD MEMBRANE.

MULE-HIDE PRODUCTS CO., INC. 2010	***PRE-MOLDED OUTSIDE CORNER SYSTEMS:*** ***ALL PVC***	***DETAIL NO:*** ***MHP-180***

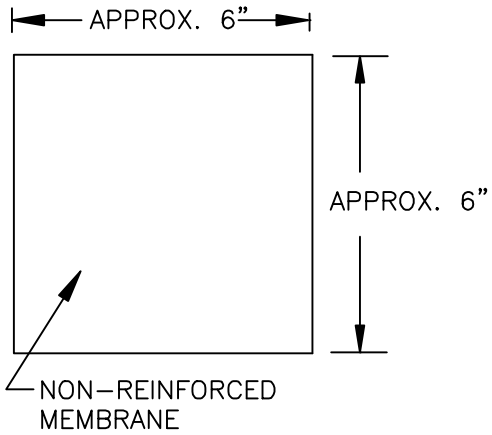

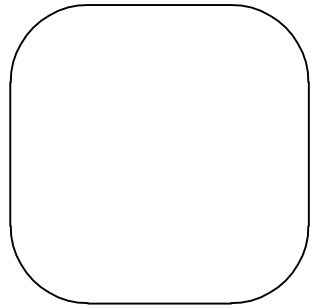

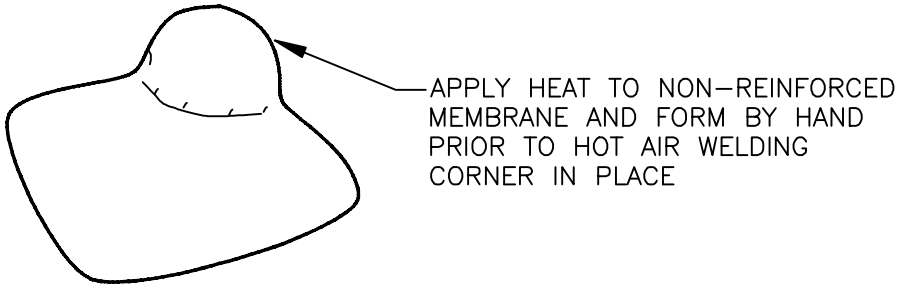

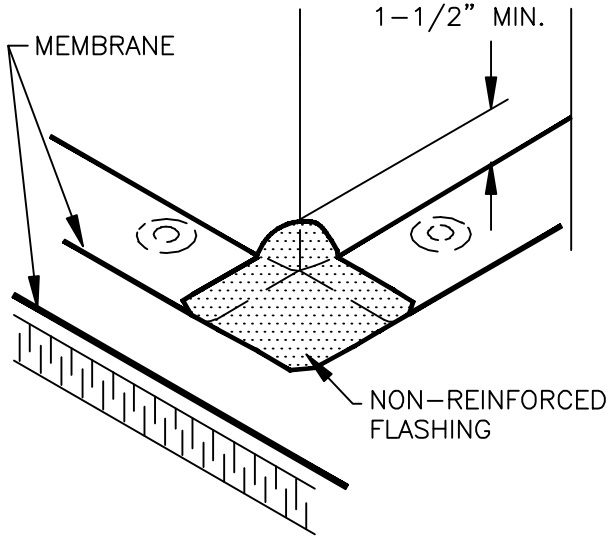

POSITION AND HEAT WELD
CORNER IN PLACE AS SHOWN

NOTES:

1. DETAILS TO BE USED IN CONJUNCTION WITH STANDARD GUIDE SPECIFCIATIONS CONTAINING REQUIREMENTS FOR NAILERS, INSULATION, SLIPSHEETS, ETC.

2. PVC EDGE SEALANT IS REQUIRED ON ALL CUT OR NON–ENCAPSULATED EDGES OF REINFORECED MEMBRANE. THIS INCLUDES FACTORY CUT MEMBRANE.

MULE-HIDE PRODUCTS CO., INC.	**FIELD FABRICATED OUTSIDE CORNER**	**DETAIL NO:**
04/01/2007	**SYSTEMS:**	**MHP-181**
	ALL PVC	

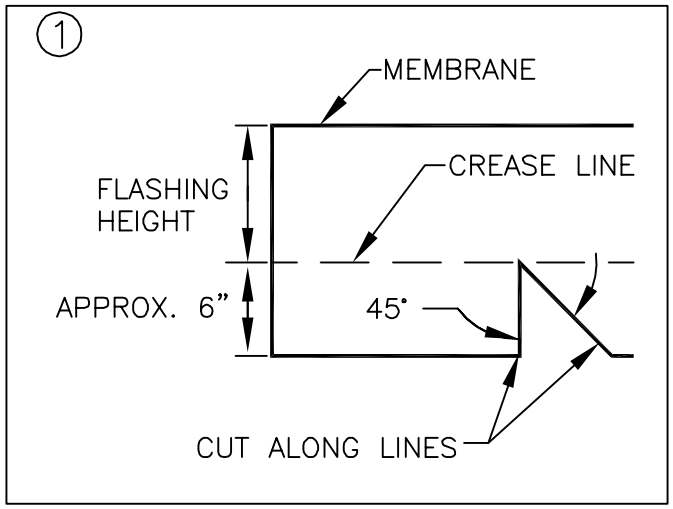

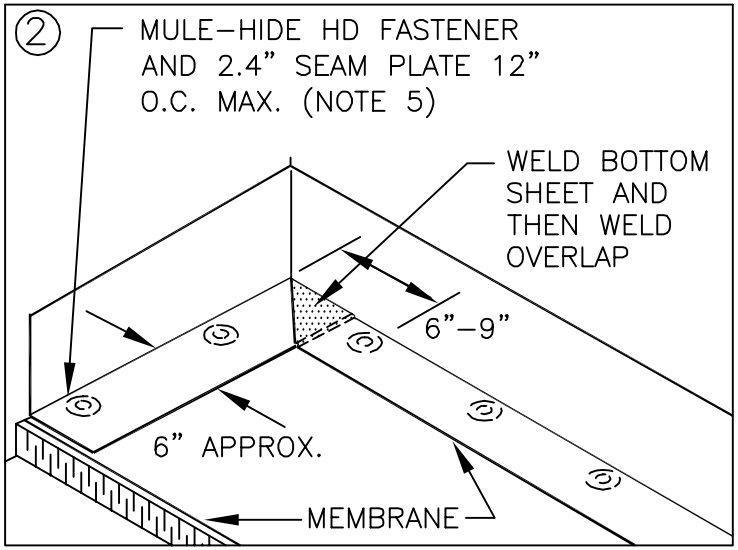

NOTES:

1. DETAILS TO BE USED IN CONJUNCTION WITH STANDARD GUIDE SPECIFCIATIONS CONTAINING REQUIREMENTS FOR NAILERS, INSULATION, SLIPSHEETS, ETC.

2. PVC EDGE SEALANT IS REQUIRED ON ALL CUT OR NON-ENCAPSULATED EDGES OF REINFORECED MEMBRANE. THIS INCLUDES FACTORY CUT MEMBRANE.

3. BEGIN INSTALLATION OF SEAM PLATES 6" TO 9" FROM THE CORNER.

4. POSITION SEAM PLATES 1/2" TO 1" FROM EDGE OF MEMBRANE.

5. REFER TO MULE-HIDE UPLIFT RATINGS FOR APPROPRIATE FASTENER SIZE, AND SPACING.

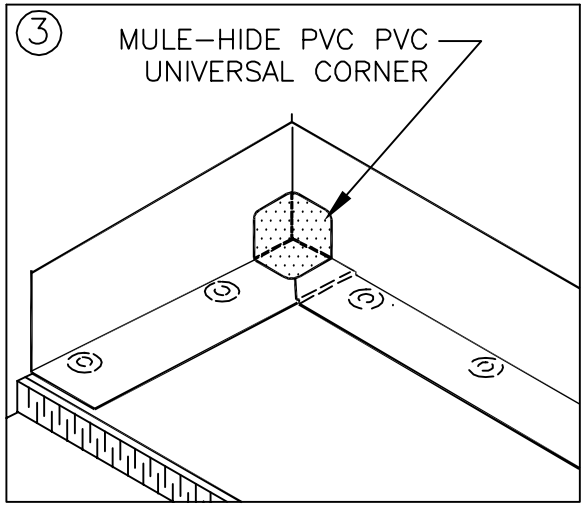

MULE-HIDE PRODUCTS CO., INC. 2010	***PRE-MOLDED INSIDE CORNER FLASHING***	***DETAIL NO:***
	SYSTEMS:	***MHP-182***
	ALL PVC	

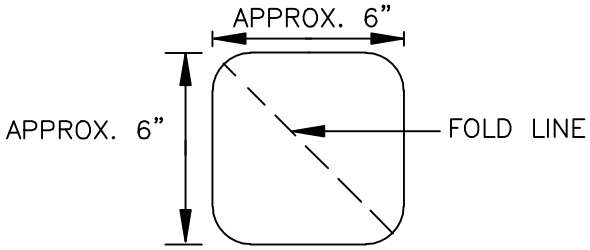

① CUT A SECTION OF NON–REINFORCED MEMBRANE WITH ROUNDED CORNERS OR USE INSIDE/OUTSIDE CORNER; FOLD ALONG LINE AS INDICATED

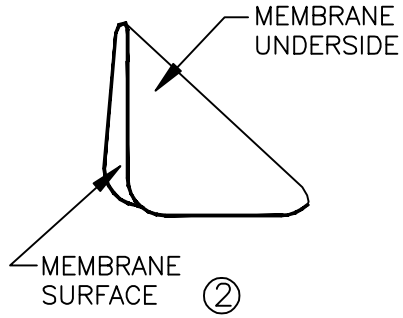

②

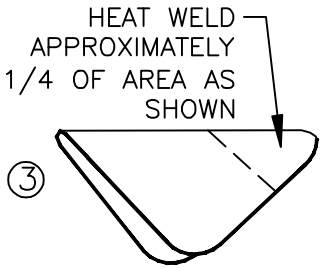

③

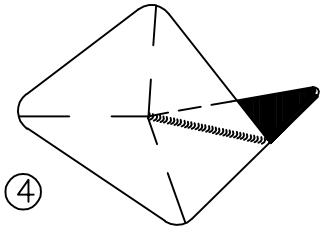

④

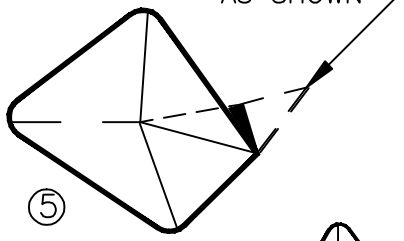

⑤

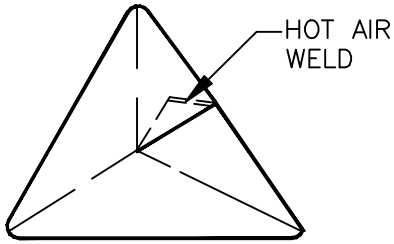

⑥ POSITION AND HEAT WELD CORNER IN PLACE AS SHOWN

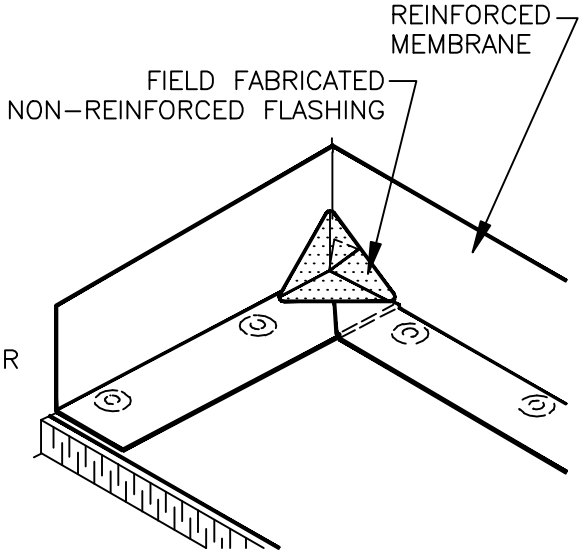

NOTES:

1. DETAILS TO BE USED IN CONJUNCTION WITH STANDARD GUIDE SPECIFCIATIONS CONTAINING REQUIREMENTS FOR NAILERS, INSULATION, SLIPSHEETS, ETC.

2. PVC EDGE SEALANT IS REQUIRED ON ALL CUT OR NON–ENCAPSULATED EDGES OF REINFORECED MEMBRANE. THIS INCLUDES FACTORY CUT MEMBRANE.

MULE-HIDE PRODUCTS CO., INC. **04/01/2007**	**FIELD FABRICATED INSIDE CORNER** **SYSTEMS:** **ALL PVC**	**DETAIL NO:** **MHP-183**

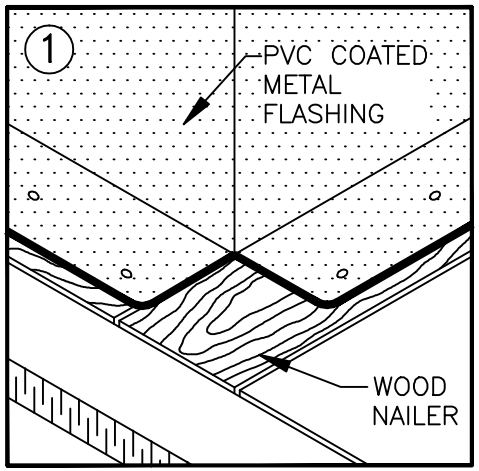

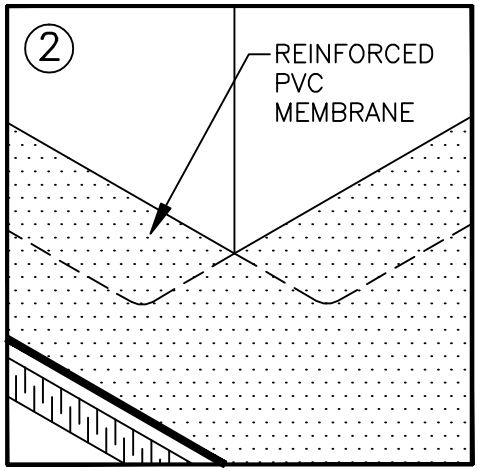

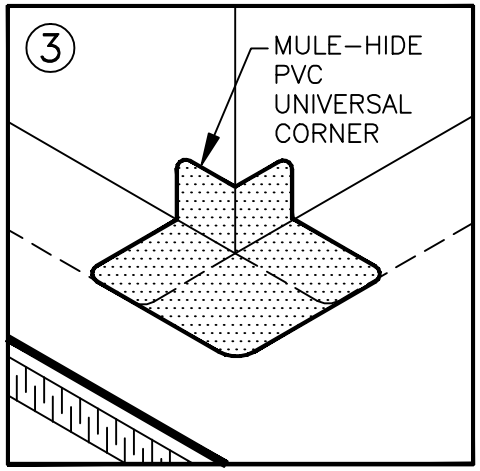

NOTES:

1. DETAILS TO BE USED IN CONJUNCTION WITH STANDARD GUIDE SPECIFCIATIONS CONTAINING REQUIREMENTS FOR NAILERS, INSULATION, SLIPSHEETS, ETC.

2. PVC EDGE SEALANT IS REQUIRED ON ALL CUT OR NON–ENCAPSULATED EDGES OF REINFORECED MEMBRANE. THIS INCLUDES FACTORY CUT MEMBRANE.

3. FASTEN COATED METAL FLASHING TO WOOD NAILERS USING RINK SHANK NAILS SPACED 6 INCHES O.C., STAGGERED 1/2".

REFER TO MULE–HIDE DETAIL MHP–185 FOR FLASHING VERTICAL JOINTS IN COATED METAL.

MULE-HIDE PRODUCTS CO., INC. **04/01/2007**	**PRE-MOLDED OUTSIDE CORNER ON COATED METAL WALL FLASHING**	**DETAIL NO:**
	SYSTEMS: **ALL PVC**	**MHP-184**

①

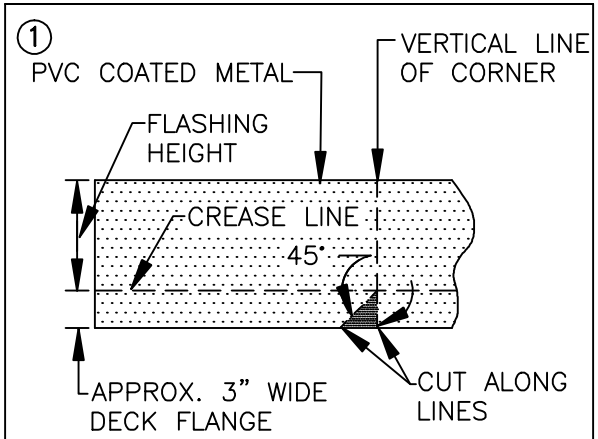

CREASE PVC COATED METAL FLASHING ALONG DASHED LINES AFTER CUTTING AND REMOVING SHADED TRIANGLE.

②

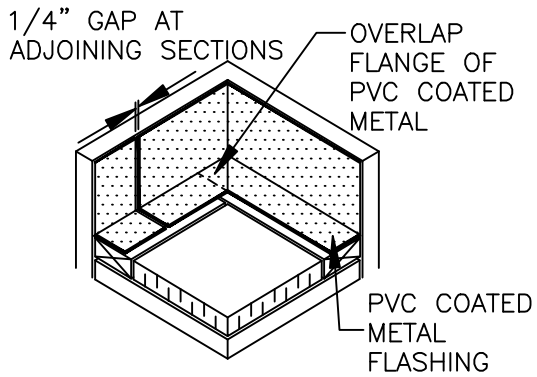

OVERLAP FLANGE AT CORNER AND FASTEN TO WOOD NAILERS USING 1–1/4" RING SHANK NAILS SPACED 6" O.C., STAGGERED 1/2".

③

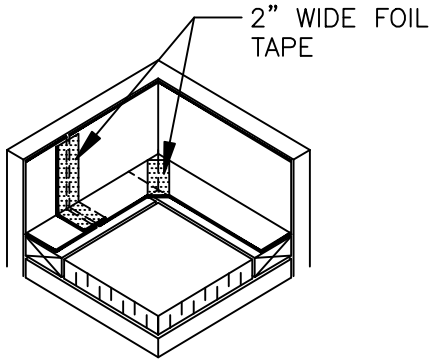

INSTALL 2" WIDE FOIL TAPE OVER VERTICAL JOINT IN PVC COATED METAL AND OVER CUT EDGE AT CORNER AS SHOWN.

④

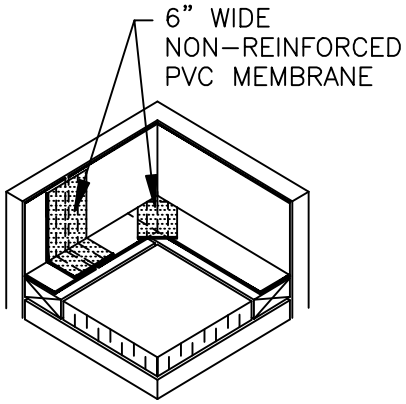

HEAT WELD 6" WIDE PIECE OF REINFORCED PVC MEMBRANE OVER FOIL TAPE.

⑤

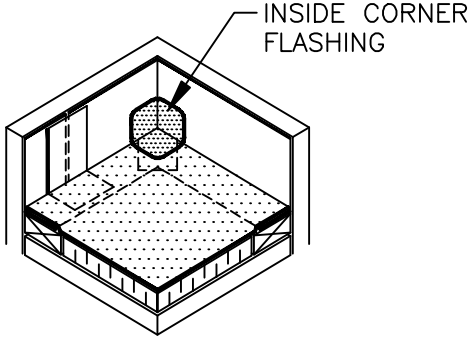

INSTALL PVC FIELD MEMBRANE AND HEAT WELD TO FLANGE OF PVC COATED METAL. ALSO INSTALL INSIDE CORNER FLASHING PER MULE–HIDE DETAILS MHP–182 OR MHP–183.

NOTE:

1. DETAILS TO BE USED IN CONJUNCTION WITH STANDARD GUIDE SPECIFCIATIONS CONTAINING REQUIREMENTS FOR NAILERS, INSULATION, SLIPSHEETS, ETC.

2. PVC EDGE SEALANT IS REQUIRED ON ALL CUT OR NON–ENCAPSULATED EDGES OF REINFORECED MEMBRANE. THIS INCLUDES FACTORY CUT MEMBRANE.

3. DUCT TAPE MAY BE SUBSTITUTED FOR FOIL TAPE.

MULE-HIDE PRODUCTS CO., INC. **04/01/2007**	**INSIDE CORNER WITH COATED METAL WALL FLASHING**	**DETAIL NO:**
	SYSTEMS:	**MHP-185**
	ALL PVC	

NOTES:

1. DETAILS TO BE USED IN CONJUNCTION WITH STANDARD GUIDE SPECIFCIATIONS CONTAINING REQUIREMENTS FOR NAILERS, INSULATION, SLIPSHEETS, ETC.

2. PVC EDGE SEALANT IS REQUIRED ON ALL CUT OR NON–ENCAPSULATED EDGES OF REINFORECED MEMBRANE. THIS INCLUDES FACTORY CUT MEMBRANE.

3. REFER TO SPECIFICATIONS FOR REQUIRED NUMBER OF PERIMETER SHEETS AND MEMBRANE FASTENING.

4. SECUREMENT NOT REQUIRED AT END ROLL SECTIONS; OVERLAP MEMBRANE 2" TO 3". REFER TO MULE–HIDE DETAIL MHP–110.

5. FOR INSULATION SECUREMENT, REFER TO MULE–HIDE DETAIL MHP–206.

6. MEMBRANE ATTACHMENT IN CORNERS MUST BE INCREASED ABOVE PERIMETER ATTACHMENT REQUIREMENTS TO COMPENSATE FOR THE HIGHER UPLIFT PRESSURES PRESENT AT BUILDING CORNERS.

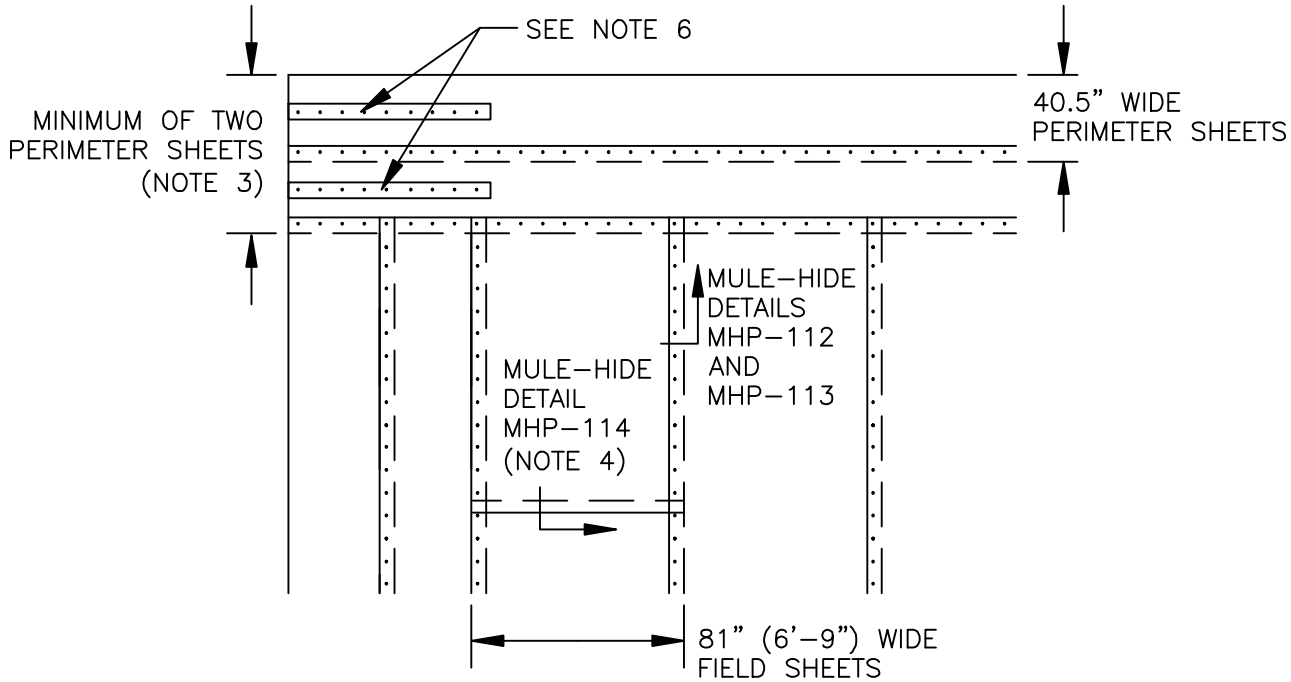

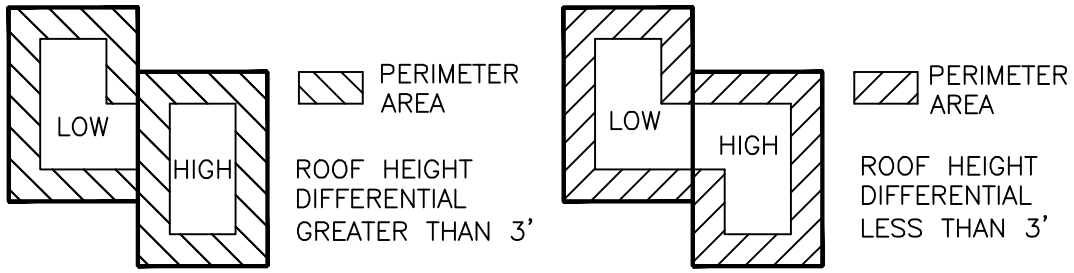

MULE-HIDE PRODUCTS CO., INC. **04/01/2007**	**MEMBRANE SECUREMENT SYSTEMS:** **MECHANICALLY FASTENED PVC**	**DETAIL NO:** **MHP-186**

NOTES

1. DETAILS TO BE USED IN CONJUNCTION WITH STANDARD GUIDE SPECIFCIATIONS CONTAINING REQUIREMENTS FOR NAILERS, INSULATION, SLIPSHEETS, ETC.

2. PVC EDGE SEALANT IS REQUIRED ON ALL CUT OR NON-ENCAPSULATED EDGES OF REINFORECED MEMBRANE. THIS INCLUDES FACTORY CUT MEMBRANE.

3. RIDGE MEMBRANE ATTACHMENT IS ONLY REQUIRED WHEN ROOF SLOPE EXCEEDS 3" TO ONE HORIZONTAL FOOT.

4. POSITION 2.4" SEAM PLATES 1/2" MINIMUM TO 1" MAXIMUM FROM THE EDGE OF THE DECK MEMBRANE.

5. REFER TO SPECIFICATION FOR ACCEPTABLE MULE-HIDE FASTENERS AND PLATES AND OTHER FASTENING DENSITIES.

6. REFER TO MULE-HIDE UPLIFT RATINGS FOR APPROPRIATE FASTENER SIZE, AND SPACING.

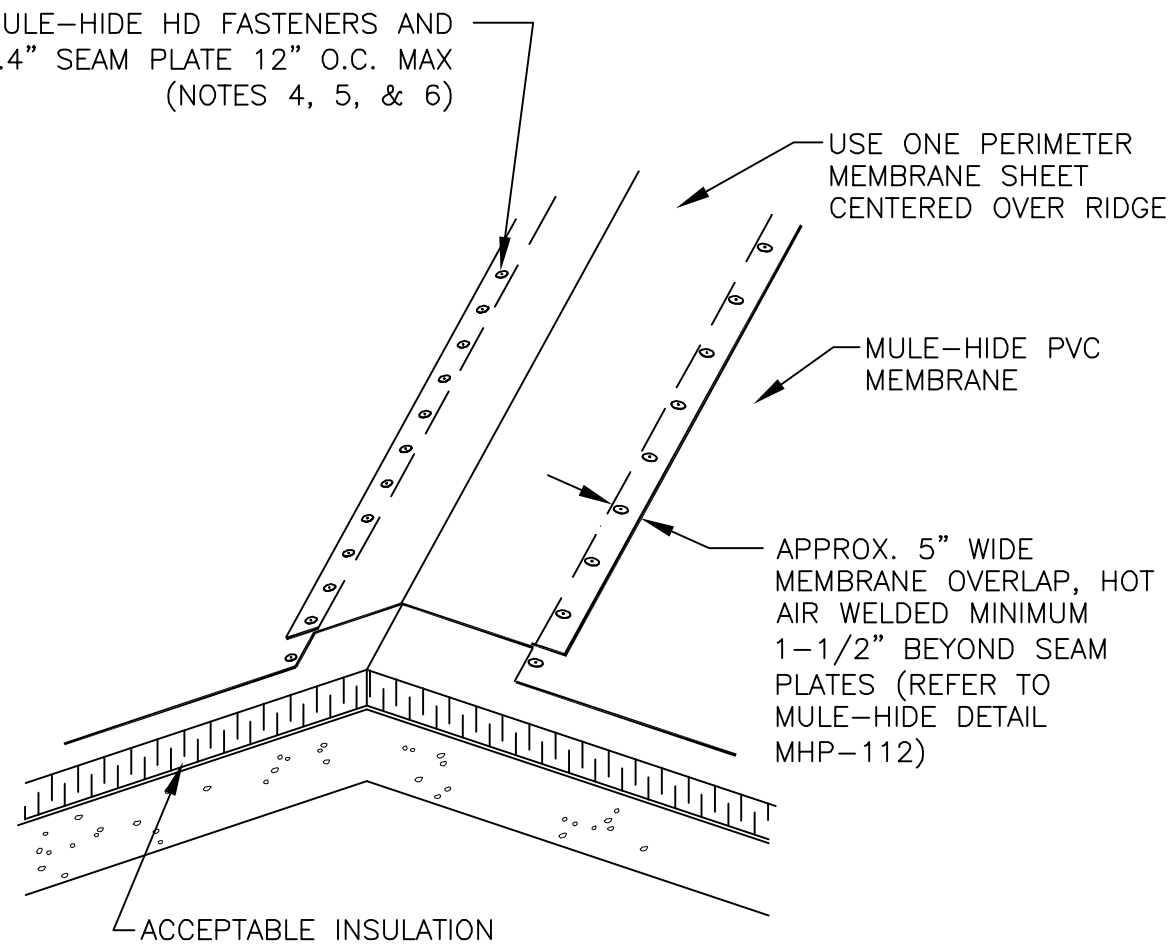

MULE-HIDE PRODUCTS CO., INC. 2010	***RIDGE MEMBRANE ATTACHMENT SYSTEMS:*** ***MECHANICALLY FASTENED PVC***	***DETAIL NO:*** ***MHP-190***

NOTES:

1. DETAILS TO BE USED IN CONJUNCTION WITH STANDARD GUIDE SPECIFICATIONS CONTAINING REQUIREMENTS FOR NAILERS, INSULATION, SLIPSHEETS, ETC.

2. SPECIFIER/APPLICATOR MUST DETERMINE APPROPRIATE EQUIPMENT SUPPORT TO BE USED.

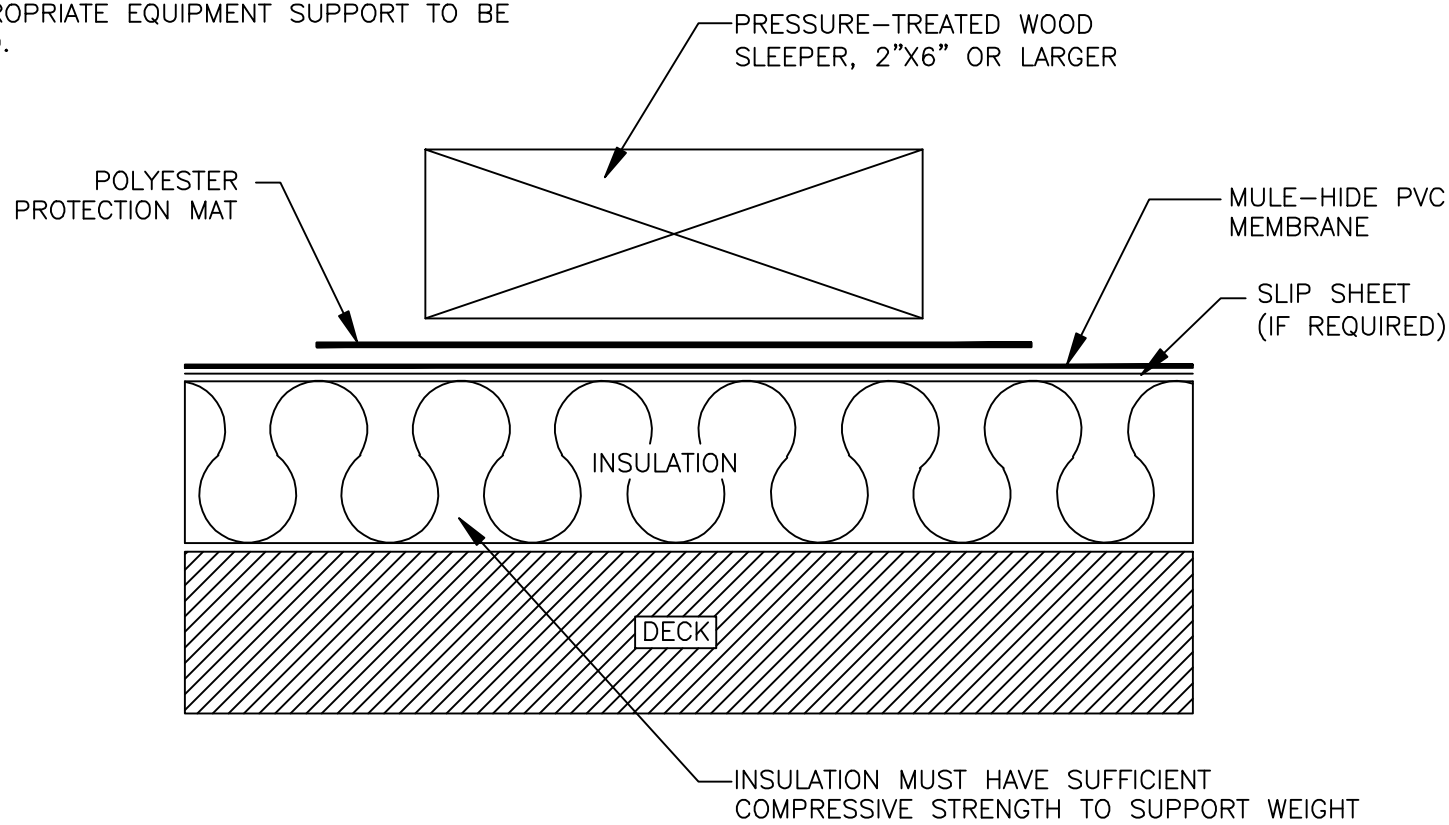

MULE-HIDE PRODUCTS CO., INC.	**SLEEPER SUPPORT (LIGHT WEIGHT)**	**DETAIL NO:**
04/01/2007	**SYSTEMS:**	**MHP-191**
	ALL PVC	

NOTES:

1. DETAILS TO BE USED IN CONJUNCTION WITH STANDARD GUIDE SPECIFICATIONS CONTAINING REQUIREMENTS FOR NAILERS, INSULATION, SLIPSHEETS, ETC.

2. PVC EDGE SEALANT IS REQUIRED ON ALL CUT EDES OR NON–ENCAPSULATED EDGES OF REINFORCED MEMBRANE. THIS INCLUDES FACTORY CUT MEMBRANE.

3. SPECIFIER/APPLICATOR MUST DETERMINE APPROPRIATE EQUIPMENT SUPPORT TO BE USED.

4. WHEN UTILIZING MULE–HIDE PVC MEMBRANE, THE ROOFING SHEET MAY BE ATTACHED WITH APPROVED FASTENERS AND PLATES AS A BASE TIE–IN. SEE DETAIL MHP–120

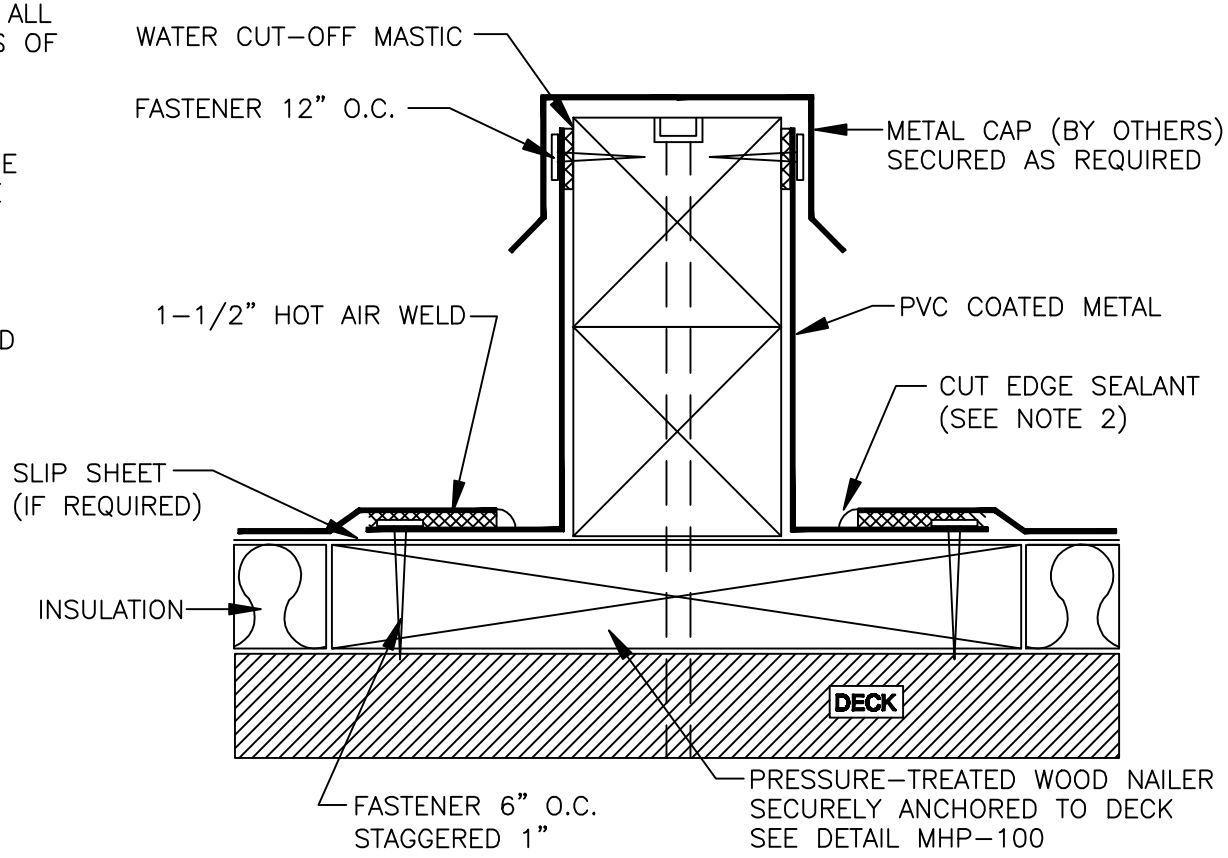

MULE-HIDE PRODUCTS CO., INC. **04/01/2007**	**SLEEPER SUPPORT (HEAVY WEIGHT)** **SYSTEMS:** **ALL PVC**	**DETAIL NO:** **MHP-192**

NOTES:

1. DETAILS TO BE USED IN CONJUNCTION WITH STANDARD GUIDE SPECIFICATIONS CONTAINING REQUIREMENTS FOR NAILERS, INSULATION, SLIPSHEETS, ETC.

2. PVC EDGE SEALANT IS REQUIRED ON ALL CUT EDES OR NON–ENCAPSULATED EDGES OF REINFORCED MEMBRANE. THIS INCLUDES FACTORY CUT MEMBRANE.

3. SPECIFIER/APPLICATOR MUST DETERMINE APPROPRIATE EQUIPMENT SUPPORT TO BE USED.

4. REFER TO MULE–HIDE UPLIFT RATINGS FOR APPROPRIATE FASTENER SIZE, AND SPACING.

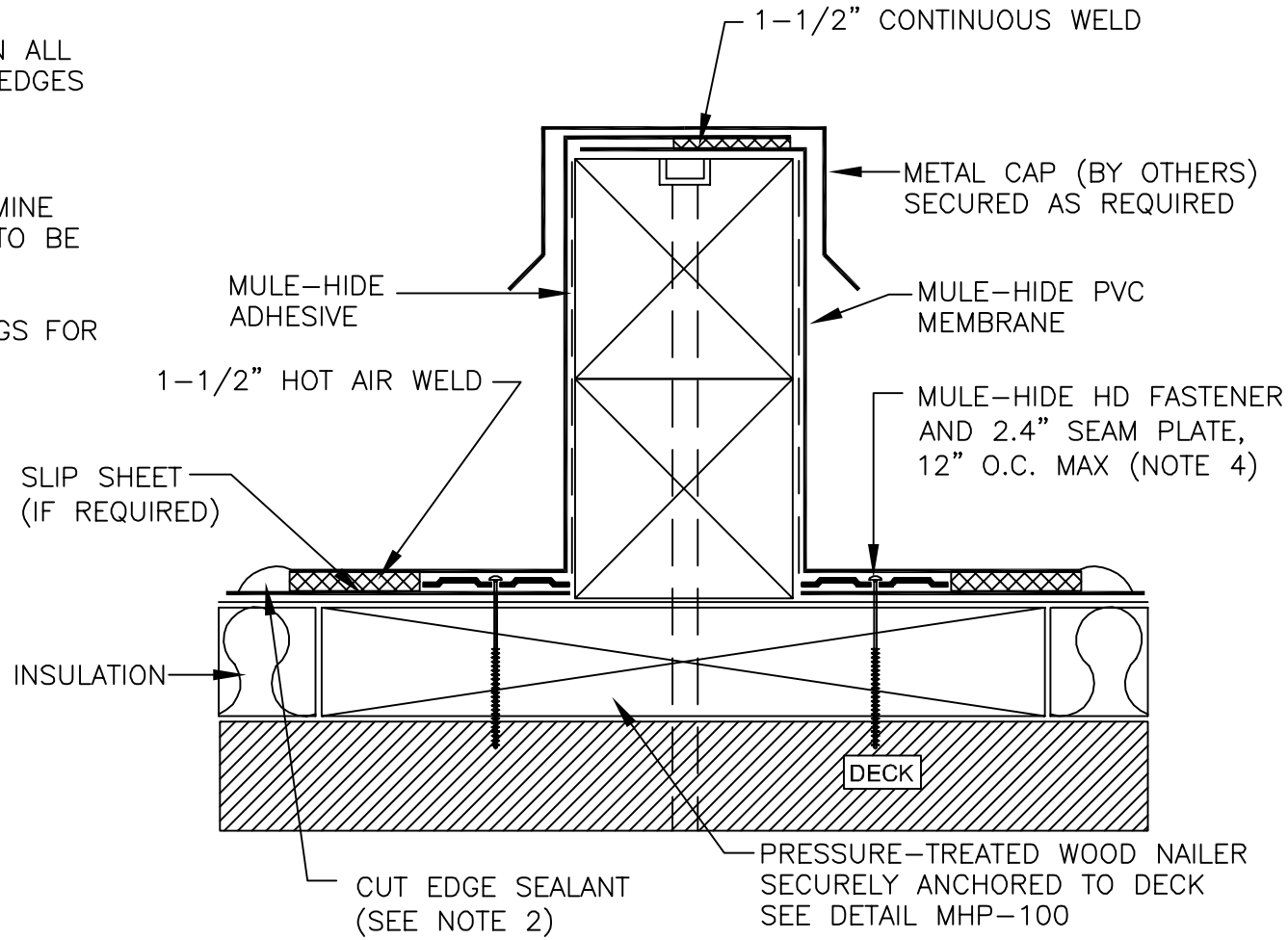

MULE-HIDE PRODUCTS CO., INC. 2010	***SLEEPER SUPPORT (HEAVY WEIGHT)***	***DETAIL NO:***
	SYSTEMS:	***MHP-193***
	ALL PVC	

NOTES:

1. DETAILS TO BE USED IN CONJUNCTION WITH STANDARD GUIDE SPECIFICATIONS CONTAIINING REQUIREMENTS FOR NAILERS, INSULATION, SLIPSHEETS, ETC.

2. PVC EDGE SEALANT IS REQUIRED ON ALL CUT OR NON–ENCAPSULATED EDGES OF REINFORCED MEMBRANE. THIS INCLUDES FACTORY CUT MEMBRANE.

3. MH–100 WALKWAY IS NOT INTENDED FOR USE IN HEAVY TRAFFIC AREAS.

4. THE MH–100 WALKWAY MUST NOT BE INSTALLED OVER FIELD SEAMS AND FASTENER ROWS AND MUST BE GAPPED FROM THESE AREAS A MINIMUM OF 6".

5. ALL ADJACENT AND ABUTTING WALKWAY RUNS MUST BE GAPPED A MINIUM OF 6" AND MUST NOT BE OVERLAPPED.

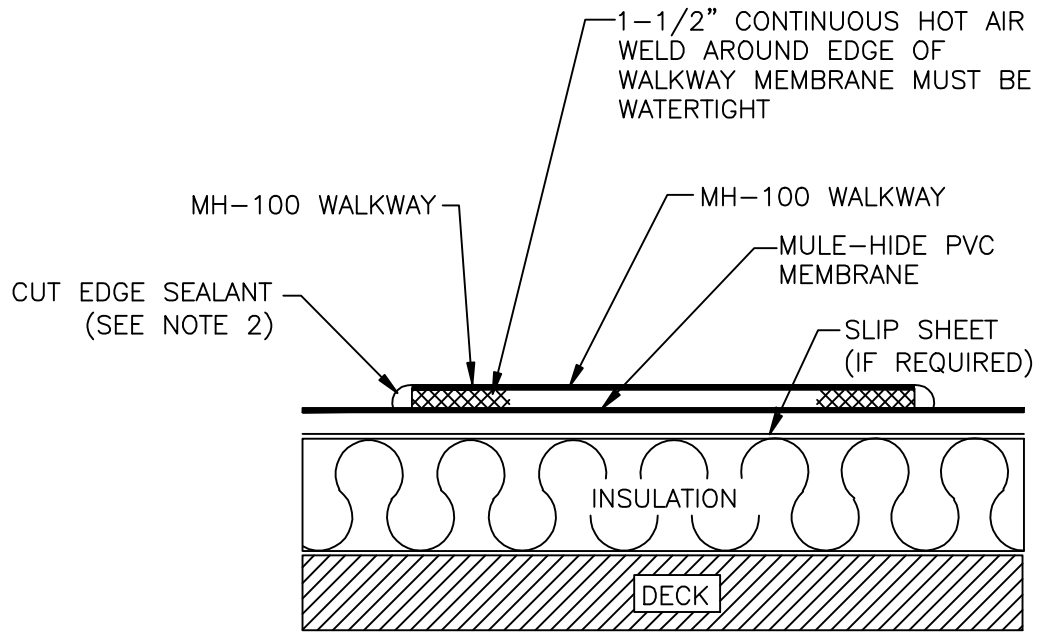

MULE-HIDE PRODUCTS CO., INC. **04/01/2007**	**MH-100 WALKWAY SYSTEMS:** **ALL PVC**	**DETAIL NO:** **MHP-194**

NOTES:

1. DETAILS TO BE USED IN CONJUNCTION WITH STANDARD GUIDE SPECIFICATIONS CONTAIINING REQUIREMENTS FOR NAILERS, INSULATION, SLIPSHEETS, ETC.

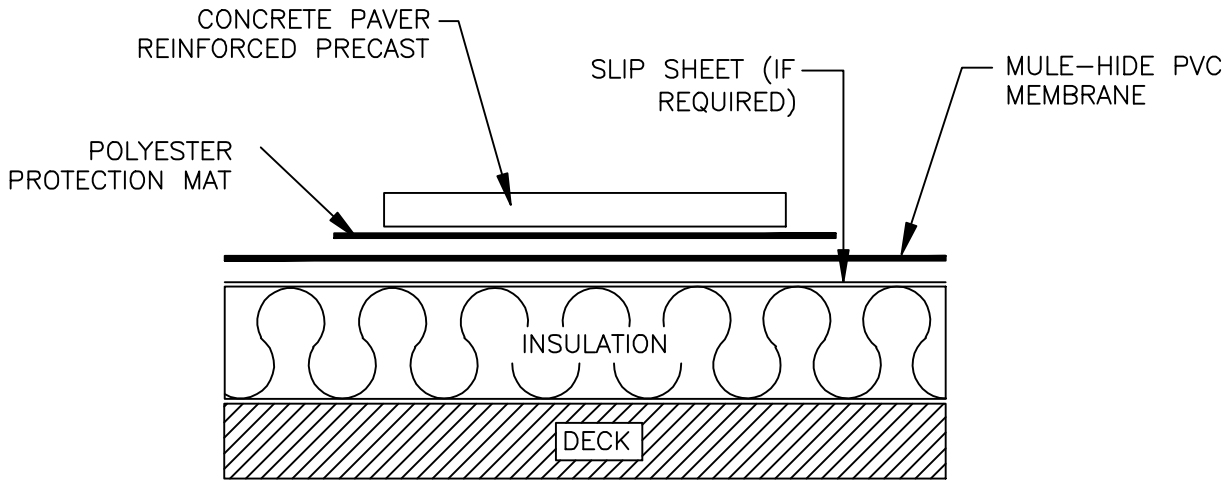

MULE-HIDE PRODUCTS CO., INC. **04/01/2007**	**CONCRETE PAVER WALKWAY SYSTEMS:** **ALL PVC**	**DETAIL NO:** **MHP-195**

NOTES:

1. DETAILS TO BE USED IN CONJUNCTION WITH STANDARD GUIDE SPECIFICATIONS CONTAIINING REQUIREMENTS FOR NAILERS, INSULATION, SLIPSHEETS, ETC.

2. TERMINATION BAR MUST BE INSTALLED TO HARD, SMOOTH NON–POROUS SUBSTRATE.

3. DO NOT APPLY TERMINATION CAULK OVER ASPHALT OR OTHER MATERIALS THAT WILL PREVENT PROPER ADHESION.

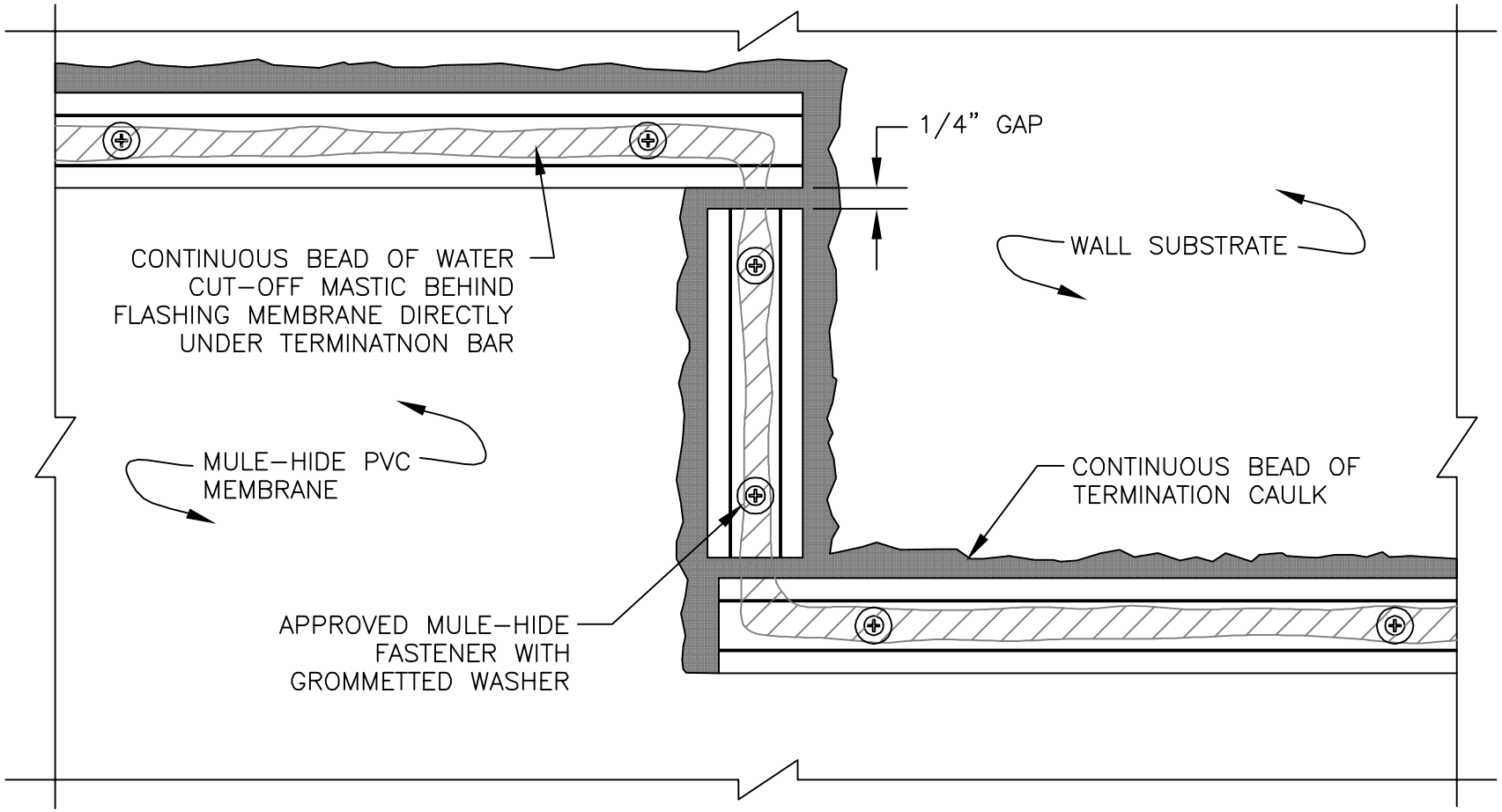

MULE-HIDE PRODUCTS CO., INC. **04/01/2007**	**TERMINATION ELEVATION CHANGE**	**DETAIL NO:**
	SYSTEMS: **ALL PVC**	**MHP-196**

NOTES:

1. DETAILS TO BE USED IN CONJUNCTION WITH STANDARD GUIDE SPECIFICATIONS CONTAINING REQUIREMENTS FOR NAILERS, INSULATION, SLIP SHEETS, ETC.

2. TERMINATION BAR MUST BE INSTALLED TO HARD, SMOOTH NON–POROUS SUBSTRATE.

3. DO NOT APPLY TERMINATION CAULK OVER ASPHALT OR OTHER MATERIALS THAT WILL PREVENT PROPER ADHESION.

4. TERMINATION BAR MUST BE CUT AT EACH WALL JOINT

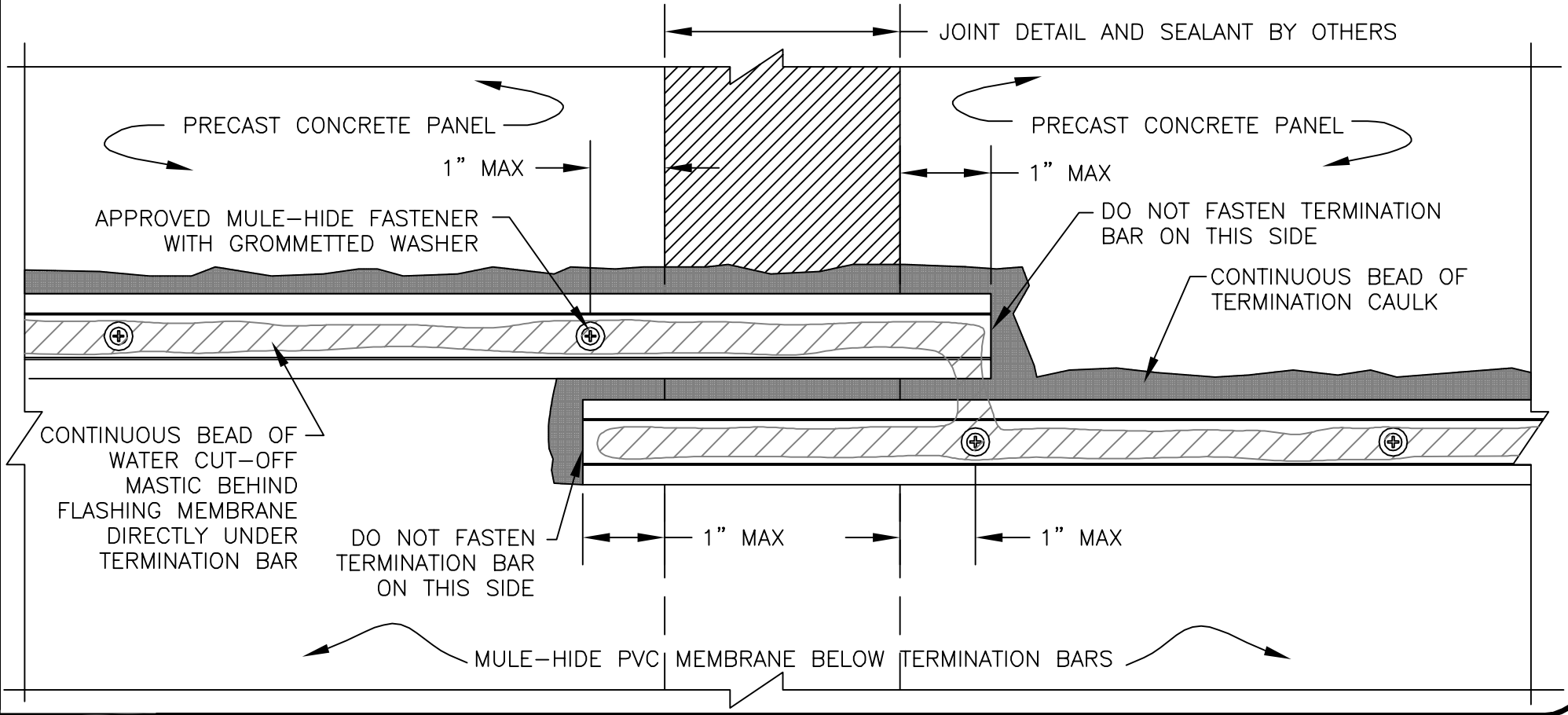

MULE-HIDE PRODUCTS CO., INC. **04/01/2007**	**TERMINATION BAR AT TILT-UP WALL JOINT**	**DETAIL NO:**
	SYSTEMS: **ALL PVC**	**MHP-197**

NOTES:

1. DETAILS TO BE USED IN CONJUNCTION WITH STANDARD GUIDE SPECIFICATIONS CONTAIINING REQUIREMENTS FOR NAILERS, INSULATION, SLIPSHEETS, ETC.

2. TERMINATION BAR MUST BE INSTALLED TO HARD, SMOOTH NON–POROUS SUBSTRATE.

3. DO NOT APPLY TERMINATION CAULK OVER ASPHALT OR OTHER MATERIALS THAT WILL PREVENT PROPER ADHESION.

4. A MINIMUM OF 2 FASTENERS IS REQUIRED FOR EACH PIECE OF TERMINATION BAR OR 12" O.C. MAX.

5. IF MASONRY FASTENERS ARE USED, FASTENER MAY BE MOVED TO 2" MAXIMUM FROM CORNER.

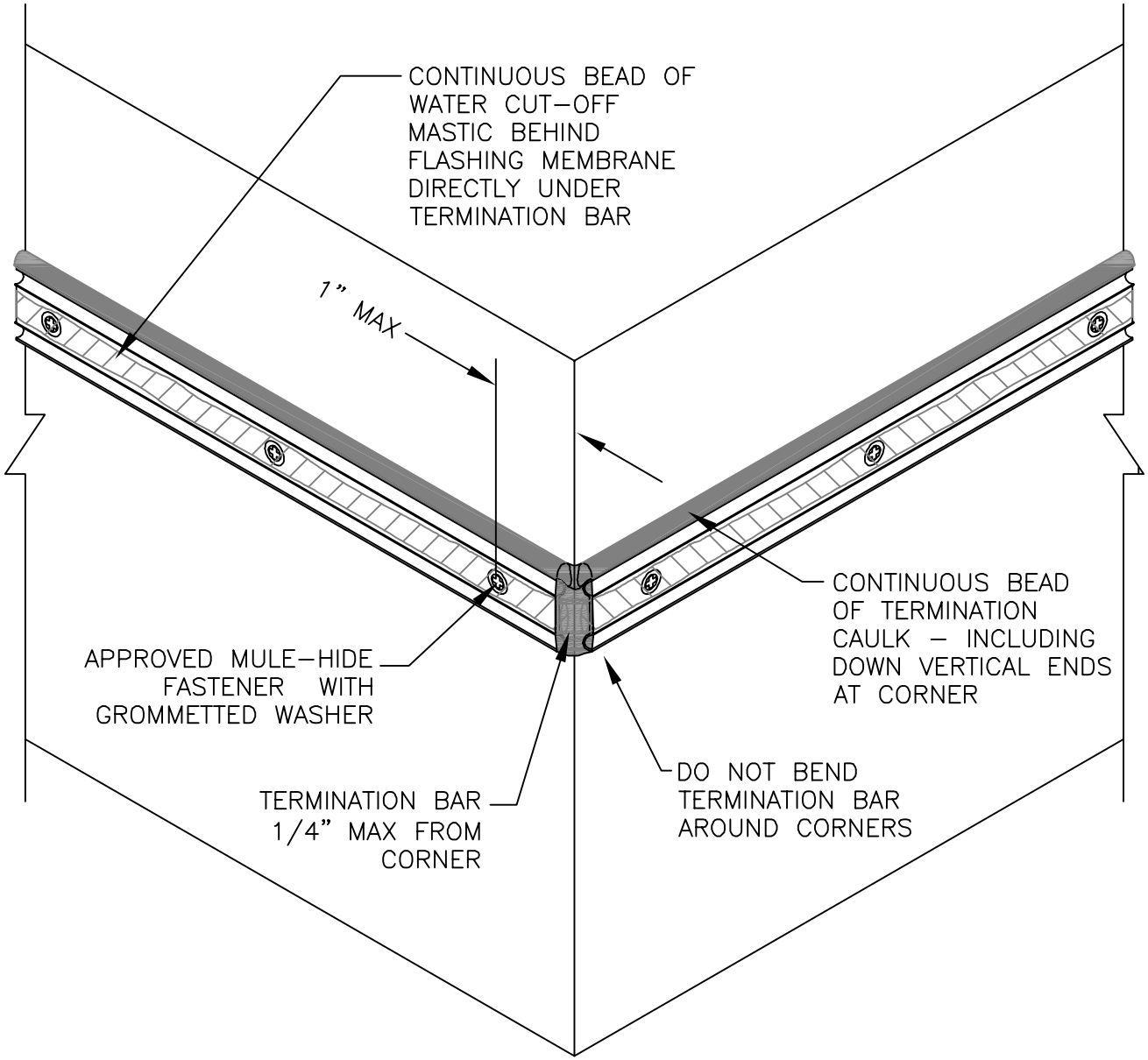

MULE-HIDE PRODUCTS CO., INC. **04/01/2007**	**TERMINATION BAR AT CORNER**	**DETAIL NO:**
	SYSTEMS:	**MHP-198**
	ALL PVC	

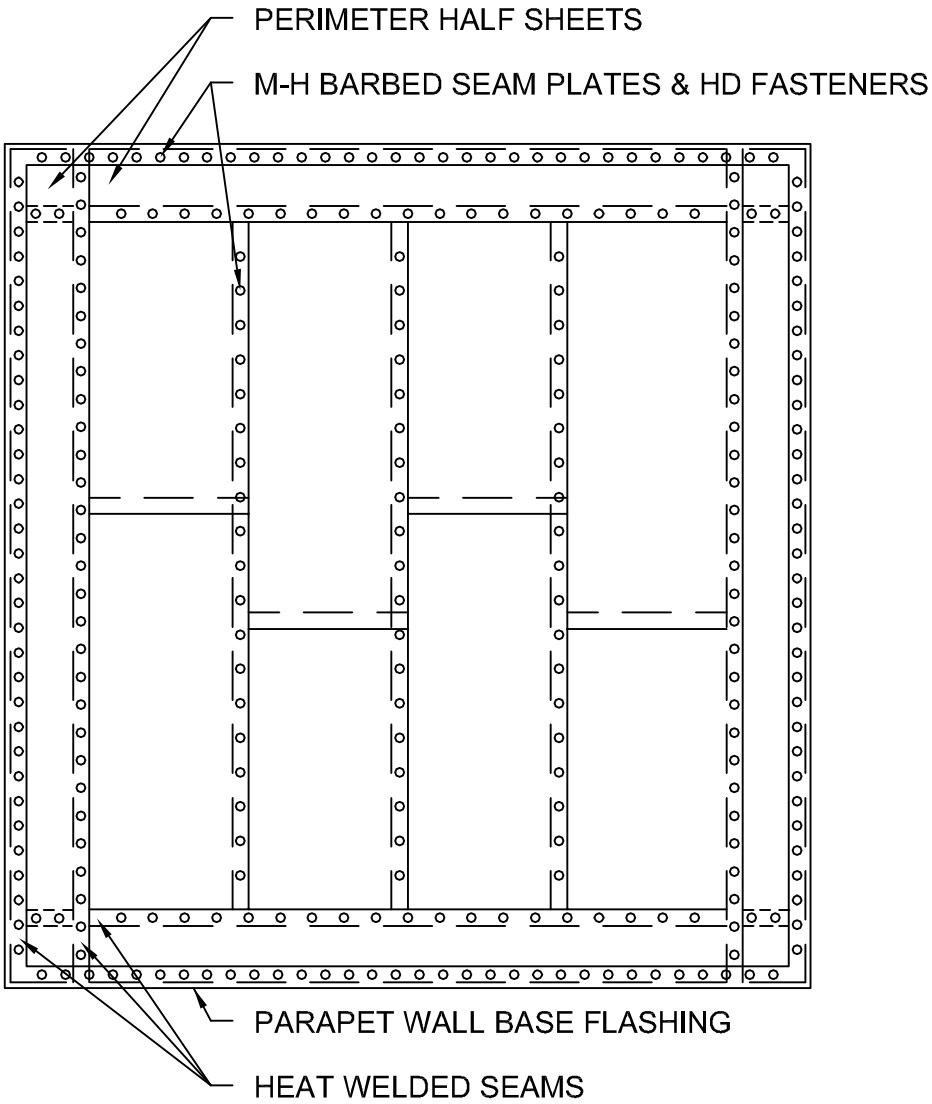

NOTE: SEE PVC 10 OR 15 YR WARRANTY DESIGN SUMMARY FOR APPROPRIATE FASTENER SPACING FOR VARIOUS DECK TYPES AND WIND UPLIFT REQUIRMENTS

MULE-HIDE PRODUCTS CO., INC. 2010	***FIELD MEMBRANE LAYOUT***	***DETAIL NO:***
	SYSTEMS:	***MHP-300***
	MECHANICALLY ATTACHED PVC	

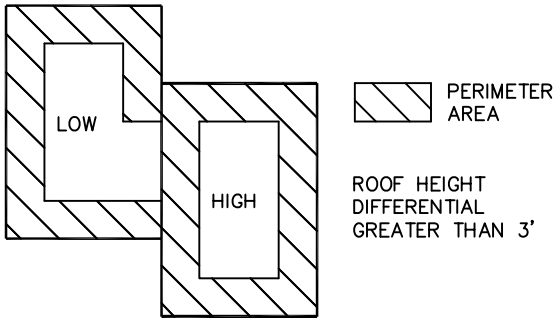

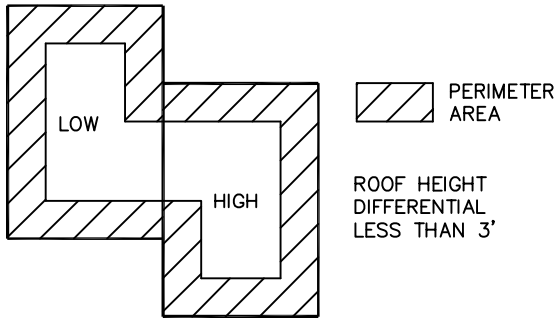

NOTES:

1. CONTACT MULE–HIDE FOR FM OR CODE COMPLIANCE FOR REQUIRED NUMBER OF PERIMETER SHEETS AND MEMBRANE FASTENING.

2. SECUREMENT NOT REQUIRED AT END ROLL SECTIONS; OVERLAP MEMBRANE 2" TO 3" (50 TO 75 mm). REFER TO DETAIL MHP–114.

3. FOR INSULATION SECUREMENT, REFER TO DETAIL MHP–200.

4. IF A FACTORY MUTUAL RATING IS REQUIRED, MEMBRANE FASTENING AT CORNERS MUST EXTEND TO ROOF EDGES IN BOTH DIRECTIONS.

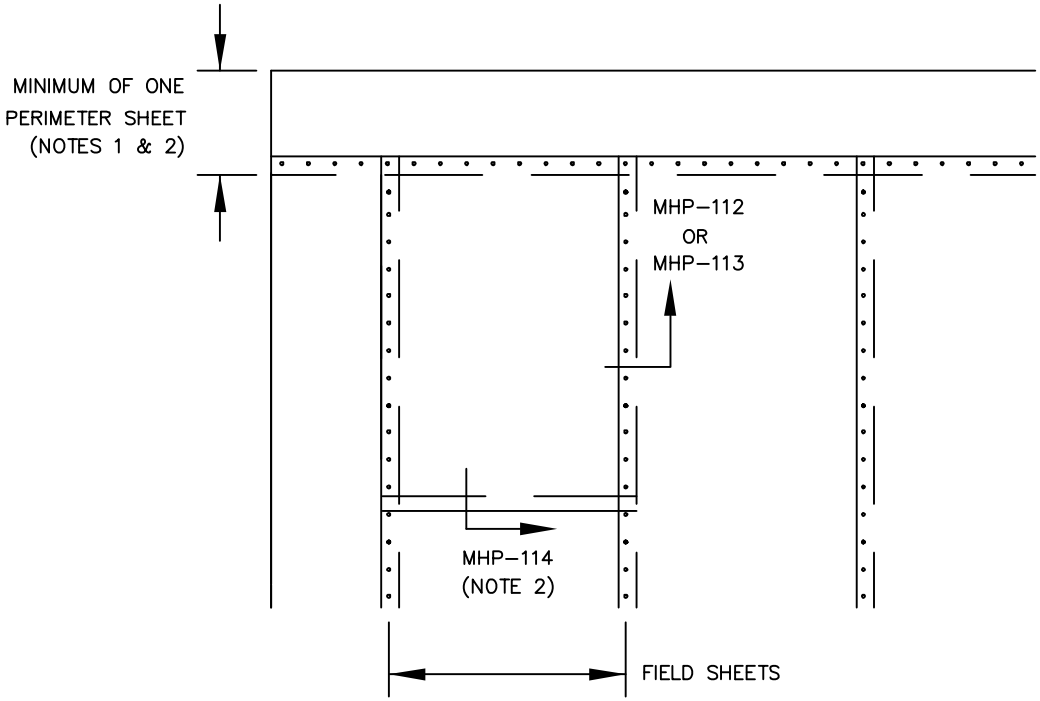

MULE-HIDE PRODUCTS CO., INC. 2010	***PERIMETER ATTACHMENT SYSTEMS:*** ***MECHANICALLY ATTACHED PVC***	***DETAIL NO:*** ***MHP-301***