SECTION 8

MULE-HIDE PVC
PRODUCT DATA SHEETS (PDS)

TABLE OF CONTENTS

Membrane **Name**
Mule-Hide PVC Membrane (0.050", 0.060", 0.080") ..... PDS 09-1205

Adhesives and Sealants
Universal Single-Ply Sealant ..... PDS 09-2105
Mule-Hide EPDM Water Cut-Off..... PDS 09-2110
Mule-Hide Thermoplastic One-Part Pourable Sealer ..... PDS 09-2205
Mule-Hide Low VOC PVC Bonding Adhesive ..... PDS 09-2410
Mule-Hide WBBA-2000 Bonding Adhesive ..... PDS 09-2505

Seaming
Mule-Hide PVC Membrane Cleaner ..... PDS 09-3110
Mule-Hide PVC Cut Edge Sealant..... PDS 09-3410

Flashings
Mule-Hide PVC Non-Reinforced Flashing ..... PDS 09-4120
Mule-Hide PVC Molded Sealant Pockets ..... PDS 09-4210
Mule-Hide PVC Pipe Seals..... PDS 09-4310
Mule-Hide PVC T-Joint Cover ..... PDS 09-4510
Mule-Hide PVC Universal Corners ..... PDS 09-4550

Fasteners
Mule-Hide 2.4" Barbed Seam Plates ..... PDS 09-5110
Mule-Hide 3" Metal Stress Plates ..... PDS 09-5115
Mule-Hide Drill Point Fasteners ..... PDS 09-5220
Mule-Hide HD-14 Heavy Duty Fasteners ..... PDS 09-5225
Mule-Hide HD-15 Heavy Duty Fasteners ..... PDS 09-5230

Accessories
Mule-Hide All Purpose Bar ..... PDS 09-6105
Mule-Hide Poly ISO 1 Roof Insulation ..... PDS 09-6210
Mule-Hide Poly ISO 2™ Roof Insulation ..... PDS 09-6215
Mule-Hide Poly ISO 1-HD Cover Board ..... PDS 09-6220
Georgia Pacific Dens Deck Prime ..... PDS 09-6290
USG Securock Gypsum-Fiber Roof Board..... PDS 09-6292
Mule-Hide PVC Coated Metal ..... PDS 09-6325
Mule-Hide PVC Walkway Pads ..... PDS 09-6410
HP Protection Mat..... PDS 09-6505

Please consult the Mule-Hide website for the most current information at www.mulehide.com

Mule-Hide Products Co., Inc.
1195 Prince Hall Dr.
Beloit, WI 53511

PRODUCT DATA SHEET
PDS 09-1205
Revision Date: Feb-2014

MULE-HIDE PVC MEMBRANE

PRODUCT DESCRIPTION

Mule-Hide PVC Membrane is an advanced formula, heat-weldable PVC thermoplastic membrane designed for long term weatherability and performance. The physical properties of the membrane are enhanced by a tenacious, weft-inserted polyester fabric. Meets or exceeds all requirements of ASTM 4434, Type III.

BASIC USES

Mule-Hide PVC membrane is used in mechanically attached and fully adhered roofing systems in new construction, reroofing and recover (retrofit) applications. It may also be used as flexible membrane flashings for walls, curbs, etc, when installing PVC membrane roofing systems. The system must be installed over acceptable roof insulation or other suitable substrate. See the Mule-Hide PVC Specifications Manual for complete specifications and details.

TYPICAL PHYSICAL PROPERTIES

Physical Property*	ASTM D4434 Requirement	50-mil	60-mil	80-mil
Tolerance on nominal thickness, % ASTM D751	±10 %	±10 %	±10 %	±10 %
Weight, lbs/ft^2 (kg/m^2)	----	0.33 (1.61)	0.40 (1.95)	0.55 (2.68)
Breaking Strength (MD x CD), lbf/in (kN/m) ASTM D751 grab method	200 min (35)	320 x 300	330 X 300	360 x 330
Elongation break of reinforcement (MD x CD) % ASTM D751 grab method	15 min	30 x 30	30 x 30	30 x 30
Thickness over scrim, in. (mm) ASTM D4434 optical method, ave of 3	0.016 min (0.40)	0.017 typ (0.432)	0.025 typ (0.635)	0.030 typ (0.762)
Seam Strength, min. ASTM D751 grab method (% of breaking strength)	>75	PASS	PASS	PASS
Tearing Strength (MD x CD), lbf (N) ASTM D751 proc. B, 8” x 8”	45 (200)	50 x 70	50 x 70	50 x 70
Low Temperature Bend, no cracks @5x ASTM D2136	PASS	Pass -40ºF (-40ºC)	- Pass -40ºF (-40ºC)	Pass -40ºF (-40ºC)
Linear Dimensional Change % ASTM D1204, 6 hours @ 176° F (80° C)	±0.5 max	0.4 typ	0.4 typ	0.4 typ
Water absorption resistance, mass % ASTM D570 166 hrs @ 158° F (70° C)	±3.0 max	2.0 typ	2.0 typ	2.0 typ
Water Vapor Permeance, Perms ASTM E96 proc. B	No Requirement	0.10 max 0.05 typ	0.10 max 0.05 typ	0.10 max 0.05 typ
Puncture resistance Federal lbf (kN) FTM 101C, method 2031 Dynamic, J (ft-lb) ASTM D5635 Static, lbf (N) ASTM D5602	 No Requirement 20 (14.7) 33 (145)	 280 typ PASS PASS	 320 typ PASS PASS	 380 typ PASS PASS
Properties after heat aging ASTM D3045, 56 days @ 176ºF Breaking strength % retained Elongation rein., % retained	 90 min 90 min	 90 min 90 min	 90 min 90 min	 90 min 90 min
Ozone Resistance, no cracks @ 7x ASTM D1149, 100 pphm, 168 hrs	PASS	PASS	PASS	PASS
Xenon-Arc Resistance, no cracks or crazing @ 10x, ASTM G155, 0.35 W/m^2 at 340 nm, 63ºC B.P.T, 12,600 kJ/m^2) total radiant exposure 10,000 hrs	PASS	PASS	PASS	PASS

MULE-HIDE PVC MEMBRANE

TYPICAL PHYSICAL PROPERTIES (Continued)

*Typical properties and characteristics are based on samples tested and are not guaranteed for all samples of this product. This data and information is intended as a guide and does not reflect the specification or specification range for any particular property of this product.

BENEFITS & SUPPLEMENTAL STATEMENTS

- Heat weldable – Seams are stronger than the membrane
- Durable – scrim reinforcement offer superior resistance to impact, wind uplift
- UV, ozone and oxidation resistance
- Energy efficiency – white color reflects sunlight
- Enhanced chemical resistance
- Low temperature flexibility

CODE APPROVALS/COMPLIANCE

A variety of Factory Mutual Ratings and Underwriters Laboratories Classifications are available. Contact Mule-Hide Technical Department for additional information.

INSTALLATION INSTRUCTIONS

1) Approved insulation shall be attached to the roof deck with an approved insulation adhesive or approved fasteners and plates. Install insulation with its largest dimension perpendicular to the direction of the membrane seams where possible.
2) Mechanically Attached Roofing System
   a) Perimeter sheets to be installed in an approved pattern along all exterior roof edges.
   b) Mechanical fasteners and plates are installed in the seams of both the perimeter sheets and field sheets and into the roof deck. Use approved fasteners and maintain proper penetration for specific roof deck.
3) Fully Adhered Roofing System
   a) Perimeter sheets are not required.
   b) The membrane is required to be mechanically attached at the base of all vertical surfaces, roof edges, and angle changes.
   c) The field of the roof is fully adhered to the substrate with Mule-Hide PVC Bonding Adhesive.
4) All seams are hot air welded and checked by probing.
5) All details will be done in accordance with Mule-Hide details.
6) On projects where a Mule-Hide Standard or Premium Warranty is requested, an authorized Mule-Hide representative shall inspect all completed work. This is only a brief summary and not the complete specification. The Mule-Hide Specifications, Details, Technical Bulletins, and associated documents should be thoroughly reviewed prior to starting any project. Contact Mule-Hide Products for additional information.

PRECAUTIONS

- Surfaces may be slippery when wet, or due to frost and ice build-up. Exercise caution to prevent falls.
- Mule-Hide PVC membranes are highly reflective to sunlight. Workers should dress appropriately, wear sunscreen, and wear sunglasses that filter out UV light.
- Exercise care when working near roof edge. Roof edges may not be visible when surrounding area is covered with snow.
- Store Mule-Hide membrane in original wrappings in a cool, shaded area. Cover with light-colored, breathable, waterproof tarpaulins. Mule-Hide membrane that has been exposed to the elements for approximately 7 days or longer must be prepared with Weathered Membrane Cleaner prior to hot air welding.

MULE-HIDE PVC MEMBRANE

PROTECTION & SAFETY

Mule-Hide maintains Material Safety Data Sheets on all of its products. Material Safety Data Sheets contain health and safety information for your development of appropriate product handling procedures to protect your employees and customers. Mule-Hide's Material Safety Data Sheets should be read and understood by all of your supervisory personnel and employees before using Mule-Hide products in your facilities.

SUPPLEMENTAL APPROVALS, STATEMENTS AND CHARACTERISTICS

1. Mule-Hide PVC membranes meet or exceeds ASTM D 4434 requirements Poly Vinyl Chloride Sheet Roofing. Mule-Hide PVC membrane is classified as Type III as defined by ASTM D 4434.
2. Mule-Hide reinforced PVC membrane was tested for static puncture resistance as per ASTM D5602 and exceeded 33 lbf (145 N) which passes the ASTM D4434 requirement.
3. Mule-Hide reinforced PVC was tested for dynamic puncture resistance per ASTM D5635 using the most recently modified impact head. Our 50-mil membrane was watertight after an impact energy of 22.5 J (16.6 ft-lbf) which passes the ASTM D4434 requirement.
4. Radiative Properties for Energy Star®, Cool Roof Rating Council (CRRC) and LEED™

DESCRIPTION	TEST METHOD	WHITE PVC	TAN PVC	GRAY PVC
ENERGY STAR® initial solar reflectance	Solar Spectrum Reflectometer	0.87	pending	pending
ENERGY STAR® solar reflectance - 3 yrs	Solar Spectrum Reflectometer (uncleaned)	0.61	pending	pending
ENERGY STAR® initial emissivity	ASTM E408	0.95	pending	pending
CRRC initial solar reflectance	ASTM C1549	0.87	0.45	0.39
CRRC solar reflectance after 3 years	ASTM C1549 (uncleaned)	0.61	pending	pending
CRRC initial thermal emittance	ASTMC1371	0.95	0.86	.087
CRRC thermal emittance after 3 years	ASTM C1371 (uncleaned)	0.86	pending	pending
CRRC SRI (Solar Reflectance Index)	ASTM E1980	111	49	pending
CRRC SRI (Solar Reflectance Index - 3 yrs)	ASTM E1980	72	pending	pending
CRRC Product ID	N/A	0670-0015		
LEED™ thermal emittance	ASTM E408	0.94	pending	pending

Mule-Hide White PVC membranes are LEED compliant. Mule Hide White PVC is also an ENERGY STAR® and California Title 24 rated roof product.

An ENERGY STAR qualified low slop roof product must have an initial solar reflectance of at least 0.65 and a 3-year aged solar reflectance of at least 0.50. Cleaning the aged roof surface is not permitted by the ENERGY STAR test protocol. Energy Star is only valid in the United States for Roofing Products.

The Cool Roof Rating Council (CRRC) does not specify minimums for reflectance or emittance but they do require specific protocols for testing and reporting. Cleaning of the aged roof surface is not permitted for determination of radiative properties after 3 years.

A LEED “point” may be earned if a roof material is ENERGY STAR qualified and has a thermal emittance of at least 0.90 as determined by ASTM E408.

MULE-HIDE PVC MEMBRANE

Solar Reflectance Index (SRI) is calculated per ASTM E 1980. The SRI is a measure of the roof's ability to reject solar heat, as shown by a small temperature rise. It is defined so that a standard black (reflectance 0.05, emittance 0.90) is 0 and a standard white (reflectance 0.80, emittance 0.90) is 100. Materials with the highest SRI values are the coolest choices for roofing. Due to the way SRI is defined, particularly hot materials can even take slightly negative values, and particularly cool materials can even exceed 100.

California Title 24 requires an initial minimum reflectance of 0.70 and emittance of 0.75 as determined by CRRC.

ADDITIONAL INFORMATION

The information given on this PDS is subject to change without notice. Always check the Mule-Hide website at www.mulehide.com for the latest information, changes and updates or contact Mule-Hide Products Company at 800-786-1492.

DISCLAIMER

The statements provided concerning the material shown are intended as a guide for material usage and are believed to be true and accurate at the time of printing. No statement made by anyone may supersede this information, except when done in writing by Mule-Hide Products Co., Inc. Since the manner of use is beyond our control, Mule-Hide does not authorize anyone to make any warranty of merchantability or fitness for any particular purpose or any other warranty, guarantee or representation, expressed or implied, concerning this material. This product may be eligible for a Mule-Hide warranty, please check the Mule-Hide website at www.mulehide.com or contact Mule-Hide directly at 800-786-1492 for details. Buyer and user accept the product under these conditions and assume the risk of any failure, any injury person or property (including that of the user), loss or liability resulting from the handling, storage or use of the product whether or not it is handled, stored or used in accordance with the directions or specifications. Mule-Hide must be notified in writing of any claims and be given the opportunity to inspect the alleged failure before repairs are made.

Mule-Hide Products Co., Inc.
1195 Prince Hall Dr.
Beloit, WI 53511

UNIVERSAL SINGLE-PLY SEALANT

PRODUCT DESCRIPTION

A 100% solids, solvent free, one-part, polyether sealant that provides a weather tight seal to a variety of building substrates. Provides excellent adhesive to substrates such as stone, masonry, ceramic, marble, wood, steel, aluminum, most plastics and composites. Not recommended as a glass-glazing sealant.

BASIC USES

Universal Single-Ply Sealant can be used as a:

- Lap-sealant for White-on-Black EPDM roofing systems
- Sealant for All-Purpose Bar on EPDM, TPO, and PVC systems
- Sealant for counter flashings, copings, and scupper details

TYPICAL PHYSICAL PROPERTIES

Typical Properties and Characteristics	
Viscosity	850,000 Cps
Tack Free Time	35 minutes depending upon temperature
Cure Time	3-7 days depending upon temperature
Flow, Sag or Sump	None (1/4" bead)
Staining	None
Ozone Resistance	Good
UV Resistance	Excellent
Cured Hardness (Shore A)	17 - 23
Shear Strength	150 PSI
Color	White
Typical properties and characteristics are based on samples tested and are not guaranteed for all samples of this product. This data and information is intended as a guide and does not reflect the specification or specification range for any particular property of this product.	

PACKAGING

Packaging	
Weight per Carton	26 lbs
Packaging	24 tubes, 10.1 fluid oz. each (per carton)
Shelf Life	12 months (unopened tube @ 90° F

BENEFITS & SUPPLEMENTAL STATEMENTS

Excellent adhesion to various substrates
VOC free
Versatile applications

COVERAGE RATES

25 feet (7.6 m) per tube or 600 feet (183 m) using a 0.250 " (6 mm) bead

INSTALLATION TEMPERATURE

Do not install in temperatures below 40° F

UNIVERSAL SINGLE-PLY SEALANT

INSTALLATION INSTRUCTIONS

1. Universal Single-Ply Sealant is a one-component, ready-to-use material that requires no mixing or preparation.
2. Surface Preparation - Surfaces shall be dry, clean and free of all dust, or contamination, which may harmfully affect the adhesion of the sealant. Cleaning with Weathered Membrane Cleaner may be required.
3. A quality caulking gun should be used to ensure ease of application.
4. Universal Single-Ply Sealant typically is tack free in 25 minutes and skins over within 45 minutes. Full cure occurs in 3 to 7 days depending on temperature and humidity.
5. Clean Up - Remove excess sealant adjacent to joint prior to curing with our Weathered Membrane Cleaner. Uncured sealant can also be removed from tools or equipment with our Weathered Membrane Cleaner.

PRECAUTIONS

1. Avoid prolonged contact with skin. Uncured adhesive irritates eyes. In case of contact with eyes, immediately flush with water. Consult a physician if ill effects occur.
2. Store in original unopened containers in a cool, dry area. Protect unopened containers from heat and direct sunlight. Elevated temperatures will reduce shelf life.
3. KEEP OUT OF THE REACH OF CHILDREN.
4. For industrial professional use only. May not be repackaged or resold for other than industrial or professional use.
5. See Material Safety Data Sheet for complete safety information before using product.
6. Do not use Universal Single-Ply Sealant in temperatures below 40 degrees F.

PROTECTION & SAFETY

Mule-Hide maintains Material Safety Data Sheets on all of its products. Material Safety Data Sheets contain health and safety information for your development of appropriate product handling procedures to protect your employees and customers. Mule-Hide's Material Safety Data Sheets should be read and understood by all of your supervisory personnel and employees before using Mule-Hide products in your facilities.

ADDITIONAL INFORMATION

The information given on this PDS is subject to change without notice. Always check the Mule-Hide website at www.mulehide.com for the latest information, changes and updates or contact Mule-Hide Products Company at 800-786-1492.

DISCLAIMER

The statements provided concerning the material shown are intended as a guide for material usage and are believed to be true and accurate at the time of printing. No statement made by anyone may supersede this information, except when done in writing by Mule-Hide Products Co., Inc. Since the manner of use is beyond our control, Mule-Hide does not authorize anyone to make any warranty of merchantability or fitness for any particular purpose or any other warranty, guarantee or representation, expressed or implied, concerning this material. This product may be eligible for a Mule-Hide warranty, please check the Mule-Hide website at www.mulehide.com or contact Mule-Hide directly at 800-786-1492 for details. Buyer and user accept the product under these conditions and assume the risk of any failure, any injury person or property (including that of the user), loss or liability resulting from the handling, storage or use of the product whether or not it is handled, stored or used in accordance with the directions or specifications. Mule-Hide must be notified in writing of any claims and be given the opportunity to inspect the alleged failure before repairs are made.

Mule-Hide Products Co., Inc.
1195 Prince Hall Dr.
Beloit, WI 53511

PRODUCT DATA SHEET
PDS 09-2110
Revision Date: Jan-2014

MULE-HIDE WATER CUT-OFF

PRODUCT DESCRIPTION

Mule-Hide Water Cut-Off is a one-part, low viscosity, self-wetting, butyl-blend mastic designed for sealing Mule-Hide membranes to wood, concrete, metal, plastic and other substrates. This product is an extremely tacky material and will remain so when used with a compression –type seal.

BASIC USES

Mule-Hide Water Cut-Off can be used to seal roofing membranes to stop water penetration into the roofing system. Common uses are at drain terminations and behind Mule-Hide's All Purpose Bars at wall terminations

TYPICAL PHYSICAL PROPERTIES

Typical Properties and Characteristics	
Color	Gray
Solids	80%
Flash Point	40ºF (4ºC) Closed Cup
Service Temperature	-40ºF to 200ºF (-40ºC to 93ºC)
Specific Gravity	1.29
Cold Weather Flexibility	Good
Average Brookfield Viscosity	1,320,000 cps
Typical properties and characteristics are based on samples tested and are not guaranteed for all samples of this product. This data and information is intended as a guide and does not reflect the specification or specification range for any particular property of this product.	

LEED Information	
Pre-consumer Recycled Content	0%
Post-consumer Recycled Content	0%
Manufacturing Location	Carlisle, PA
VOC Content	250 g/L

Packaging
Weight Per Carton – 28 lbs
Packaging – 25 tubes / carton
Shelf Life (un-opened tube) – 1 year

BENEFITS & SUPPLEMENTAL STATEMENTS

Excellent adhesion to various substrates
Provides a durable compression type seal
Versatile applications

COVERAGE RATES

Approximately 10 lineal feet per using a ½" diameter bead

INSTALLATION INSTRUCTIONS

1. Mule-Hide Water Cut-Off is a one-component, ready-to-use material that requires no mixing or preparation.
2. Surface Preparation - Surfaces shall be dry, clean and free of all dust, or contamination, which may harmfully affect the adhesion of the sealant. Cleaning with Weathered Membrane Cleaner may be required.
3. A quality caulking gun should be used to ensure ease of application.
4. Apply a ½" diameter bead of Mule-Hide Water Cut-Off between the substrate and the edge of the membrane. The membrane must cover the mastic.
4. Install appropriate termination detail and secure to provide constant compression for the Mule-Hide Water Cut-Off. Follow Mule-Hide's Specification Manual and Details for appropriate methods of termination.

MULE-HIDE WATER CUT-OFF

CLEAN UP

1. Clean Up - Remove excess Water Cut-Off with our Weathered Membrane Cleaner. Water Cut-Off can also be removed from tools or equipment with our Weathered Membrane Cleaner.

PRECAUTIONS

1. See Material Safety Data Sheet for complete safety information before using product.
2. Water Cut-Off is FLAMMABLE – contains solvents that area dangerous fire and explosion hazards when exposed to heat, flame or sparks. Store and use away from all sources of heat, flame or sparks. Do not smoke while applying. Do not use in a confined or unventilated area. Vapors are heavier than air and may travel along ground to a distant ignition source and flash back
3. Avoid breathing vapors. Keep container closed when not in use. Use with adequate ventilation. If inhaled, remove to fresh air. If not breathing, perform artificial respiration. If breathing is difficult, give oxygen. Call a physician immediately.
4. If swallowed, DO NOT INDUCE VOMITING. Call a physician immediately.
5. Avoid contact with eyes. Safety glasses or goggles are recommended. If splashed in eyes, immediately flush eyes with plenty of clean water for at least 15 minutes. Contact a physician immediately.
6. Avoid contact with skin. Wash hands thoroughly after handling. In case of contact with skin, thoroughly wash affected area with soap and water.

   Note: Permeation-resistant gloves (that meet ANSI/ISEA 105-2005) are recommended to be worn when using this product to protect hands from irritating ingredients.

PROTECTION & SAFETY

Mule-Hide maintains Material Safety Data Sheets on all of its products. Material Safety Data Sheets contain health and safety information for your development of appropriate product handling procedures to protect your employees and customers. Mule-Hide's Material Safety Data Sheets should be read and understood by all of your supervisory personnel and employees before using Mule-Hide products in your facilities.

ADDITIONAL INFORMATION

The information given on this PDS is subject to change without notice. Always check the Mule-Hide website at www.mulehide.com for the latest information, changes and updates or contact Mule-Hide Products Company at 800-786-1492.

DISCLAIMER

The statements provided concerning the material shown are intended as a guide for material usage and are believed to be true and accurate at the time of printing. No statement made by anyone may supersede this information, except when done in writing by Mule-Hide Products Co., Inc. Since the manner of use is beyond our control, Mule-Hide does not authorize anyone to make any warranty of merchantability or fitness for any particular purpose or any other warranty, guarantee or representation, expressed or implied, concerning this material. This product may be eligible for a Mule-Hide warranty, please check the Mule-Hide website at www.mulehide.com or contact Mule-Hide directly at 800-786-1492 for details. Buyer and user accept the product under these conditions and assume the risk of any failure, any injury person or property (including that of the user), loss or liability resulting from the handling, storage or use of the product whether or not it is handled, stored or used in accordance with the directions or specifications. Mule-Hide must be notified in writing of any claims and be given the opportunity to inspect the alleged failure before repairs are made.

Mule-Hide Products Co., Inc.
1195 Prince Hall Dr.
Beloit, WI 53511

MULE-HIDE THERMOPLASTIC ONE-PART POURABLE SEALER

PRODUCT DESCRIPTION

Thermoplastic One-Part Pourable Sealer is a one-part, moisture curing, elastomeric polyether sealant providing rapid skin time when exposed to atmospheric moisture forming a waterproof rubber surface in less than an hour. Moisture curing continues for fourteen to twenty-eight days, until a two-inch deep solid rubber seal encases the penetration. Complete cure time will vary depending on relative humidity and temperature. Mule-Hide's Tape Primer must be applied to all surfaces that will be in contact with the Thermoplastic One-Part Pourable Sealer. Primer is not used with the PVC Molded Sealant Pocket. Unused sealant remaining in the pouch will remain useable up to 30 days if pouch is resealed with original cap.

BASIC USES

This product is designed for use with our TPO, PVC & EPDM Sealant Pockets. The sealant's one-part, pourable consistency allows for quick pocket filling without mixing

SPECIFICATIONS

Typical Values*	
Color	White
Odor	Mild ester smell (mint) when wet. Odorless when dry
Specific Gravity	1.40 (11.6 lbs/gallon) – 1.44 (12.0 lbs/gallon
Viscosity (Brookfield RTV), cps	Self leveling 20,000 – 50,000
Hardness (Shore A) ASTM C 0661	25 to 35
Tack Free Time ASTM C 0679	Less than 1 hour @ 70º F (21ºC)
Long term weatherability ASTM G 53	No crazing or cracking
Service Temperature ASTM 2453	Minus 40ºF to 200ºF. (Minus 40ºC to 93ºC)
Elongation @ Break, % ASTM D 412	450
Long Term Weatherability ASTM G 53 - 98 cycles @ 12 hours/cycle - Condensate exposure: 4 hrs @ 122°F (50°C) - U.V. exposure – 8 hrs@ 158°F (70°C)	No Cracking or crazing
*Typical properties and characteristics are based on samples tested and are not guaranteed for all samples of this product. This data and information is intended as a guide and does not reflect the specification or specification range for any particular property of this product.	

PACKAGING

Each carton contains: 4 – 0.5 Gallon pouches per bucket (4-2 liter)
Weight Per Carton: 26 lbs/bucket (11.8 kg)

BENEFITS & SUPPLEMENTAL STATEMENTS

- No mixing required – ready to use
- Resealable pouch using original cap
- Provides a flexible and long-lasting seal around hard to flash projections
- Provides a watertight seal in less than an hour after application

MULE-HIDE THERMOPLASTIC ONE-PART POURABLE SEALER

COVERAGE RATES

One 0.5-gallon pouch (2-liter) will fill 122 cubic inches of volume within a sealant pocket. As an example, one 6" TPO, PVC or EPDM Sealant Pocket will require 0.23 gallons (0.87 liters) to fill completely (with no penetrations). Coverage rates are average and may vary due to jobsite conditions.

INSTALLATION INSTRUCTIONS

Preparation

1. Surfaces must be free of moisture, dirt and any contaminants. Any previously applied asphalt, caulking or sealants must be removed from the penetration.
2. Fill any voids in the roof deck around the penetration(s) to prevent sealant from seeping through the roof. Pourable sealer must be a minimum of 2" (50 mm) deep. All penetrations must be a minimum of 1" (25 mm) from sides of the pitch pan or sealer pocket.

TPO Application

1. Clean all surfaces with TPO Weathered Membrane Cleaner.
2. Mule-Hide Tape Primer is required for prepping the interior surfaces of the pocket. After welding the pocket in place, apply Mule-Hide Tape Primer to all bonding surfaces, including penetration(s), TPO-c membrane, inside wall and rim of TPO Molded Sealant Pocket. Allow primer to dry.

PVC Application

1. Clean all surfaces with PVC Weathered Membrane Cleaner
2. DO NOT PRIME PVC membrane or pocket with Mule-Hide Tape Primer

EPDM Application

1. Clean all surfaces with PVC Weathered Membrane Cleaner
2. Mule-Hide Tape Primer is required for prepping the interior surfaces of the pocket. After welding the pocket in place, apply Mule-Hide Tape Primer to all bonding surfaces, including penetration(s), TPO-c membrane, inside wall and rim of TPO Molded Sealant Pocket. DO NOT apply primer to blue plastic strip that forms inside wall of pourable sealer pocket. Allow primer to dry.

All Applications

1. Remove cap from 0.5-gallon (2-liter) pouch and pour Thermoplastic One-Part Pourable Sealer directly into pocket. Fill pocket completely until rim is covered with Thermoplastic One-Part Pourable Sealer making sure all voids are filled.
2. Avoid breathing vapors. Keep container closed when not in use. Use with adequate ventilation. If inhaled, remove to fresh air. If not breathing, perform artificial respiration. If breathing is difficult, give oxygen. Call a physician immediately.
3. If swallowed, DO NOT INDUCE VOMITING! Call a physician immediately
4. Avoid contact with eyes. Safety glasses or goggles are recommended. If splashed in eyes, immediately flush eyes with water for at least 15 minutes. Contact a physician immediately.
5. Avoid contact with skin. Wash hand thoroughly after handling. In case of contact with skin, thoroughly wash affected area with soap and water.
6. Do not thin. Thinning will affect performance.
7. KEEP OUT OF REACH OF CHILDREN.

MULE-HIDE THERMOPLASTIC ONE-PART POURABLE SEALER

STORAGE & HANDLING

Shelf life is established at 12 months. Shelf life is based on storage in original, unopened or undamaged containers at temperatures ranging from 60oF to 80oF. Should the Pourable Sealer be exposed to lower temperatures, restore to room temperature prior to use.

PROTECTION & SAFETY

Mule-Hide maintains Material Safety Data Sheets on all of its products. Material Safety Data Sheets contain health and safety information for your development of appropriate product handling procedures to protect your employees and customers. Mule-Hide's Material Safety Data Sheets should be read and understood by all of your supervisory personnel and employees before using Mule-Hide products in your facilities.

ADDITIONAL INFORMATION

The information given on this PDS is subject to change without notice. Always check the Mule-Hide website at www.mulehide.com for the latest information, changes and updates or contact Mule-Hide Products Company at 800-786-1492.

DISCLAIMER

The statements provided concerning the material shown are intended as a guide for material usage and are believed to be true and accurate at the time of printing. No statement made by anyone may supersede this information, except when done in writing by Mule-Hide Products Co., Inc. Since the manner of use is beyond our control, Mule-Hide does not authorize anyone to make any warranty of merchantability or fitness for any particular purpose or any other warranty, guarantee or representation, expressed or implied, concerning this material. This product may be eligible for a Mule-Hide warranty, please check the Mule-Hide website at www.mulehide.com or contact Mule-Hide directly at 800-786-1492 for details. Buyer and user accept the product under these conditions and assume the risk of any failure, any injury person or property (including that of the user), loss or liability resulting from the handling, storage or use of the product whether or not it is handled, stored or used in accordance with the directions or specifications. Mule-Hide must be notified in writing of any claims and be given the opportunity to inspect the alleged failure before repairs are made.

Mule-Hide Products Co., Inc.
1195 Prince Hall Dr.
Beloit, WI 53511

PRODUCT DATA SHEET
PDS 09-2210
Revision Date: Jan-2014

MULE-HIDE POURABLE SEALER

PRODUCT DESCRIPTION

Mule-Hide Pourable Sealer is a two component, solvent free, polyurethane based product compatible with Mule-Hide's various EPDM systems. Mule-Hide Pourable Sealer was designed to provide a flexible, yet long lasting seal around hard to flash penetrations through the roof deck.

BASIC USES

Mule-Hide's Pourable Sealer is used primarily as a filler for sealing pitch pans. This product may also be used to provide a permanent tie-in between EPDM membranes and a built-up roof system and for attaching lightning rod bases and ground cable clips to the roofing membrane.

TYPICAL PHYSICAL PROPERTIES

Physical Property	Results
Color	Black
Solids Content	100%
Flash Point	Part A 490ºF (254ºC) Part B 220ºF (104ºC)
Average Tensile Strength	210 psi
Average Specific Gravity	1.23
Average Hardness (Shore A)	30
Average Elongation	280%
Low Temperature Brittleness	-50ºF (-46ºC)
VOC	Part A – Less than 15 grams / liter Part B – Less than 10 grams / liter
Packaging (per carton)	Part A – 2, 1-gallon cans Part B – 2, 1-pint cans
Pot Life	30 minutes @ 75ºF
Shelf Life	1year in un-opened container
Typical properties and characteristics are based on samples tested and are not guaranteed for all samples of this product. This data and information is intended as a guide and does not reflect the specification or specification range for any particular property of this product.	

BENEFITS & SUPPLEMENTAL STATEMENTS

- Quick curing time after mixing
- Provides a flexible, long-lasting seal around hard to flash projections

COVERAGE RATES

One gallon of Pourable Sealer contains 231 cubic inches for filling Pitch pans. Due to waste and crowning, 200 cubic inches should be used as a guideline to determine gallons required. One gallon of Pourable Sealer will cover approximately 19 linear feet of cold tie-in 6 inches wide on a smooth surface. Coverage will vary according to surface roughness and thickness of application.

Coverage rates are average and may vary due to jobsite conditions.

MULE-HIDE POURABLE SEALER

MIXING INSTRUCTIONS

Thoroughly mix the Part B (1 pint can) and pour contents into Part A (1 gallon can). Thoroughly stir components together using a variable speed drill and mixing blade for a minimum of 5 minutes. Be sure to scrape the sides of the can to ensure uniform mixing. Note: Part B (1 pint can) may be pressurized - open container slowly.

Note: When mixed, Pourable Sealer has a pot life of approximately 30 minutes.

Note: Part B (1-pint can) may be pressurized – open container slowly.

INSTALLATION INSTRUCTIONS

1. Pitch Pans
    a. Fit the EPDM membrane as tightly as possible around the penetrating object and seal as necessary to prevent loss of filler.
    b. Install and flash pitch pans in accordance with the appropriate details. Minimum Pourable Sealer depth required is 2 inches. Minimum distance from object to the side of the pans is 1 inch.
    c. Clean all mating surfaces with Weathered Membrane Cleaner and allow to dry. Prime all surfaces Tape Primer, including field membrane, penetration and un-cured flashing that will come in contact with the Pourable Sealer and allow primer to properly flash off. If using Pourable Sealer Pocket do not apply Tape Primer to blue strip that forms inside wall of the Pourable Sealer Pocket.
    d. Fill pan with properly mixed Pourable Sealer in sufficient quantity to crown the top surface to prevent ponding water.

A. B. Tie-in to Built-Up Roof Surfaces
    a. Scrape and clean the built-up surface to remove all gravel, dirt and moisture in the tie-in area to ensure the surface is smooth, clean and dry.
    b. Properly mix the Pourable Sealer as specified and embed the Uncured EPDM Flashing as indicated in the detail section of the Mule-Hide Manual.

PRECAUTIONS

1. See Material Safety Data Sheet for complete safety information before using product.
2. Avoid breathing vapors. Keep container closed when not in use. Use with adequate ventilation. If inhaled, remove to fresh air. If not breathing, perform artificial respiration. If breathing is difficult, give oxygen. Call a physician immediately.
3. If swallowed, DO NOT INDUCE VOMITING. Call a physician immediately.
4. Avoid contact with eyes. Safety glasses or goggles are recommended. If splashed in eyes, immediately flush eyes with plenty of clean water for at least 15 minutes. Contact a physician immediately.
5. Do not thin Pourable Sealer as thinning will affect performance.
6. Avoid contact with skin. Wash hands thoroughly after handling. In case of contact with skin, thoroughly wash affected area with soap and water.

   Note: Permeation-resistant gloves (that meet ANSI/ISEA 105-2005) are recommended to be worn when using this product to protect hands from irritating ingredients.
7. Shelf life is based on storage in original, unopened and undamaged containers at temperatures ranging from 60ºF to 80ºF (15ºC to 26ºC). Should Pourable Sealer be exposed to lower temperatures, restore to room temperature prior to use.
8. Avoid contact of Pourable Sealer to surfaces other than rubber membranes as staining will occur.
9. KEEP OUT OF REACH OF CHILDREN.

MULE-HIDE POURABLE SEALER

PROTECTION & SAFETY

Mule-Hide maintains Material Safety Data Sheets on all of its products. Material Safety Data Sheets contain health and safety information for your development of appropriate product handling procedures to protect your employees and customers. Mule-Hide's Material Safety Data Sheets should be read and understood by all of your supervisory personnel and employees before using Mule-Hide products in your facilities.

ADDITIONAL INFORMATION

The information given on this PDS is subject to change without notice. Always check the Mule-Hide website at www.mulehide.com for the latest information, changes and updates or contact Mule-Hide Products Company at 800-786-1492.

DISCLAIMER

The statements provided concerning the material shown are intended as a guide for material usage and are believed to be true and accurate at the time of printing. No statement made by anyone may supersede this information, except when done in writing by Mule-Hide Products Co., Inc. Since the manner of use is beyond our control, Mule-Hide does not authorize anyone to make any warranty of merchantability or fitness for any particular purpose or any other warranty, guarantee or representation, expressed or implied, concerning this material. This product may be eligible for a Mule-Hide warranty, please check the Mule-Hide website at www.mulehide.com or contact Mule-Hide directly at 800-786-1492 for details. Buyer and user accept the product under these conditions and assume the risk of any failure, any injury person or property (including that of the user), loss or liability resulting from the handling, storage or use of the product whether or not it is handled, stored or used in accordance with the directions or specifications. Mule-Hide must be notified in writing of any claims and be given the opportunity to inspect the alleged failure before repairs are made.

Mule-Hide Products Co., Inc.
1195 Prince Hall Dr.
Beloit, WI 53511

PRODUCT DATA SHEET
PDS 09-2220
Revision Date: Jan 2014

BLACK ONE-PART POURABLE SEALER

PRODUCT DESCRIPTION

Black One-Part Pourable Sealer is a one-part, moisture curing, elastomeric polyether sealant providing rapid skin time when exposed to atmospheric moisture forming a waterproof rubber surface in less than an hour. Moisture curing continues for fourteen to twenty-eight days, until a two-inch deep solid rubber seal encases the penetration. Complete cure time will vary depending on relative humidity and temperature. Mule-Hide's Tape Primer must be applied to all surfaces that will be in contact with the Black One-Part Pourable Sealer. Unused sealant remaining in the pouch will remain useable up to 30 days if pouch is resealed with original cap.

BASIC USES

This product is designed for use with our EPDM Sealant Pockets. The sealant's one-part, pourable consistency allows for quick pocket filling without mixing

SPECIFICATIONS

Typical Values*	
Color	Black
Odor	Mild ester smell (mint) when wet. Odorless when dry.
Specific Gravity	1.4 (11.6 lbs/gallon) – 1.5 (12.5 lbs/gallon)
Viscosity (Brookfield RTV), cps	Self leveling 20,000 – 50,000
Hardness (Shore A) ASTM C 0661	25 - 35
Tack Free Time ASTM C 0679	Less than 1 hour @ 70 degrees F. (21 degrees C)
Low temperature flex – PASS	Minus 20 degrees F
Service Temperature ASTM 2453	Minus 40 degrees F to 200 degrees F. (Minus 40 degrees C to 93 degrees C)
Shrinkage (14 day cure)	No measurable shrinkage
Elongation @ Break, % ASTM D 412	450
Long Term Weatherability ASTM G 53 - 98 cycles @ 12 hours/cycle - Condensate exposure: 4 hrs @ 122°F (50°C) - U.V. exposure – 8 hrs@ 158°F (70°C)	No Cracking or crazing
*Typical properties and characteristics are based on samples tested and are not guaranteed for all samples of this product. This data and information is intended as a guide and does not reflect the specification or specification range for any particular property of this product.	

PACKAGING

Each carton contains: 4 – 0.5 Gallon pouches per bucket (4-2 liter)
Weight Per Carton: 29 lbs/bucket (13.15 kg)

BENEFITS & SUPPLEMENTAL STATEMENTS

- No mixing required – ready to use
- Resealable pouch using original cap
- Provides a flexible and long-lasting seal around hard to flash projections
- Provides a watertight seal in less than one hour after application

BLACK ONE-PART POURABLE SEALER

COVERAGE RATES

One 0.5-gallon pouch (2-liter) will fill 122 cubic inches of volume within a sealant pocket. As an example, one 6" EPDM Sealant Pocket will require 0.23 gallons (0.87 liters) to fill completely (with no penetrations). Coverage rates are average and may vary due to job site conditions.

INSTALLATION INSTRUCTIONS*

Preparation

1. Surfaces must be free of moisture, dirt and any contaminants. Any previously applied asphalt, caulking or sealants must be removed from the penetration.
2. Fill any voids in the roof deck around the penetration(s) to prevent sealant from seeping through the roof. Pourable sealer must be a minimum of 2" (50 mm) deep. All penetrations must be a minimum of 1" (25 mm) from the sides of the pitch pan or sealer pocket.
3. Clean all surfaces with Weathered Membrane Cleaner.
4. Mule-Hide Tape Primer is required for prepping the interior surfaces of the pocket. After welding the pocket in place, apply Mule-Hide Tape Primer to all bonding surfaces, including penetration(s), TPO-c membrane, inside wall and rim of TPO Molded Sealant Pocket. DO NOT apply primer to blue plastic strip that forms inside wall of pourable sealer pocket. Allow primer to dry.
5. Remove cap from 0.5-gallon (2-liter) pouch and pour Thermoplastic One-Part Pourable Sealer directly into pocket. Fill pocket completely until rim is covered with Thermoplastic One-Part Pourable Sealer making sure all voids are filled.
6. To save unused sealant, squeeze air from pouch and replace cap. Unused sealant should be used within 30 days.
7. For results maintain this product at room temperature before use.
8. For cold weather applications remove any frost or moisture from inside pocket using a hand held heat gun.

*Review current Mule-Hide Specifications and Details for specific application requirements.

Precautions

1. Review the applicable Material Safety Data Sheet for complete safety information prior to use.
2. Avoid breathing vapors. Keep container closed when not in use. Use with adequate ventilation. If inhaled, remove to fresh air. If not breathing, perform artificial respiration. If breathing is difficult, give oxygen. Call a physician immediately.
3. If swallowed, DO NOT INDUCE VOMITING! Call a physician immediately.
4. Avoid contact with eyes. Safety glasses or goggles are recommended. If splashed in eyes, immediately flush eyes with water for at least 15 minutes. Contact a physician immediately.
5. Avoid contact with skin. Wash hand thoroughly after handling. In case of contact with skin, thoroughly wash affected area with soap and water.
6. Do not thin. Thinning will affect performance.
7. Avoid contact with non-rubber surfaces as staining will result.
8. KEEP OUT OF REACH OF CHILDREN.

STORAGE & HANDLING

Shelf life is established at 18 months. Shelf life is based on storage in original, unopened or undamaged containers at temperatures ranging from 60°F to 80°F. Should the Pourable Sealer be exposed to lower temperatures, restore to room temperature prior to use.

BLACK ONE-PART POURABLE SEALER

PROTECTION & SAFETY

Mule-Hide maintains Material Safety Data Sheets on all of its products. Material Safety Data Sheets contain health and safety information for your development of appropriate product handling procedures to protect your employees and customers. Mule-Hide's Material Safety Data Sheets should be read and understood by all of your supervisory personnel and employees before using Mule-Hide products in your facilities.

ADDITIONAL INFORMATION

The information given on this PDS is subject to change without notice. Always check the Mule-Hide website at www.mulehide.com for the latest information, changes and updates or contact Mule-Hide Products Company at 800-786-1492.

DISCLAIMER

The statements provided concerning the material shown are intended as a guide for material usage and are believed to be true and accurate at the time of printing. No statement made by anyone may supersede this information, except when done in writing by Mule-Hide Products Co., Inc. Since the manner of use is beyond our control, Mule-Hide does not authorize anyone to make any warranty of merchantability or fitness for any particular purpose or any other warranty, guarantee or representation, expressed or implied, concerning this material. This product may be eligible for a Mule-Hide warranty, please check the Mule-Hide website at www.mulehide.com or contact Mule-Hide directly at 800-786-1492 for details. Buyer and user accept the product under these conditions and assume the risk of any failure, any injury person or property (including that of the user), loss or liability resulting from the handling, storage or use of the product whether or not it is handled, stored or used in accordance with the directions or specifications. Mule-Hide must be notified in writing of any claims and be given the opportunity to inspect the alleged failure before repairs are made.

Mule-Hide Products Co., Inc.
1195 Prince Hall Dr.
Beloit, WI 53511

PRODUCT DATA SHEET
PDS 09-2410
Revision Date: Feb-2014

Low VOC PVC BONDING ADHESIVE

PRODUCT DESCRIPTION

A high strength solvent-based contact adhesive that allows bonding of PVC membranes to various porous and non-porous substrates. It is specially formulated using a blend of VOC-exempt and non-exempt solvents to be in compliance with the state of California Clean Air Act of 1988 (updated in 1997) and as further regulated by California's Air Quality Control Districts listing VOC limitations. This product also meets the 50 gpl VOC content requirements of the OTC Model Rule for Single Ply Roofing Adhesive.

BASIC USES

Mule-Hide Low VOC PVC Bonding Adhesive is used for bonding PVC flashings and membranes to a variety of substrates.

TYPICAL PHYSICAL PROPERTIES

Typical Properties and Characteristics*	
Base	Synthetic Rubber
Color	Pale Yellow to Orange to Amber
Solids	23.6% to 29.6%
Flash Point	-4° F (-20° C) SETA
Brookfield Viscosity	1500 to 4500 Centipoises
Avg. Net Weight	6.9 to 7.7 lbs/gal (0.8 to 9 kg/l)
Packaging	5 Gallon Pail
Shelf Life	1 year

LEED Information	
Pre-consumer Recycled Content	0%
Post-consumer Recycled Content	0%
VOC Content	<250 g/l
Manufacturing Location	Carlisle, PA

*General properties. Typical properties and characteristics are based on samples tested and are not guaranteed for all samples of this product. This data and information is intended as a guide and does not reflect the specification or specification range for any particular property of this product.

BENEFITS & SUPPLEMENTAL STATEMENTS

- High strength adhesive with quick bonding characteristics
- Ease of application with a medium nap roller
- Provides excellent adhesion between PVC membranes and a variety of substrates

CODE APPROVALS/COMPLIANCE

A variety of Factory Mutual Ratings and Underwriter Laboratory Classifications are available. Contact Mule-Hide Technical Department for additional information.

COVERAGE RATES

Low VOC PVC Bonding Adhesive – 60 ft^2 (5.6 square m) per gallon finished surface. Coverage rates are average and may vary due to conditions on the job site. Porous surfaces and substrates may require more bonding adhesive than the typical coverage rate.

INSTALLATION TEMPERATURE

If adhesive is stored at temperatures lower than 60° F, restore to room temperature (~70° F) before use.

Low VOC PVC BONDING ADHESIVE

INSTALLATION INSTRUCTIONS

Surface Preparation

1. The surface, on or against which adhesive is to be applied, shall be clean, smooth, dry, free of fins, sharp edges, loose and foreign materials, oil and grease. Depressions greater than 1/4" (6 mm) should be feathered; using epoxy, mortar or other approved patching material. All sharp projections shall be removed by sweeping, blowing or vacuum cleaning.

Mixing

1. **Stir thoroughly until all settled pigments are dispersed and the adhesive is uniform in color. Stir adhesive for a minimum of 5 minutes.**

Application

1. After thorough stirring (minimum 5 minutes), apply Low VOC PVC Bonding Adhesive to substrate and membrane using a 9" (228 mm) wide, ½" (13mm) medium nap roller. Application shall be continuous and uniform avoiding globs or puddles. An open time of 5 to 90 minutes, based on drying conditions is recommended before assembly. Low VOC PVC Bonding Adhesive must be allowed to dry until tacky but does not string or stick to a dry finger touch. Any coated area, which has been exposed to rain, should be allowed to dry and then recoated. **Do not apply adhesive to seam areas.**

2. Roll the membrane onto the adhesive coated substrate while avoiding wrinkles. Immediately brush down the bonded portion of the sheet with a soft bristle push broom or a clean dry roller applicator to achieve maximum contact.

   REVIEW CURRENT MULE-HIDE SPECIFICATIONS AND DETAILS FOR SPECIFIC APPLICATION REQUIREMENTS.

PRECAUTIONS

1. Review the applicable Material Safety Data Sheet for complete safety information prior to use.

2. Low VOC PVC Bonding Adhesive is **EXTREMELY FLAMMABLE** – It contains solvents that are dangerous fire and explosion hazards when exposed to heat, flame or sparks. Do not smoke while applying. Do not use in a confined or unventilated area. Vapors are heavier than air and may travel along ground or may be moved by ventilation and ignited by pilot lights, other flames, sparks, heaters, smoking, electrical motors, static discharge, or other ignition sources at locations distant from material handling point and flashback. All containers should be grounded when material is transferred from one container to another. A red caution label is required when shipping. A fire extinguisher should be available. In case of fire, use water spray, foam, dry chemical or carbon dioxide. Do not use a solid stream of water because it can scatter and spread the fire.

3. Avoid breathing vapors. Keep container closed when not in use. Use with adequate ventilation. If inhaled, remove to fresh air. If not breathing, perform artificial respiration. If breathing is difficult, give oxygen. Call a physician immediately. During application, efforts must be made to prevent fumes from entering the building via air ventilation ducts. Do not place open containers or mix adhesive near fresh air intake units. When possible, shut down or seal off the closest units.

4. If swallowed, **DO NOT INDUCE VOMITING.** Call a physician immediately.

Low VOC PVC BONDING ADHESIVE

PRECAUTIONS (Continued)

5. Avoid contact with eyes. Safety glasses or goggles are recommended. If splashed in eyes, immediately flush eyes with plenty of clean water for at least 15 minutes. Contact a physician immediately.

6. Avoid contact with skin. Wash hands thoroughly after handling. In case of contact with skin, thoroughly wash affected area with soap and water. Contact physician if irritation persists. Note: Permeation resistant gloves (that meet ANSI/ISEA 105-2005) are recommended to be worn when using this product to protect hands from irritating ingredients.

7. Do not thin Low VOC PVC Bonding Adhesive. Thinning will affect performance. Excessively thick or gelled material should be discarded.

8. Job site storage in excess of 90ºF (32ºC) may affect product shelf life. Should the Low VOC PVC Bonding Adhesive be stored at temperatures lower than 60ºF (15ºC), restore to room temperature prior to use.

9. Opened containers of Low VOC PVC Bonding Adhesive should be used within 48 hours. Adhesives will begin to thicken after this point, making it difficult and eventually impossible, to control applied thickness. In hot weather, do not leave sealed containers on roof for prolonged periods of time. In cold weather, keep material at room temperature until ready to use. Stir adhesive occasionally while using.

10. **Adhesive must be allowed to dry thoroughly.** If membrane is mated with the substrate prior to the adhesive being dry, blistering will occur and not subside over time.

11. **KEEP OUT OF THE REACH OF CHILDREN.**

PROTECTION & SAFETY

Mule-Hide maintains Material Safety Data Sheets on all of its products. Material Safety Data Sheets contain health and safety information for your development of appropriate product handling procedures to protect your employees and customers. Mule-Hide's Material Safety Data Sheets should be read and understood by all of your supervisory personnel and employees before using Mule-Hide products in your facilities.

ADDITIONAL INFORMATION

The information given on this PDS is subject to change without notice. Always check the Mule-Hide website at www.mulehide.com for the latest information, changes and updates or contact Mule-Hide Products Company at 800-786-1492.

DISCLAIMER

The statements provided concerning the material shown are intended as a guide for material usage and are believed to be true and accurate at the time of printing. No statement made by anyone may supersede this information, except when done in writing by Mule-Hide Products Co., Inc. Since the manner of use is beyond our control, Mule-Hide does not authorize anyone to make any warranty of merchantability or fitness for any particular purpose or any other warranty, guarantee or representation, expressed or implied, concerning this material. This product may be eligible for a Mule-Hide warranty, please check the Mule-Hide website at www.mulehide.com or contact Mule-Hide directly at 800-786-1492 for details. Buyer and user accept the product under these conditions and assume the risk of any failure, any injury person or property (including that of the user), loss or liability resulting from the handling, storage or use of the product whether or not it is handled, stored or used in accordance with the directions or specifications. Mule-Hide must be notified in writing of any claims and be given the opportunity to inspect the alleged failure before repairs are made.

Mule-Hide Products Co., Inc.
1195 Prince Hall Dr.
Beloit, WI 53511

WBBA 2000

PRODUCT DESCRIPTION

WBBA 2000 is a semi pressure-sensitive water base bonding adhesive that can be used with Mule-Hide fleece back membranes as well as standard (non fleece back) EPDM, TPO, and PVC membranes. WBBA 2000 offers high peel strength with low-VOCs and no strong odors.

BASIC USES

WBBA 2000 bonding adhesive can be used as a single side, wet lay-in adhesive on horizontal surfaces with our Mule-Hide fleece back membranes. It can also be used as a two-sided, contact adhesive with our standard (non-fleece back) EPDM, TPO and PVC roofing membranes on both vertical and horizontal surfaces.

TYPICAL PHYSICAL PROPERTIES

Typical values*	
Base Material	Acrylic
Color	White (translucent when dry)
Solids	62.5%
VOC:	8 g/l max
Flash Point	None
Brookfield Viscosity	16,000 Centipoises
Avg Net Weight	8.8 lbs. / gallon (3.99 Kg)
Packaging	5 Gallon Pails
Shelf Life	1 Year

*General properties. Typical properties and characteristics are based on samples tested and are not guaranteed for all samples of this product. This data and information is intended as a guide and does not reflect the specification or specification range for any particular property of this product.

PACKAGING

5 Gallon Pails

COVERAGE RATES

Fleece Back Membranes - Single-side, wet lay-in: Coverage rate for WBBA 2000 applied as single side, wet lay-in is approximately 100 to 120 ft² (10.2 square m) of finished surface per gallon

Standard (non-fleece back) Membranes - Double-sided, contact lay-in: Coverage rate for WBBA 2000 applied as double sided, contact lay-in is approximately 50 to 60 ft² (5.1 square m) of finished surface per gallon (membrane and substrate).

These coverage rates are an average and may vary due to conditions on the job site. Porous surfaces and substrates may require more bonding adhesive than the typical coverage rate information shown above.

INSTALLATION TEMPERATURE

Adhesive is designed to be applied when ambient temperature is 40°F (4°C) and rising. Do not apply if ambient temperature will drop below 32°F (0°C) before adhesive completely dries.

DO NOT ALLOW PRODUCT TO FREEZE. Frozen product is un-usable and must be discarded.

WBBA 2000

INSTALLATION INSTRUCTIONS

1. The surface to which adhesive is to be applied must be clean, smooth, dry, free of fins, sharp edges, loose and foreign materials. Depressions or offsets greater than ¼" should be feathered using epoxy, mortar or other approved material. All sharp projections shall be removed by sweeping, blowing or vacuum cleaning.

2. WBBA 2000 bonding adhesive is approved for use on (max) 15-year warranties over Polyiso, Dens Deck Prime, High Density Fiberboard, OSB, Plywood, cellular lightweight concrete and structural concrete.

3. Mix adhesive thoroughly scraping the sides and bottom of the can (minimum of 5 minutes is required) until adhesive is uniform in color.

4. Using a ¼" or ⅜" nap roller apply adhesive in a uniform manner avoiding globs, puddles and holidays (uncoated areas). Avoid accumulation of adhesive between insulation joints. Do not exceed published application rates.

Single Side (wet lay-in) Application with Fleece Back Membranes

1. Apply a smooth even coating of WBBA 2000 bonding adhesive to the substrate at the rate of 100 to 120 square feet per gallon and immediately roll the fleece back membrane into the wet adhesive.

2. Once the membrane has been mated to the substrate, broom the membrane with a stiff bristled push broom to ensure proper contact and 100% adhesion.

4. WBBA 2000 bonding adhesive can be applied with a 1/8" notched squeegee or a medium nap roller. Note: Adhesive must be wet at time of membrane placement.

5. Do not apply adhesive in seam lap areas that are to be heat welded.

Two-Sided Contact Application with Standard (non- fleece back) Membranes - Horizontal Surfaces

1. Apply a smooth, even coat of WBBA 2000 bonding adhesive to the back side of the membrane and substrate. Do not apply adhesive in area of seam laps.

2. Coverage rate to be approximately:
   120 square feet per gallon for one surface (membrane or substrate only) or
   60 square feet per gallon per finished surface (membrane and substrate)

3. Allow adhesive to dry until it turns translucent and does not transfer to a dry finger or pull away from the substrate. WBBA 2000 bonding adhesive will take a longer time to dry. Adhesive must be dry but still tacky (but not string) when the sheet is mated to the substrate. Do not allow to over dry.

4. Mate surfaces together avoiding wrinkles. Immediately roll the bonded area of the sheet with a 100 to 150 lbs roller to ensure full contact. It is important to thoroughly roll the membrane over all insulation joints. Repeat this procedure for remaining sheets.

5. Extended drying times can be expected during cool, overcast, humid, shaded, or late day applications. The adhesive must be dry (but still tacky) before mating surfaces to avoid permanent blisters due to trapped moisture or a lack of sufficient adhesion.

WBBA 2000

Standard Membrane (vertical walls two-sided contact application)

1. Apply a smooth, even coat of WBBA 2000 bonding adhesive to the back side of the membrane and substrate. Do not apply adhesive in area of seam laps.

2. Coverage rate to be approximately:
   120 square feet per gallon for one surface (membrane or substrate only) or
   60 square feet per gallon per finished surface (membrane and substrate)

3. Allow adhesive to dry until it turns translucent and does not transfer to a dry finger or pull away from the substrate. WBBA 2000 bonding adhesive will take a longer time to dry. Adhesive must be dry but still tacky (but not string) when the sheet is mated to the vertical surface. Do not allow to over dry.

4. Mate surfaces together avoiding wrinkles. Immediately roll the bonded area of the sheet with a 2-inch wide rubber hand roller to promote maximum positive contact between the membrane and the substrate. Overlap all adjacent flashing sheets a minimum of 2 inches. The Heat-Weld Membrane Flashings shall extend a minimum of 6 inches onto the field sheet and be securely adhered. There shall be a minimum 2 inches hot-air weld in front of the fastener plates. All side laps are to overlap a minimum of 2 inches.

5. Extended drying times can be expected during cool, overcast, humid, shaded, or late day applications. The adhesive must be dry (but still tacky) before mating surfaces to avoid permanent blisters due to trapped moisture or lack of sufficient adhesion...

Precautions

1. Review the applicable Material Safety Data Sheet for complete safety information prior to use.

2. Avoid breathing vapors. Keep container closed when not in use. Use with adequate ventilation. If inhaled, remove to fresh air.

3. If swallowed, **DO NOT INDUCE VOMITING.** Call a physician immediately.

4. Avoid contact with skin. Wash hands thoroughly after handling. In case of contact with skin, thoroughly wash affected area with soap and water.

5. Avoid contact with eyes. Safety glasses or goggles are recommended. If splashed in eyes, immediately flush eyes with plenty of clean water for at least 15 minutes. Contact a physician immediately.

6. Do not thin WBBA 2000. Thinning will affect performance and may coagulate the adhesive.

7. Job site storage in excess of 90°F (32°C) may affect product shelf life. DO NOT ALLOW WBBA 2000 TO FREEZE. Do not store below 40°F.

8. WBBA 2000 will turn translucent or clear when completely dry. Dry time is dependent upon ambient conditions.

9. WBBA 2000 is to be used when ambient temperatures are 40°F (4°F and rising. Do not apply if ambient temperature will drop below 32°F (0°F) before adhesive completely dries.

10. Open containers of WBBA 2000 should be used within 48 hours. Adhesive will form a thick skin in the container that will not dissolve. Remaining adhesive can be used once the skinned layer has been removed.

WBBA 2000

Precautions (continued)

11. Extended drying times can be expected in cool or humid conditions as well as shaded areas. Not allowing the adhesive to properly dry in a two-sided contact adhesive application will result in poor adhesive strength and/or blisters occurring over time.

12. Keep out of reach of children.

STORAGE & HANDLING

Job site storage in excess of 90°F (32°C) may affect product shelf life. DO NOT ALLOW WBBA 2000 TO FREEZE. Do not store below 40°F.

PROTECTION & SAFETY

Mule-Hide maintains Material Safety Data Sheets on all of its products. Material Safety Data Sheets contain health and safety information for your development of appropriate product handling procedures to protect your employees and customers. Mule-Hide's Material Safety Data Sheets should be read and understood by all of your supervisory personnel and employees before using Mule-Hide products in your facilities.

ADDITIONAL INFORMATION

The information given on this PDS is subject to change without notice. Always check the Mule-Hide website at www.mulehide.com for the latest information, changes and updates or contact Mule-Hide Products Company at 800-786-1492.

DISCLAIMER

The statements provided concerning the material shown are intended as a guide for material usage and are believed to be true and accurate at the time of printing. No statement made by anyone may supersede this information, except when done in writing by Mule-Hide Products Co., Inc. Since the manner of use is beyond our control, Mule-Hide does not authorize anyone to make any warranty of merchantability or fitness for any particular purpose or any other warranty, guarantee or representation, expressed or implied, concerning this material. This product may be eligible for a Mule-Hide warranty, please check the Mule-Hide website at www.mulehide.com or contact Mule-Hide directly at 800-786-1492 for details. Buyer and user accept the product under these conditions and assume the risk of any failure, any injury person or property (including that of the user), loss or liability resulting from the handling, storage or use of the product whether or not it is handled, stored or used in accordance with the directions or specifications. Mule-Hide must be notified in writing of any claims and be given the opportunity to inspect the alleged failure before repairs are made.

Mule-Hide Products Co., Inc.
1195 Prince Hall Dr.
Beloit, WI 53511

PRODUCT DATA SHEET
PDS 09-3110
Revision Date: FEB-2014

MULE-HIDE PVC MEMBRANE CLEANER

PRODUCT DESCRIPTION

Mule-Hide PVC Membrane Cleaner is a clear liquid solvent used to clean PVC membranes that have been exposed to the weather prior to heat welding.

BASIC USES

Mule-Hide PVC Membrane Cleaner is used to clean areas on the PVC membrane that has been exposed to weather prior to welding new material. This cleaner helps to loosen and remove dirt and other contaminants from the surface of the PVC membranes and leaves a suitable surface for welding.

TYPICAL PHYSICAL PROPERTIES

Typical Properties and Characteristics	
Color	Clear
Solids	0%
Flash Point	-4ºF (-20ºC)
Boiling Point	133ºF (56ºC)
Packaging	5-gallon (18.9 liter) closed top pail Cartons of 2 x 1-gallon (3.8 liter)
Typical properties and characteristics are based on samples tested and are not guaranteed for all samples of this product. This data and information is intended as a guide and does not reflect the specification or specification range for any particular property of this product.	

LEED Information	
Pre-consumer recycle content	0%
Post-consumer recycle content	0%
Manufacturing Location	Carlisle, PA
VOC Content*	755 grams/liter
*This product is exempt from VOC regulations.	

BENEFITS & SUPPLEMENTAL STATEMENTS

- Easily removes dirt and other contaminates from PVC membranes
- Ready to use, no mixing required
- Improves heat welding of soiled PVC membranes

COVERAGE RATES

Coverage rate depends on the age of the membrane and amount of dirt/debris on the surface. Coverage is approximately 400 square feet (one surface) per gallon

INSTALLATION INSTRUCTIONS

1. Remove as much loose material as possible from the membrane surface where the adhesive or pressure-sensitive product will be applied by brooming or wiping the area with a dry rag. Extreme conditions of accumulated dirt may require a low sudsing detergent and water cleaning (rinse area thoroughly with CLEAN water and allow to dry).
2. Saturate a clean rag with Weathered Membrane Cleaner.
    a. For AGED PVC, use a Scotch-Brite® pad and Weathered Membrane Cleaner, scrub the area to be welded
3. Wipe the area to be cleaned until the membrane is a consistent color with no streaking and allow to dry.
4. Weld the cleaned membrane together with an appropriate hot-air welder.

Review Mule-Hide Specifications and Details for additional information.

PRODUCT NAME

PRECAUTIONS

1. Review the applicable Material Safety Data Sheet for complete safety information prior to use
2. Weathered Membrane Cleaner is **EXTREMELY FLAMMABLE** -It contains solvents that are dangerous fire and explosion hazards when exposed to heat, flame or sparks. Do not smoke while applying. Do not use in a confined or unventilated area. Vapors are heavier than air and may travel along ground or may be moved by ventilation and ignited by pilot lights, other flames, sparks, heaters, smoking, electrical motors, static discharge, or other ignition sources at locations distant from material handling point and flashback. All containers should be grounded when material is transferred from one container to another. A red caution label is required when shipping. A fire extinguisher should be available. In case of fire, use water spray, foam, dry chemical or carbon dioxide. Do not use a solid stream of water because it can scatter and spread the fire.
3. Avoid breathing vapors. Keep container closed when not in use. Use with adequate ventilation. If inhaled, remove to fresh air. If not breathing, perform artificial respiration. If breathing is difficult, give oxygen. Call a physician immediately. During application, efforts must be made to prevent fumes from entering the building via air ventilation ducts. Do not place open containers or mix adhesive near fresh air intake units. When possible, shut down or seal off the closest units.
4. If swallowed, **DO NOT INDUCE VOMITING.** Call a physician immediately.
5. Avoid contact with skin. Wash hands thoroughly after handling. In case of contact with skin, thoroughly wash affected area with soap and water. Contact physician if irritation persists. **Note:** Permeation resistant gloves (that meet ANSI/ISEA 105-2005) are recommended to be worn when using this product to protect hands from irritating ingredients.
6. Avoid contact with eyes. Safety glasses or goggles are recommended. If splashed in eyes, immediately flush eyes with plenty of clean water for at least 15 minutes. Contact a physician immediately.
7. **KEEP OUT OF REACH OF CHILDREN.**

PROTECTION & SAFETY

Mule-Hide maintains Material Safety Data Sheets on all of its products. Material Safety Data Sheets contain health and safety information for your development of appropriate product handling procedures to protect your employees and customers. Mule-Hide's Material Safety Data Sheets should be read and understood by all of your supervisory personnel and employees before using Mule-Hide products in your facilities.

ADDITIONAL INFORMATION

The information given on this PDS is subject to change without notice. Always check the Mule-Hide website at www.mulehide.com for the latest information, changes and updates or contact Mule-Hide Products Company at 800-786-1492.

DISCLAIMER

The statements provided concerning the material shown are intended as a guide for material usage and are believed to be true and accurate at the time of printing. No statement made by anyone may supersede this information, except when done in writing by Mule-Hide Products Co., Inc. Since the manner of use is beyond our control, Mule-Hide does not authorize anyone to make any warranty of merchantability or fitness for any particular purpose or any other warranty, guarantee or representation, expressed or implied, concerning this material. This product may be eligible for a Mule-Hide warranty, please check the Mule-Hide website at www.mulehide.com or contact Mule-Hide directly at 800-786-1492 for details. Buyer and user accept the product under these conditions and assume the risk of any failure, any injury person or property (including that of the user), loss or liability resulting from the handling, storage or use of the product whether or not it is handled, stored or used in accordance with the directions or specifications. Mule-Hide must be notified in writing of any claims and be given the opportunity to inspect the alleged failure before repairs are made.

Mule-Hide Products Co., Inc.
1195 Prince Hall Dr.
Beloit, WI 53511

PRODUCT DATA SHEET
PDS 09-3410
Revision Date: FEB-2014

MULE-HIDE PVC CUT-EDGE SEALANT

PRODUCT DESCRIPTION

Mule-Hide PVC Cut-Edge Sealant is a free flowing polymeric material designed for use at the cut edge (exposed scrim) of Mule-Hide PVC reinforced Membrane seams after the membrane has been welded to itself or to Mule-Hide PVC Coated Metal.

BASIC USES

Mule-Hide PVC-Edge Sealant is required to seal all cut edges of the PVC membrane where the reinforcing scrim is exposed to weather.

TYPICAL PHYSICAL PROPERTIES

Typical Properties and Characteristics*	
Base	Synthetic Polymer
Color	Clear
Solids	18%
Viscosity	740 cps
Flash Point	1ºF (-17ºC)
Net Weight Gallon	7.8 lbs (3.5 kg)
Resistance to Ozone	Excellent
Resistance to UV	Excellent
Resistance to Water	Excellent
Packaging	12, 16-oz bottles/carton (3.8 L)
Shelf Life	1 Year

LEED Properties	
Pre-consumer Recycled Content	0%
Post-consumer Recycled Content	0%
Manufacturing Location	Rockland, MA
VOC	737 g/L

* Typical properties and characteristics are based on samples tested and are not guaranteed for all samples of this product. This data and information is intended as a guide and does not reflect the specification or specification range for any particular property of this product.

PACKAGING

Mule-Hide PVC Cut-Edge Sealant is available in 16 oz. bottles packaged 12 bottles per carton. PVC Cut-Edge Sealant must be stored in a dry area protected from weather and extreme temperatures until just prior to use. Do not allow the sealant to freeze. Close container tightly after each use.

BENEFITS & SUPPLEMENTAL STATEMENTS

- Squeeze-bottle packaging allows easy, no mess application
- Available in clear color
- Provides excellent sealing of exposed fabric at cut membrane edges

COVERAGE RATES

Approximately 225'–275' (70 – 85 m) per bottle when applied with 1⁄8" (3 mm) bead.

INSTALLATION INSTRUCTIONS

1. All surfaces to be sealed with PVC Cut-Edge Sealant must be clean, dry and free from oil, grease, dirt and other foreign materials.
2. Apply 1a⁄8" (3 mm) bead of PVC Cut-Edge Sealant from the plastic squeeze bottle to seal cut edges of reinforced PVC Membrane. Do not apply PVC Cut-Edge Sealant on vertical surfaces.

MULE-HIDE PVC CUT-EDGE SEALANT

INSTALLATION INSTRUCTIONS (Continued)

3. Sealant should be tack-free in 2 hours and fully cured in 24 hours depending on weather conditions and application thickness.
   Review Mule-Hide Specifications and details for complete application information.

PRECAUTIONS

1. Review the applicable Material Safety Data Sheets for complete safety information.
2. PVC Cut-Edge Sealant is FLAMMABLE – it contains solvents that are dangerous fire and explosion hazards when exposed to heat, flame or spark. Do not smoke while applying. Do not use in a confined area or unventilated area. Vapors are heavier than air and may travel along the ground to a distant ignition source and flashback.
3. Avoid breathing vapors. Keep container closed when not in use. Use with adequate ventilation. If inhaled, remove to fresh air. If not breathing, perform artificial respiration. If breathing is difficult, give oxygen. Call a physician immediately.
4. If swallowed, DO NOT INDUCE VOMITING. Call a physician immediately
5. Avoid contact with eyes. Safety glasses or goggles are recommended. If splashed in eyes, immediately flush eyes with plenty of water for at least 15 minutes. Contact a physician immediately.
6. Avoid contact with skin. Permeation-resistant gloves (that meet ANSI/ ISEA 105-2005) recommended. Wash thoroughly after handling. In case of contact with skin, thoroughly wash affected area with soap and water.
7. Jobsite storage temperatures in excess of 90°F (32°C) may affect product shelf life. Should the Cut-Edge Sealant be stored at temperatures below 60°F (15°C), restore to room temperature prior to use.
8. KEEP OUT OF THE REACH OF CHILDREN

PROTECTION & SAFETY

Mule-Hide maintains Material Safety Data Sheets on all of its products. Material Safety Data Sheets contain health and safety information for your development of appropriate product handling procedures to protect your employees and customers. Mule-Hide's Material Safety Data Sheets should be read and understood by all of your supervisory personnel and employees before using Mule-Hide products in your facilities.

ADDITIONAL INFORMATION

The information given on this PDS is subject to change without notice. Always check the Mule-Hide website at www.mulehide.com for the latest information, changes and updates or contact Mule-Hide Products Company at 800-786-1492.

DISCLAIMER

The statements provided concerning the material shown are intended as a guide for material usage and are believed to be true and accurate at the time of printing. No statement made by anyone may supersede this information, except when done in writing by Mule-Hide Products Co., Inc. Since the manner of use is beyond our control, Mule-Hide does not authorize anyone to make any warranty of merchantability or fitness for any particular purpose or any other warranty, guarantee or representation, expressed or implied, concerning this material. This product may be eligible for a Mule-Hide warranty, please check the Mule-Hide website at www.mulehide.com or contact Mule-Hide directly at 800-786-1492 for details. Buyer and user accept the product under these conditions and assume the risk of any failure, any injury person or property (including that of the user), loss or liability resulting from the handling, storage or use of the product whether or not it is handled, stored or used in accordance with the directions or specifications. Mule-Hide must be notified in writing of any claims and be given the opportunity to inspect the alleged failure before repairs are made.

Mule-Hide Products Co., Inc.
1195 Prince Hall Dr.
Beloit, WI 53511

MULE-HIDE PVC NON-REINFORCED FLASHING

PRODUCT DESCRIPTION

Mule-Hide PVC Non-Reinforced Flashing is a non-reinforced thermoplastic poly vinyl chloride based membrane.

BASIC USES

Mule-Hide PVC Non-Reinforced Flashing is used for sealing joints of Mule-Hide PVC Coated Metal, drain details and field flashing pipes and other details where reinforced membrane or the used of pre-molded accessories are not feasible.

TYPICAL PHYSICAL PROPERTIES

Property*	Test Method	Specification
Tolerance on nominal Thickness, %	ASTM D 751	+/- 8
Tensile Strength, min psi	ASTM D 638	1500
Elongation, ultimate, min %	ASTM D 638	250/200
Weight, lb/ft^2, typical		.51 lb/ft^2
Tear strength, min., lbf/in	ASTM D 1004	10
Heat aging: 28 days % Retention	ASTM D 4434	90
Resistance to Xenon-arc weathering	ASTM D 4434	No cracking/crazing
Xenon-arc, 5040 kJ/m^2 total		Negligible
Radiant exposure, visual		discoloration
Condition at 7X		

* Typical properties and characteristics are based on samples tested and are not guaranteed for all samples of this product. This data and information is intended as a guide and does not reflect the specification or specification range for any particular property of this product.

COLORS

Available in White/Gray and White/Tan

PACKAGING

12” x 50’ roll
24” x 50’ roll

INSTALLATION INSTRUCTIONS

1. Mule-Hide PVC Flashing is used to flash a variety of roofing structures and penetrations and specific installation methods will vary. Refer to the appropriate Mule-Hide specification and/or detail for specific installation information.
2. A lower heat setting is required on the heat welder when hot air welding the un-reinforced flashing membrane. A typical starting setting is 6, on a scale of 1 to10.
3. Use the edge of the roller to crease the flashing into any membrane step-offs to achieve a proper seal.

PRECAUTIONS

1. Review the applicable Material Safety Data Sheet for complete safety information prior to use.
2. UV filtering sunglasses are strongly recommended when working with Mule-Hide PVC roofing systems.

MULE-HIDE PVC NON-REINFORCED FLASHING

PRECAUTIONS (Continued)

3. Store Mule-Hide PVC Flashing in a cool, shaded area and cover with light-colored, breathable, waterproof tarpaulins.
4. PVC Flashing material that has been exposed to the weather for approximately 7 days or longer prior to use must be prepared with Weather Membrane Cleaner prior to hot-air welding.

PROTECTION & SAFETY

Mule-Hide maintains Material Safety Data Sheets on all of its products. Material Safety Data Sheets contain health and safety information for your development of appropriate product handling procedures to protect your employees and customers. Mule-Hide's Material Safety Data Sheets should be read and understood by all of your supervisory personnel and employees before using Mule-Hide products in your facilities.

ADDITIONAL INFORMATION

The information given on this PDS is subject to change without notice. Always check the Mule-Hide website at www.mulehide.com for the latest information, changes and updates or contact Mule-Hide Products Company at 800-786-1492.

DISCLAIMER

The statements provided concerning the material shown are intended as a guide for material usage and are believed to be true and accurate at the time of printing. No statement made by anyone may supersede this information, except when done in writing by Mule-Hide Products Co., Inc. Since the manner of use is beyond our control, Mule-Hide does not authorize anyone to make any warranty of merchantability or fitness for any particular purpose or any other warranty, guarantee or representation, expressed or implied, concerning this material. This product may be eligible for a Mule-Hide warranty, please check the Mule-Hide website at www.mulehide.com or contact Mule-Hide directly at 800-786-1492 for details. Buyer and user accept the product under these conditions and assume the risk of any failure, any injury person or property (including that of the user), loss or liability resulting from the handling, storage or use of the product whether or not it is handled, stored or used in accordance with the directions or specifications. Mule-Hide must be notified in writing of any claims and be given the opportunity to inspect the alleged failure before repairs are made.

Mule-Hide Products Co., Inc.
1195 Prince Hall Dr.
Beloit, WI 53511

PRODUCT DATA SHEET
PDS 09-4210
Revision Date: Jan-2014

PVC MOLDED SEALANT POCKETS

PRODUCT DESCRIPTION

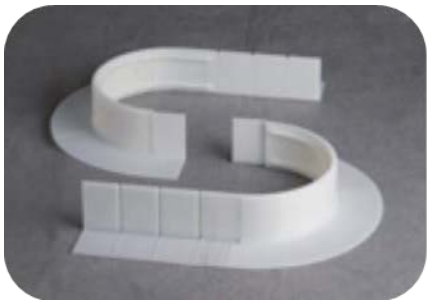

Mule-Hide PVC Molded Sealant Pockets are Interlocking, two-piece prefabricated pockets of non-reinforced PVC material used to seal pipe clusters or other irregular shaped penetrations. Pockets length can be adjusted from 7 ½" to 11 ½" by following the pre-molded cutting lines.

BASIC USES

Mule-Hide PVC Molded Sealant Pockets are ideal for sealing irregular, hard to flash penetrations in a Mule-Hide system.

BENEFITS & SUPPLEMENTAL STATEMENTS

- Provides a reliable, cost saving method to waterproof odd shaped penetrations
- Pockets are easily adjustable by cutting on pre-molded cutting lines.
- Larger pockets can be created with the use of pocket extensions

SPECIFICATIONS

Color:	White
Size:	11.5" to 7.5" length by 6" oval (29 cm to 19 cm by 15 cm)
Packaging:	5 Pockets per carton
Weight:	0.55 lbs each (0.25 kg)

Typical properties and characteristics are based on samples tested and are not guaranteed for all samples of this product. This data and information is intended as a guide and does not reflect the specification or specification range for any particular property of this product.

INSTALLATION INSTRUCTIONS

1. Place PVC Molded Sealant Pocket around penetration to determine if pocket requires re-sizing. Pocket must maintain a minimum 1" clearance from penetrations. Pocket can be reduced in size by cutting on pre- molded cut lines or enlarged by using pocket extensions.
2. Clean all surfaces of the PVC Molded Sealant Pocket that will be heat welded, along with all inside surfaces that will contact sealer with Weathered Membrane Cleaner.
3. Using Weathered Membrane Cleaner, also clean surface of membrane to which sealant pocket will be welded, along with surface of penetration(s). Use a primer pad with the cleaner if membrane surface has been exposed for an extended period of time.
4. Place PVC Molded Sealant Pocket around penetration(s), overlapping the two sections of the pocket.
5. Place a piece of cardboard (approximately 4" x 4") between the overlapped are of the Sealant Pocket and the field membrane. Cardboard will help prevent Sealant Pocket from becoming welded to membrane when overlaps are first welded.
6. Using a hand welder, weld the angle change in the overlap area. Use of a seam probe may assist in making this weld. Hand welder temperature is typically set between 5 or 6 for this step.
7. Hand weld the remainder of the horizontal overlap.
8. Repeat steps 4 – 6 to weld the overlap on opposite side of the Sealant Pocket.
9. Position Sealant Pocket so that vertical overlap is against the penetration. This will facilitate heat welding of vertical seam by allowing proper pressure to be applied with 2" silicon roller.
10. Weld both vertical overlaps starting at the angle change and working to the top of the pocket.
11. Position Sealant Pocket in final location and hold in place with tack welds on all four side of flange.
12. Weld entire deck flange to the deck membrane.

MOLDED SEALANT POCKETS

INSTALLATION INSTRUCTIONS (continued)

13. Allow welds to completely cool and then check with seam probe. Make any repairs as needed.
14. Make sure all voids or openings between the penetration(s) and membrane inside the pocket are sealed (use caulk or tape for sealing) before filling pocket. Openings will allow sealer to penetrate into the deck and possibly the building.
15. Complete fill Sealant Pocket with Thermoplastic One-Part Sealer. Ensure that sealer is in contact with top rim of Sealant Pocket.

PRECAUTIONS

1. Maximum temperature of penetration(s) cannot exceed 160ºF (71ºC).
2. All surfaces coming in contact with sealer must be first cleaned with Weathered Membrane Cleaner. Tape Primer is NOT USED with PVC.
3. Mule-Hide Thermoplastic One-Part Sealer must completely fill the sealant pocket.
4. There must be a minimum clearance of 1" between sealer pocket and penetration(s).
5. When working on a Mule-Hide PVC roofing system, it is recommended that UV filtering sunglass be worn.
6. Sealant Pockets or PVC membrane that has been exposed to the weather must be first cleaned with Weathered Membrane Cleaner prior to heat welding. Use a primer pad with the cleaner if surfaces have been exposed for an extended period of time.

STORAGE & HANDLING

Store sealant pockets in a cool, shaded area and cover with light-colored, breathable, waterproof tarpaulins.

PROTECTION & SAFETY

Mule-Hide maintains Material Safety Data Sheets on all of its products. Material Safety Data Sheets contain health and safety information for your development of appropriate product handling procedures to protect your employees and customers. Mule-Hide's Material Safety Data Sheets should be read and understood by all of your supervisory personnel and employees before using Mule-Hide products in your facilities.

ADDITIONAL INFORMATION

The information given on this PDS is subject to change without notice. Always check the Mule-Hide website at www.mulehide.com for the latest information, changes and updates or contact Mule-Hide Products Company at 800-786-1492.

DISCLAIMER

The statements provided concerning the material shown are intended as a guide for material usage and are believed to be true and accurate at the time of printing. No statement made by anyone may supersede this information, except when done in writing by Mule-Hide Products Co., Inc. Since the manner of use is beyond our control, Mule-Hide does not authorize anyone to make any warranty of merchantability or fitness for any particular purpose or any other warranty, guarantee or representation, expressed or implied, concerning this material. This product may be eligible for a Mule-Hide warranty, please check the Mule-Hide website at www.mulehide.com or contact Mule-Hide directly at 800-786-1492 for details. Buyer and user accept the product under these conditions and assume the risk of any failure, any injury person or property (including that of the user), loss or liability resulting from the handling, storage or use of the product whether or not it is handled, stored or used in accordance with the directions or specifications. Mule-Hide must be notified in writing of any claims and be given the opportunity to inspect the alleged failure before repairs are made.

Mule-Hide Products Co., Inc.
1195 Prince Hall Dr.
Beloit, WI 53511

PRODUCT DATA SHEET
PDS 09-4310
Revision Date: Feb-2014

MULE-HIDE PVC PIPE SEALS

PRODUCT DESCRIPTION

Mule-Hide PVC Pipe Seals are an injection molded, pre-formed flashing for pipes made of Mule-Hide non-reinforced PVC material. They are designed to add ease to the installation process while offering increased watertight security and improved aesthetics.

BASIC USES

Mule-Hide PVC Pipe Seals are designed as an economical flashing for single pipe penetrations on Mule-Hide PVC-c Membrane roof systems. PVC Pipe Seals can be used wherever the PVC Pipe Seals may be slipped over the top of the pipe.

TYPICAL PHYSICAL PROPERTIES

Typical Properties and Characteristic	
Sizes	¾" to 8" od (19.0 to 203.2 mm)
Packaging	8 per box
Weight (each)	0.55 lbs (0.25 kg)
Material	Injection molded PVC
Color	White
Service Temp	Max 160°F (71°C)

BENEFITS & SUPPLEMENTAL STATEMENTS

Provides a reliable method of waterproofing round pipe penetrations
Offers substantial labor savings when compared to field fabrication

INSTALLATION INSTRUCTIONS

1. Remove all existing lead and other flashings.
2. Temperature of pipe must not exceed 160°F (71°C)
3. Cut pipe seal to the desired diameter by cutting between two raised 'ribs' as illustrated on flange of pipe seal. (Do not cut off both raised 'ribs')
4. Pull pipe seal over pipe until base flange is in contact with the membrane. Top portion of pipe seal may be heated to facilitate installation.
5. Mark pipe around top of pipe seal.
6. Pull pipe seal upward until mark on pipe is visible.
7. For mechanically attached systems, install seam plates and fasteners at base of projection. Seam plates must fit inside flange of pipe seal.
8. Install Water Cut-off Mastic below mark on pipe.
9. Pull pipe seal back down over pipe and into position with flange contacting membrane.
10. Heat weld pipe seal to field membrane. Hand gun should be set between 6 and 7.
11. Install stainless steel clamping ring at top of pipe seal to ensure constant compression of the sealant. Do not over tighten clamp.

STORAGE & HANDLING

Store pre-molded pipe seals in a cool, shaded area and cover with a light-colored breathable, waterproof tarpaulin. Pipe seals that have been exposed to the elements must be prepared with weathered membrane cleaner prior to heat welding.

MULE-HIDE PVC PIPE SEALS

PROTECTION & SAFETY

Mule-Hide maintains Material Safety Data Sheets on all of its products. Material Safety Data Sheets contain health and safety information for your development of appropriate product handling procedures to protect your employees and customers. Mule-Hide's Material Safety Data Sheets should be read and understood by all of your supervisory personnel and employees before using Mule-Hide products in your facilities.

ADDITIONAL INFORMATION

Copper Tubing (C.T.S.)											
Nominal Tube Size	¾”	1”	1 ¼”	1 ½”	2”	2 ½”	3”	4”	5”	6”	8”
Pipe O.D.	0.88	1.13	1.38	1.63	2.13	2.63	3.13	4.13	5.13	6.13	N/A
Step of Boot Used	1	1	1	1 ½	2	2	3	4	5	6	N/A
Schedule 40 / 80 Steep Pipe – PVC Standard – Polyethylene Pipe IPS											
Nominal Pipe Size	¾”	1”	1 ¼”	1 ½”	2”	2 ½”	3”	4”	5”	6”	8”
Pipe O.D.	1.05	1.32	1.66	1.90	2.38	2.88	3.50	4.50	5.56	6.63	8.63
Step of Boot Used	1	1	1 ½	1 ½	2	3	3	4	5	6	8
Cast Iron Pipe	**Pit Class A & Spun 100-250**					**Pit Class B, C & D**					
Nominal Pipe Size	2”	3”	4”	6”	8”	2”	3”	4”	6”	8”	
Pipe O.D.	2.50	3.96	4.80	6.90	9.50	N/A	3.96	5.00	7.10	9.30	
Step of Boot Used	2	4	5	6	N/A	N/A	4	5	6	N/A	
Sewer Soil Pipe-PVC Plastic SFR 34 & 41-Cast Iron Soil Pipe no hub-service weight and extra heavy											
Nominal Pipe Size	4”				6”				8”		
Pipe O.D.	4.22 to 4.62				6.28 to 6.62				8.40 to 8.75		
Step of Boot Used	4				6				8		
Conduit EMT											
Nominal Pipe Size	¾”	1”	1 ¼”	1 ½”	2”	2 ½”	3”	3 ½”	4”		
Pipe O.D.	0.922	1.16	1.51	1.74	2.19	2.88	3.50	4.00	4.50		
Step of Boot Used	1	1	1	1 ½	2	3	3	4	4		
Conduit IMC											
Nominal Pipe Size	¾”	1”	1 ¼”	1 ½”	2”	2 ½”	3”	3 ½”	4”		
Pipe O.D.	1.02	1.29	1.63	1.88	2.36	2.85	3.47	3.97	4.46		
Step of Boot Used	1	1	1 ½	1 ½	2	3	3	4	4		
Conduit Rigid											
Nominal Pipe Size	¾”	1”	1 ¼”	1 ½”	2”	2 ½”	3”	3 ½”	4”	5”	
Pipe O.D.	1.05	1.32	1.66	1.90	2.37	2.87	3.50	4.00	4.50	5.56	
Step of Boot Used	1	1	1 ½	1 ½	2	3	3	4	4	5	

The information given on this PDS is subject to change without notice. Always check the Mule-Hide website at www.mulehide.com for the latest information, changes and updates or contact Mule-Hide Products Company at 800-786-1492.

DISCLAIMER

The statements provided concerning the material shown are intended as a guide for material usage and are believed to be true and accurate at the time of printing. No statement made by anyone may supersede this information, except when done in writing by Mule-Hide Products Co., Inc. Since the manner of use is beyond our control, Mule-Hide does not authorize anyone to make any warranty of merchantability or fitness for any particular purpose or any other warranty, guarantee or representation, expressed or implied, concerning this material. This product may be eligible for a Mule-Hide warranty, please check the Mule-Hide website at www.mulehide.com or contact Mule-Hide directly at 800-786-1492 for details. Buyer and user accept the product under these conditions and assume the risk of any failure, any injury person or property (including that of the user), loss or liability resulting from the handling, storage or use of the product whether or not it is handled, stored or used in accordance with the directions or specifications. Mule-Hide must be notified in writing of any claims and be given the opportunity to inspect the alleged failure before repairs are made.

Mule-Hide Products Co., Inc.
1195 Prince Hall Dr.
Beloit, WI 53511

PRODUCT DATA SHEET
PDS 09-4322
Revision Date: Feb-2014

MULE-HIDE PVC SPLIT PIPE SEALS

PRODUCT DESCRIPTION

PVC Split Pipe Seals are fabricated flashings made of 60-mil reinforced PVC-c membrane for pipes 1-inch (25.4 mm) to 6-inches (152.4 mm) in diameter. They are designed to add ease to the installation process while offering increased watertight security and improved aesthetics

BASIC USES

The PVC Split Pipe Seals contains a split (cut) and overlap tab that allows the pipe-boot to be opened and wrapped around a round pipe with an obstruction. Such obstructions prevent the use of a standard pre-molded pipe boot.

TYPICAL PHYSICAL PROPERTIES

Color:	White, Gray & Tan
Sizes Available:	1", 2", 3", 4", 5" and 6" O.D. Pipe (25.4, 50.8, 76.2, 101.6, 127.0 and 152.4 mm)
Weight per Carton:	8 lbs (3.6 kg)
Material:	Reinforced 60-mil PVC membrane
Packaging:	8 per carton

BENEFITS

- Offers substantial labor savings when compared to field fabricated flashings
- Provides a uniform, consistent appearance
- Simplifies the field installers job when flashing a pipe next to an obstruction
- Provides a reliable method of waterproofing round pipe penetrations

INSTALLATION INSTRUCTIONS

1. Clean the penetration to eliminate any rust or scale and wipe with a Splice Wipe saturated with Weathered Membrane Cleaner.
2. Confirm the outside diameter of the pipe. The nominal diameter of the Split Pipe Seal indicates the maximum size the part will effectively fit. Each Split Pipe Seal can accommodate a pipe that is 1-inch smaller in outside diameter. For example, a 2-inch Split Pipe Seal can be utilized to flash pipes ranging from 1-1/6” in diameter up to 2” in diameter.
3. Open the Split Pipe Seal and pulling apart the tack welds located on the vertical leg of the flashing.
4. Wrap the Slit Pipe Seal around the pipe until the vertical leg is tight against the outside diameter of the pipe penetration.
5. Mark the pipe around the top of the Split Pipe Seal.
6. Remove the Split Pipe Seal from around the pipe.
7. Install Water Cut-Off Mastic below the mark indicating the top of the installed Split Pipe Seal.
8. Wrap the Split Pipe Seal back around the penetration until the vertical leg is tight against the outside diameter of the pipe penetration.
9. Tack weld the back edge of the Split Pipe Seal vertical leg ensuring that good contact is maintained between the Split Pipe Seal and the pipe. This process will hold the Split Pipe Seal in place.
10. Heat-weld the entire width of the vertical overlap. Hand roll against the outer surface of the pipe to create the pressure necessary to achieve an acceptable weld.
11. Heat-weld the base flange to the deck membrane and complete the horizontal overlap weld.
12. Once the flashing has completely cooled, check all splices for voids and cold welds. Make any needed repairs.

MULE-HIDE PVC SPLIT PIPE SEALS

INSTALLATION INSTRUCTIONS (Continued)

13. Install a stainless steel universal clamping ring to provide constant compression of the sealant.
14. Apply Cut-Edge Sealant to all edges of the pipe-seal that are located on the horizontal plane. Do not apply the sealant to vertical surfaces.
    Refer to Mule-Hide Specifications and detail drawings for installation information.

PRECAUTIONS

1. All lead and other flashings must be removed prior to installation.
2. Temperature of pipe penetration must not exceed 160ºF (71ºC).
3. For mechanically attached systems, install a minimum of four fastening plates equally spaced around base of pipe projections. Plates must be completely covered by the flange of the Split Pipe Boot and allow for a minimum 1 ½" wide heat weld. If plates cannot be installed to allow a minimum 1 ½" wide heat weld, install the plated outside of the Split Pipe Seal flange and cover with a target patch of PVC field membrane with heat welded seams.

STORAGE & HANDLING

Store Split Pipe Seals in a cool, shaded area and cover with light-colored, breathable, waterproof tarpaulins. Mule-Hide PVC Split Pipe Seals or membrane that have been exposed to the weather prior to use must be prepared with Weathered Membrane Cleaner prior to hot air welding.

PROTECTION & SAFETY

Mule-Hide maintains Material Safety Data Sheets on all of its products. Material Safety Data Sheets contain health and safety information for your development of appropriate product handling procedures to protect your employees and customers. Mule-Hide's Material Safety Data Sheets should be read and understood by all of your supervisory personnel and employees before using Mule-Hide products in your facilities.

ADDITIONAL INFORMATION

The information given on this PDS is subject to change without notice. Always check the Mule-Hide website at www.mulehide.com for the latest information, changes and updates or contact Mule-Hide Products Company at 800-786-1492.

DISCLAIMER

The statements provided concerning the material shown are intended as a guide for material usage and are believed to be true and accurate at the time of printing. No statement made by anyone may supersede this information, except when done in writing by Mule-Hide Products Co., Inc. Since the manner of use is beyond our control, Mule-Hide does not authorize anyone to make any warranty of merchantability or fitness for any particular purpose or any other warranty, guarantee or representation, expressed or implied, concerning this material. This product may be eligible for a Mule-Hide warranty, please check the Mule-Hide website at www.mulehide.com or contact Mule-Hide directly at 800-786-1492 for details. Buyer and user accept the product under these conditions and assume the risk of any failure, any injury person or property (including that of the user), loss or liability resulting from the handling, storage or use of the product whether or not it is handled, stored or used in accordance with the directions or specifications. Mule-Hide must be notified in writing of any claims and be given the opportunity to inspect the alleged failure before repairs are made.

Mule-Hide Products Co., Inc.
1195 Prince Hall Dr.
Beloit, WI 53511

PRODUCT DATA SHEET
PDS 09-4327
Revision Date: Feb-2014

MULE-HIDE PVC SQUARE TUBING WRAP

PRODUCT DESCRIPTION

PVC Square Tubing Wraps are fabricated square penetration flashings made of white, gray or tan 60 mil reinforced PVC membrane. Overall height of the flashings is 11 inches. A split (cut) and overlap tab are incorporated into these parts to allow the flashings to be opened and wrapped around a square penetration with an obstruction. PVC Square Tubing Wraps are packaged in boxes of eight.

BASIC USES

The Mule-Hide PVC Square Tubing Wraps are primarily used to seal details where field fabrication is necessary, such as drain details, pipe flashings and pitch pocket flashings.

TYPICAL PHYSICAL PROPERTIES

Typical Properties and Characteristics*	
Sizes	3” x 3” (76 mm x 76 mm)
	4” x 4” (102 mm x 102 mm)
	6” x 6” (152 mm x 152 mm)
Thickness	60 mil PVC membrane
Color	White, Gray & Tan

LEED Information	
Pre-Consumer Recycled Content	0%
Post-Consumer Recycled Content	0%
Manufacturing Location	Eugene, OR
Solar Reflective Index (SRI)	N/A

PACKAGING

8 per carton – 8lbs per carton

BENEFITS & SUPPLEMENTAL STATEMENTS

- Offers substantial labor savings compared to field fabricated flashings
- Reliable method of waterproofing square tubing penetrations
- Provides a more consistent professional appearance compared to field fabricated flashings

INSTALLATION INSTRUCTIONS

1. Clean the penetration to eliminate any rust or scale and wipe with a Splice Wipe saturated with Weathered Membrane Cleaner.
2. Open the Square Tubing Wrap and pull apart the tack welds located on the vertical leg of the flashing.
3. Wrap the Square Tubing Wrap around the penetration until the vertical leg is tight against the penetration.
4. Mark the penetration ¼” above the top of the Square Tubing Wrap.
5. Remove the PVC Square Tubing Wrap from around the penetration.
6. Prime a 3"-wide area of the tubing directly below the previously made mark as well as the corresponding area of the Square Tube Wrap with Tape Primer.
7. Wrap a piece of 3"-wide In-Seam Tape (included in the box) around the penetration at the mark made previously. The In-seam Tape should overlap approximately 1".
8. Wrap the PVC Square Tubing Wrap around the penetration until the vertical leg is tight against the penetration. Use a 2" roller to roll the membrane into the In-Seam Tape.
9. Tack-weld the back edge of the PVC Square Tubing Wrap’s vertical leg, ensuring that good contact is maintained between the tubing wrap and the penetration. This process will hold the PVC Square Tubing Wrap in place.

MULE-HIDE PVC SQUARE TUBING WRAP

INSTALLATION INSTRUCTIONS (Continued)

10. Heat-weld the entire width of the vertical overlap. Hand roll against the outer surface of the penetration to create the pressure necessary to achieve an acceptable weld.
11. Heat-weld the base flange to the deck membrane and complete the horizontal overlap weld.
12. Once the flashing has completely cooled, check all splices for voids and cold-welds. Make any needed repairs.
13. Apply a bead of Universal Single-Ply Sealant at the top of the tubing wrap.
14. Apply Cut-Edge Sealant to all edges of the Square Tubing Wrap that are located on the deck. Do not apply the sealant to vertical surfaces.
    Review Mule-Hide specifications and details for installation information.

PRECAUTIONS

1. All lead and other flashings must be removed prior to installation.
2. Temperature of penetration must not exceed 160ºF (71ºC).
3. For mechanically attached systems, install a minimum of four fastening plates equally spaced around base of pipe projections. Plates must be completely covered by the flange of the Split Pipe Boot and allow for a minimum 1 ½" wide heat weld. If plates cannot be installed to allow a minimum 1 ½" wide heat weld, install the plated outside of the Split Pipe Seal flange and cover with a target patch of PVC field membrane with heat welded seams.

STORAGE & HANDLING

Store PVC Square Tubing Wraps in a cool, shaded area and cover with light-colored, breathable, waterproof tarpaulins. Mule-Hide PVC Square Tubing Wraps or membrane that have been exposed to the weather prior to use must be prepared with Weathered Membrane Cleaner prior to hot air welding.

PROTECTION & SAFETY

Mule-Hide maintains Material Safety Data Sheets on all of its products. Material Safety Data Sheets contain health and safety information for your development of appropriate product handling procedures to protect your employees and customers. Mule-Hide's Material Safety Data Sheets should be read and understood by all of your supervisory personnel and employees before using Mule-Hide products in your facilities.

ADDITIONAL INFORMATION

The information given on this PDS is subject to change without notice. Always check the Mule-Hide website at www.mulehide.com for the latest information, changes and updates or contact Mule-Hide Products Company at 800-786-1492.

DISCLAIMER

The statements provided concerning the material shown are intended as a guide for material usage and are believed to be true and accurate at the time of printing. No statement made by anyone may supersede this information, except when done in writing by Mule-Hide Products Co., Inc. Since the manner of use is beyond our control, Mule-Hide does not authorize anyone to make any warranty of merchantability or fitness for any particular purpose or any other warranty, guarantee or representation, expressed or implied, concerning this material. This product may be eligible for a Mule-Hide warranty, please check the Mule-Hide website at www.mulehide.com or contact Mule-Hide directly at 800-786-1492 for details. Buyer and user accept the product under these conditions and assume the risk of any failure, any injury person or property (including that of the user), loss or liability resulting from the handling, storage or use of the product whether or not it is handled, stored or used in accordance with the directions or specifications. Mule-Hide must be notified in writing of any claims and be given the opportunity to inspect the alleged failure before repairs are made.

Mule-Hide Products Co., Inc.
1195 Prince Hall Dr.
Beloit, WI 53511

PRODUCT DATA SHEET
PDS 09-4510
Revision Date: Feb-2014

MULE-HIDE PVC T-JOINT COVER

PRODUCT DESCRIPTION

PVC T-Joint Covers are made from 60-mil non-reinforced White, and 40-mil Gray and Tan, cut into a 4.5" diameter circle.

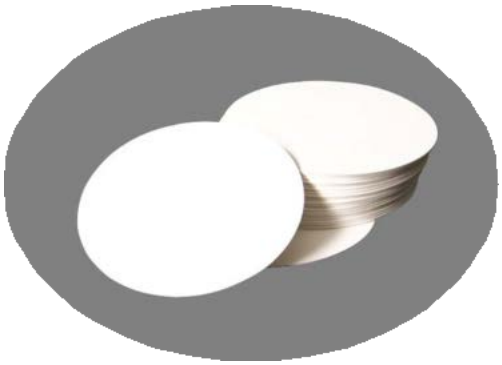

BASIC USES

PVC T-Joint Covers are used to seal step-offs at splice intersections. Installation is mandatory on all 60-mil and 80-mil PVC systems and on 50-mil systems where step-offs have not been properly sealed.

TYPICAL PHYSICAL PROPERTIES

Typical Properties and Characteristics*	
Material	Non-reinforced PVC
Size	4.5" (114 mm) diameter
Thickness	60-mil (1.5 mm)
Packaging	100 per box
Weight	3.5 lbs (1.6 kg) per box
Color	White, Gray and Tan

*Typical properties and characteristics are based on samples tested and are not guaranteed for all samples of this product. This data and information is intended as a guide and does not reflect the specification range for any particular property of this product.

BENEFITS

- More consistent performance compared to hand cutting
- Every T-Joint Patch is a perfect 4.5" diameter circle
- Offers labor savings compared to hand cut flashings
- Seals channels at splice intersections created by seam step-offs

INSTALLATION INSTRUCTIONS

1. If membrane has been exposed to the weather, clean splice intersection area with Weathered Membrane Cleaner.
2. Use a lower temperature setting on the hand heat welder than that used for welding reinforced PVC membrane. (Typically a setting of "6" on a scale of "10" is appropriate for welding PVC T-Joint Covers.)
3. Center the T-Joint Cover over the splice intersection, begin welding at the center point and work towards the outside. Use the edge of the roller to crease the T-Joint cover into membrane step-offs to achieve a proper seal.
4. Using a probe, check all splices for voids and cold welds only once the T-Joint Cover has completely cooled. Make any needed repairs.
   Review Mule-Hide specifications and details for complete installation information.

PRECAUTIONS

1. Do not use PVC T-Joint Cover to overlay fasteners and plates.
2. Reinforced membrane is required to overlay fasteners and plates...

MULE-HIDE PVC T-JOINT COVER

STORAGE & HANDLING

1. Store T-Joint Covers in a cool, shaded area and cover with light-colored, breathable, waterproof tarpaulins.
2. T-Joint Covers that have been exposed to the weather must be prepared with Weathered Membrane Cleaner before hot-air welding.

PROTECTION & SAFETY

Mule-Hide maintains Material Safety Data Sheets on all of its products. Material Safety Data Sheets contain health and safety information for your development of appropriate product handling procedures to protect your employees and customers. Mule-Hide's Material Safety Data Sheets should be read and understood by all of your supervisory personnel and employees before using Mule-Hide products in your facilities.

ADDITIONAL INFORMATION

The information given on this PDS is subject to change without notice. Always check the Mule-Hide website at www.mulehide.com for the latest information, changes and updates or contact Mule-Hide Products Company at 800-786-1492.

DISCLAIMER

The statements provided concerning the material shown are intended as a guide for material usage and are believed to be true and accurate at the time of printing. No statement made by anyone may supersede this information, except when done in writing by Mule-Hide Products Co., Inc. Since the manner of use is beyond our control, Mule-Hide does not authorize anyone to make any warranty of merchantability or fitness for any particular purpose or any other warranty, guarantee or representation, expressed or implied, concerning this material. This product may be eligible for a Mule-Hide warranty, please check the Mule-Hide website at www.mulehide.com or contact Mule-Hide directly at 800-786-1492 for details. Buyer and user accept the product under these conditions and assume the risk of any failure, any injury person or property (including that of the user), loss or liability resulting from the handling, storage or use of the product whether or not it is handled, stored or used in accordance with the directions or specifications. Mule-Hide must be notified in writing of any claims and be given the opportunity to inspect the alleged failure before repairs are made.

Mule-Hide Products Co., Inc.
1195 Prince Hall Dr.
Beloit, WI 53511

PRODUCT DATA SHEET
PDS 09-4550
Revision Date: Feb-2014

MULE-HIDE PVC UNIVERSAL CORNERS

PRODUCT DESCRIPTION

Mule-Hide PVC Universal Corners are pre-molded from non-reinforced thermoplastic poly vinyl chloride material.

BASIC USES

They are uniform in shape and size and provide water tightness at corners formed by PVC coated metal and flashing membrane. They provide a neat, finished look to building corners, curbs and parapet flashings with no cutting or stretching required.

SPECIFICATIONS

Colors:	White, Gray (special order)
Thickness:	.060" (1.52mm) thick molded material

PACKAGING

Packaged 20 units per carton

BENEFITS

- More consistent performance compared to hand cutting
- Every Universal Corner is consistent in size
- Offers labor savings compared to hand cut flashings

INSTALLATION INSTRUCTIONS

1. If membrane has been exposed to the weather, clean splice intersection area with Weathered Membrane Cleaner.
2. Use a lower temperature setting on the hand heat welder than that used for welding reinforced PVC membrane.
3. Mule-Hide PVC Universal Corners must be installed by heat welding. Refer to Mule-Hide Details published in the Mule-Hide PVC Specification Manual. Do not use adhesive to install.
4. Using a probe, check all splices for voids and cold welds only once the PVC Universal corner has completely cooled. Make any needed repairs.
   Review Mule-Hide specifications and details for complete installation information.

STORAGE

Corners should be stored in a clean, dry area and protected from extreme temperatures.

PROTECTION & SAFETY

Mule-Hide maintains Material Safety Data Sheets on all of its products. Material Safety Data Sheets contain health and safety information for your development of appropriate product handling procedures to protect your employees and customers. Mule-Hide's Material Safety Data Sheets should be read and understood by all of your supervisory personnel and employees before using Mule-Hide products in your facilities.

MULE-HIDE PVC UNIVERSAL CORNERS

ADDITIONAL INFORMATION

The information given on this PDS is subject to change without notice. Always check the Mule-Hide website at www.mulehide.com for the latest information, changes and updates or contact Mule-Hide Products Company at 800-786-1492.

DISCLAIMER

The statements provided concerning the material shown are intended as a guide for material usage and are believed to be true and accurate at the time of printing. No statement made by anyone may supersede this information, except when done in writing by Mule-Hide Products Co., Inc. Since the manner of use is beyond our control, Mule-Hide does not authorize anyone to make any warranty of merchantability or fitness for any particular purpose or any other warranty, guarantee or representation, expressed or implied, concerning this material. This product may be eligible for a Mule-Hide warranty, please check the Mule-Hide website at www.mulehide.com or contact Mule-Hide directly at 800-786-1492 for details. Buyer and user accept the product under these conditions and assume the risk of any failure, any injury person or property (including that of the user), loss or liability resulting from the handling, storage or use of the product whether or not it is handled, stored or used in accordance with the directions or specifications. Mule-Hide must be notified in writing of any claims and be given the opportunity to inspect the alleged failure before repairs are made.

Mule-Hide Products Co., Inc.
1195 Prince Hall Dr.
Beloit, WI 53511

PRODUCT DATA SHEET
PDS 09-4555
Revision Date: Feb-2014

MULE-HIDE PVC INSIDE CORNERS

PRODUCT DESCRIPTION

Mule-Hide PVC Inside Corners are pre-molded from non-reinforced PVC (polyolefin) membrane.

BASIC USES

Mule-Hide PVC Inside Corners are uniform in shape and size and provide water tightness at inside corners formed by PVC coated metal and/or PVC flashing membrane. They provide a neat, finished look to building corners, curbs and parapet flashings with no cutting required.

TYPICAL PHYSICAL PROPERTIES

Color:	White, Gray & Tan
Material:	Non-reinforced PVC
Thickness:	.060" (1.52mm) thick molded material
Packaging:	12 pieces per bag

*Typical properties and characteristics are based on samples tested and are not guaranteed for all samples of this product. This data and information is intended as a guide and does not reflect the specification range for any particular property of this product.

BENEFITS

- More consistent performance compared to hand cutting
- Forms easily to flash “out of square” corners that are not exactly 90 degrees
- Offers labor savings compared to hand cut flashings

INSTALLATION INSTRUCTIONS

1. If membrane has been exposed to the weather, clean splice intersection area with Weathered Membrane Cleaner.
2. Use a lower temperature setting on the hand heat welder than that used for welding reinforced PVC membrane.
3. Position PVC Inside Corner into the building corner and begin welding at the innermost corner point and work away from the corner.
4. Use the roller edge to crease the corner flashing into any membrane step-off to create a proper seal.
5. Using a probe, check all splices for voids and cold welds only once the PVC Inside corner has completely cooled. Make any needed repairs.
   Review Mule-Hide specifications and details for complete installation information.

STORAGE

Corners should be stored in a clean, dry area and protected from extreme temperatures.

PROTECTION & SAFETY

Mule-Hide maintains Material Safety Data Sheets on all of its products. Material Safety Data Sheets contain health and safety information for your development of appropriate product handling procedures to protect your employees and customers. Mule-Hide's Material Safety Data Sheets should be read and understood by all of your supervisory personnel and employees before using Mule-Hide products in your facilities.

MULE-HIDE PVC INSIDE CORNERS

ADDITIONAL INFORMATION

The information given on this PDS is subject to change without notice. Always check the Mule-Hide website at www.mulehide.com for the latest information, changes and updates or contact Mule-Hide Products Company at 800-786-1492.

DISCLAIMER

The statements provided concerning the material shown are intended as a guide for material usage and are believed to be true and accurate at the time of printing. No statement made by anyone may supersede this information, except when done in writing by Mule-Hide Products Co., Inc. Since the manner of use is beyond our control, Mule-Hide does not authorize anyone to make any warranty of merchantability or fitness for any particular purpose or any other warranty, guarantee or representation, expressed or implied, concerning this material. This product may be eligible for a Mule-Hide warranty, please check the Mule-Hide website at www.mulehide.com or contact Mule-Hide directly at 800-786-1492 for details. Buyer and user accept the product under these conditions and assume the risk of any failure, any injury person or property (including that of the user), loss or liability resulting from the handling, storage or use of the product whether or not it is handled, stored or used in accordance with the directions or specifications. Mule-Hide must be notified in writing of any claims and be given the opportunity to inspect the alleged failure before repairs are made.

Mule-Hide Products Co., Inc.
1195 Prince Hall Dr.
Beloit, WI 53511

PRODUCT DATA SHEET
PDS 09-4547
Revision Date: Feb-2014

MULE-HIDE PVC OUTSIDE CORNERS

PRODUCT DESCRIPTION

Mule-Hide PVC Outside Corners are pre-molded from non-reinforced PVC (polyolefin) membrane.

BASIC USES

Mule-Hide PVC Outside Corners are uniform in shape and size and provide water tightness at Outside corners formed by PVC coated metal and/or PVC flashing membrane. They provide a neat, finished look to building corners, curbs and parapet flashings with no cutting required.

TYPICAL PHYSICAL PROPERTIES

Color:	White, Gray & Tan
Material:	Non-reinforced PVC
Thickness:	.060" (1.52mm) thick molded material
Packaging:	12 pieces per bag

*Typical properties and characteristics are based on samples tested and are not guaranteed for all samples of this product. This data and information is intended as a guide and does not reflect the specification range for any particular property of this product.

BENEFITS

- More consistent performance compared to hand cutting
- Forms easily to flash “out of square” outside corners that are not exactly 90 degrees
- Offers labor savings compared to hand cut flashings

INSTALLATION INSTRUCTIONS

1. If membrane has been exposed to the weather, clean splice intersection area with Weathered Membrane Cleaner.
2. Use a lower temperature setting on the hand heat welder than that used for welding reinforced PVC membrane.
3. Position PVC Outside Corner into the building corner and begin welding at the innermost corner point and work away from the corner.
4. Use the roller edge to crease the corner flashing into any membrane step-off to create a proper seal.
5. Using a probe, check all splices for voids and cold welds only once the PVC Outside corner has completely cooled. Make any needed repairs.
   Review Mule-Hide specifications and details for complete installation information.

STORAGE

Corners should be stored in a clean, dry area and protected from extreme temperatures.

PROTECTION & SAFETY

Mule-Hide maintains Material Safety Data Sheets on all of its products. Material Safety Data Sheets contain health and safety information for your development of appropriate product handling procedures to protect your employees and customers. Mule-Hide's Material Safety Data Sheets should be read and understood by all of your supervisory personnel and employees before using Mule-Hide products in your facilities.

MULE-HIDE PVC OUTSIDE CORNERS

ADDITIONAL INFORMATION

The information given on this PDS is subject to change without notice. Always check the Mule-Hide website at www.mulehide.com for the latest information, changes and updates or contact Mule-Hide Products Company at 800-786-1492.

DISCLAIMER

The statements provided concerning the material shown are intended as a guide for material usage and are believed to be true and accurate at the time of printing. No statement made by anyone may supersede this information, except when done in writing by Mule-Hide Products Co., Inc. Since the manner of use is beyond our control, Mule-Hide does not authorize anyone to make any warranty of merchantability or fitness for any particular purpose or any other warranty, guarantee or representation, expressed or implied, concerning this material. This product may be eligible for a Mule-Hide warranty, please check the Mule-Hide website at www.mulehide.com or contact Mule-Hide directly at 800-786-1492 for details. Buyer and user accept the product under these conditions and assume the risk of any failure, any injury person or property (including that of the user), loss or liability resulting from the handling, storage or use of the product whether or not it is handled, stored or used in accordance with the directions or specifications. Mule-Hide must be notified in writing of any claims and be given the opportunity to inspect the alleged failure before repairs are made.

Mule-Hide Products Co., Inc.
1195 Prince Hall Dr.
Beloit, WI 53511

PRODUCT DATA SHEET
PDS 09-5110
Revision Date: Oct-2013

MULE-HIDE 2.4" SEAM PLATES

PRODUCT DESCRIPTION

Mule-Hide's 2.4" Seam Plates are round Galvalume coated metal plates with (14) barbed anchors and reinforcing ribs for superior wind uplift resistance

BASIC USES

Mule-Hide's 2.4" Seam Plates are designed for the mechanical attachment of the Mule-Hide Reinforced EPDM, PVC and TPO membranes. The 2.4" Seam Plates are attached with Mule-Hide HDP Fasteners or EHD Fasteners. In addition to securing mechanically attached reinforced membranes, our 2.4" Seam Plates can be used with our reinforced 6" wide RMS, or our 6" wide and 10" wide RUSS™ Strips.

SPECIFICATIONS

Material:	20 ga. Galvalume coated metal
Coating:	Galvalume AZ 55 meeting ASTM A 792 Grade 50A
Corrosion:	Meets FM corrosion standard 4470
Pull Thru:	Flat truss head pulled through the center hole of the plate, minimum pull thru: 800 lbs.

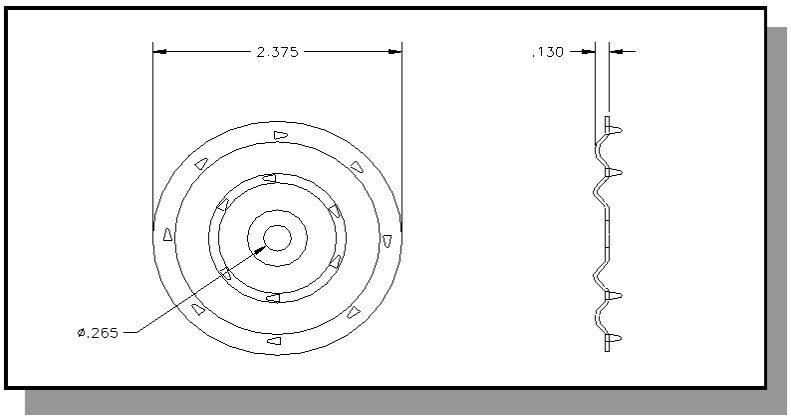

CODE APPROVALS/COMPLIANCE

Mule-Hide HDP Fasteners comply with the requirements of the following specifications, test and code requirements when properly installed.

* FM Standard 4450/4470 Approval * Metro-Dade Approved *Florida Product Approval

PACKAGING

Packaged in cartons of 1,000, approximate weight is 40# per box.

INSTALLATION INSTRUCTIONS

Install Mule-Hide 2.4" Seam Plates with barbs facing toward membrane (see appropriate detail drawing).
Secure 2.4" Seam Plate with Mule-Hide HDP or EHD fasteners in to substrate.
Use eye protection when installing fasteners.

MULE-HIDE 2.4" SEAM PLATES

PROTECTION & SAFETY

Mule-Hide maintains Material Safety Data Sheets on all of its products. Material Safety Data Sheets contain health and safety information for your development of appropriate product handling procedures to protect your employees and customers. Mule-Hide's Material Safety Data Sheets should be read and understood by all of your supervisory personnel and employees before using Mule-Hide products in your facilities.

LEED INFORMATION

Recycled Content

Postconsumer (1)	40%
Preconsumer (2)	18%
Total Recycled Content (3)	58%
LEED – Eligible Recycled Content (4)	49%

(1) Postconsumer material is defined as waste material generated by households or commercial, industrial and institutional facilities in their role as end-users of the product, which can no longer be used for its intended purposes.
(2) Preconsumer material is defined as material diverted from the waste stream during the manufacturing process. Reutilization of materials (i.e. rework, regrind or scrap generated in a process and capable of being reclaimed within the same process that generated it) is excluded.
(3) Total Recycled Content = Postconsumer Content + Preconsumer Content.
(4) LEED-Eligible Recycled Content = Postconsumer + ½ Preconsumer Content (per LEED Standard). Recycled content value is determined by weight.

ADDITIONAL INFORMATION

The information given on this PDS is subject to change without notice. Always check the Mule-Hide website at www.mulehide.com for the latest information, changes and updates or contact Mule-Hide Products Company at 800-786-1492.

DISCLAIMER

The statements provided concerning the material shown are intended as a guide for material usage and are believed to be true and accurate at the time of printing. No statement made by anyone may supersede this information, except when done in writing by Mule-Hide Products Co., Inc. Since the manner of use is beyond our control, Mule-Hide does not authorize anyone to make any warranty of merchantability or fitness for any particular purpose or any other warranty, guarantee or representation, expressed or implied, concerning this material. This product may be eligible for a Mule-Hide warranty, please check the Mule-Hide website at www.mulehide.com or contact Mule-Hide directly at 800-786-1492 for details. Buyer and user accept the product under these conditions and assume the risk of any failure, any injury person or property (including that of the user), loss or liability resulting from the handling, storage or use of the product whether or not it is handled, stored or used in accordance with the directions or specifications. Mule-Hide must be notified in writing of any claims and be given the opportunity to inspect the alleged failure before repairs are made.

Mule-Hide Products Co., Inc.
1195 Prince Hall Dr.
Beloit, WI 53511

MULE-HIDE 3” INSULATION PLATES

PRODUCT DESCRIPTION

Mule-Hide ‘s 3” Insulation Plates are round Galvalume coated metal plates with reinforcing ribs for superior wind uplift resistance

BASIC USES

Mule-Hide's 3” Insulation Plates are designed specifically for the mechanical attachment of Mule-Hide’s Poly ISO 1 and Poly ISO 2 insulation and other FM Approved insulation / cover boards.

SPECIFICATIONS

Material: 26 ga. Galvalume coated metal
Coating: Galvalume AZ 50 meeting ASTM A 792 Grade 50A
Corrosion: Meets FM corrosion standard 4470

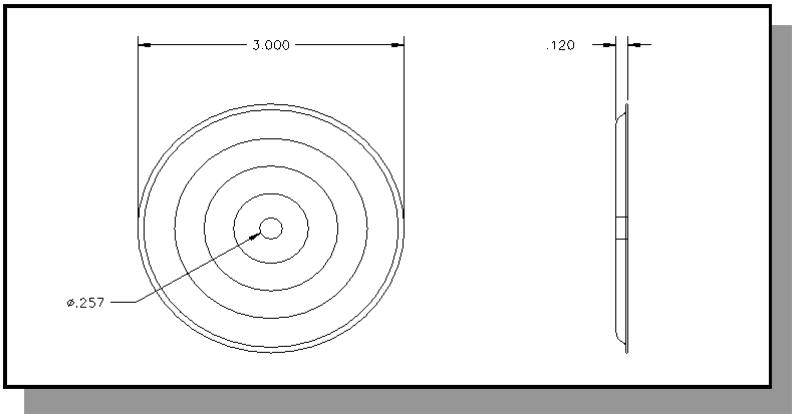

CODE APPROVALS/COMPLIANCE

Mule-Hide HDP Fasteners comply with the requirements of the following specifications, test and code requirements when properly installed.

* FM Standard 4450/4470 Approval * Metro-Dade Approved *Florida Product Approval

PACKAGING

Packaged in cartons of 1,000, approximate weight is 40# per box.

INSTALLATION INSTRUCTIONS

Install Mule-Hide 3” Insulation Plates with head indentation facing upward.
Secure 2.4” Seam Plate with Mule-Hide HDP or EHD fasteners in to substrate.
Use eye protection when installing fasteners.

MULE-HIDE 3" INSULATION PLATES

PROTECTION & SAFETY

Mule-Hide maintains Material Safety Data Sheets on all of its products. Material Safety Data Sheets contain health and safety information for your development of appropriate product handling procedures to protect your employees and customers. Mule-Hide's Material Safety Data Sheets should be read and understood by all of your supervisory personnel and employees before using Mule-Hide products in your facilities.

LEED INFORMATION

Recycled Content

Postconsumer (1)	40%
Preconsumer (2)	18%
Total Recycled Content (3)	58%
LEED – Eligible Recycled Content (4)	49%

(1) Postconsumer material is defined as waste material generated by households or commercial, industrial and institutional facilities in their role as end-users of the product, which can no longer be used for its intended purposes.
(2) Preconsumer material is defined as material diverted from the waste stream during the manufacturing process. Reutilization of materials (i.e. rework, regrind or scrap generated in a process and capable of being reclaimed within the same process that generated it) is excluded.
(3) Total Recycled Content = Postconsumer Content + Preconsumer Content.
(4) LEED-Eligible Recycled Content = Postconsumer + ½ Preconsumer Content (per LEED Standard). Recycled content value is determined by weight.

ADDITIONAL INFORMATION

The information given on this PDS is subject to change without notice. Always check the Mule-Hide website at www.mulehide.com for the latest information, changes and updates or contact Mule-Hide Products Company at 800-786-1492.

DISCLAIMER

The statements provided concerning the material shown are intended as a guide for material usage and are believed to be true and accurate at the time of printing. No statement made by anyone may supersede this information, except when done in writing by Mule-Hide Products Co., Inc. Since the manner of use is beyond our control, Mule-Hide does not authorize anyone to make any warranty of merchantability or fitness for any particular purpose or any other warranty, guarantee or representation, expressed or implied, concerning this material. This product may be eligible for a Mule-Hide warranty, please check the Mule-Hide website at www.mulehide.com or contact Mule-Hide directly at 800-786-1492 for details. Buyer and user accept the product under these conditions and assume the risk of any failure, any injury person or property (including that of the user), loss or liability resulting from the handling, storage or use of the product whether or not it is handled, stored or used in accordance with the directions or specifications. Mule-Hide must be notified in writing of any claims and be given the opportunity to inspect the alleged failure before repairs are made.

Mule-Hide Products Co., Inc.
1195 Prince Hall Dr.
Beloit, WI 53511

PRODUCT DATA SHEET
PDS 09-5220
Revision Date: OCT-2013

MULE-HIDE DRILL POINT FASTENERS

PRODUCT DESCRIPTION

Mule-Hide Drill Point Fasteners are # 12 fasteners manufactured from C-1022 heat treated wire. These fasteners incorporate a No. 3 Phillips recess, flat truss head with a #2 double flute self-drilling point. The drill point has an exclusive tapered entry thread design that allows for fastener penetration into steel roof decks and offers exceptional back-out resistance.

BASIC USES

Mule-Hide's Drill Point Fasteners are designed specifically for the mechanical attachment of Mule-Hide's Poly ISO 1 and Poly ISO 2 roof insulation boards and other FM approved insulation / cover boards into steel and wood decks. The Mule-Hide Drill Point Fasteners may be used in conjunction with the Mule-Hide 3" Insulation Plates. Refer to Mule-Hide's appropriate Single-Ply Manuals for installation instructions and uses.

SPECIFICATIONS

Wire:	---	SAE C-1022, heat treated wire
Coating:	---	TRU-Kote PC-3
Corrosion Resistance	FM 4470, DIN 50018	<15% Red Rust after 30 cycles
Tensile Strength	ASTM F606-10	2500 lb.
Shear Strength	NASM 1312-20	1900 lb. (thread zone)

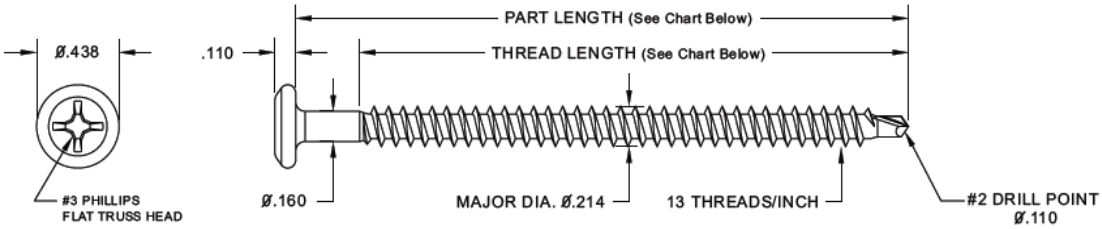

PACKAGING

Screw Length*	Thread Length*	Pieces/Box	Weight/Box
1-5/8"	1-5/8"	1000	11.8 lbs
2-1/4"	2-1/4"	1000	16.2 lbs
2-7/8'	2-7/8"	1000	19.7 lbs
3-1/4"	2-7/8"	1000	21.5 lbs
3-3/4"	2-7/8"	1000	24.6 lbs
4-1/2"	3-7/8"	1000	28.8 lbs
5"	3-7/8"	1000	31.5lbs
6"	3-7/8"	1000	37.1 lbs
7"	3-7/8"	500	20.9 lbs
8"	3-7/8"	500	23.9 lbs
Screw Length and Thread Length are ± 1/16"			

PERFORMANCE INFORMTION

Average Ultimate Pullout Values in Corrugated Steel Deck Substrates													
Thickness	24 ga.	22 ga.			20 ga.			18 ga.			16 ga.		
Strength, ksi	36.5	33.0	80.0	102.0	33.0	80.0	102.0	33.0	80.0	102.0	33.0	80.0	102.0
Pullout (lbs)	230	285	410	465	355	505	580	540	715	800	710	1000	1142

MULE-HIDE DRILL POINT FASTENERS

PERFORMANCE INFORMATION (continued)

Average Ultimate Pullout Values in Wood Substrates								
Type	APA Rated OSB				APA Rated Plywood			
Thickness	7/16”	15/32”	19/32”	23/32”	15/32”	19/32”	23/32”	SPF #2
Pullout (lbs)	265	300	325	440	365	475	720	700*

*lbf./in. of thread penetration including tip.

Pull out values are offered only as a guide and are not guaranteed in any way.
Designated holding powers are dependent upon quality of substrate and accuracy of installation.
Mule-Hide recommends that fastener pull out testing be performed to verify fastener performance.

CODE APPROVALS/COMPLIANCE

Mule-Hide Drill Point Fasteners comply with the requirements of the following specifications, test and code requirements when properly installed.

* FM Standard 4450/4470 Approval * Metro-Dade Approved *Florida Product Approval

INSTALLATION INSTRUCTIONS

Steel and Wood Decks
Install fasteners with #3 Phillips drive bit provided in box and a variable speed screw gun. Fastener must penetrate the deck a minimum of ¾” as measured from the underside of the roof deck to the fastener tip. Ensure that fastener is installed perpendicular to surface of roof deck. Care should be taken to not overdrive the fastener causing damage to roof insulation, fastener or roof deck.

Use eye protection when installing fasteners.

PROTECTION & SAFETY

Mule-Hide maintains Material Safety Data Sheets on all of its products. Material Safety Data Sheets contain health and safety information for your development of appropriate product handling procedures to protect your employees and customers. Mule-Hide's Material Safety Data Sheets should be read and understood by all of your supervisory personnel and employees before using Mule-Hide products in your facilities.

LEED INFORMATION

Recycled Content

Postconsumer (1)	15%
Preconsumer (2)	10%
Total Recycled Content (3)	25%
LEED – Eligible Recycled Content (4)	20%

(1) Postconsumer material is defined as waste material generated by households or commercial, industrial and institutional facilities in their role as end-users of the product, which can no longer be used for its intended purposes.
(2) Preconsumer material is defined as material diverted from the waste stream during the manufacturing process. Reutilization of materials (i.e. rework, regrind or scrap generated in a process and capable of being reclaimed within the same process that generated it) is excluded.
(3) Total Recycled Content = Postconsumer Content + Preconsumer Content.
(4) LEED-Eligible Recycled Content = Postconsumer + ½ Preconsumer Content (per LEED Standard). Recycled content value is determined by weight.

MULE-HIDE DRILL POINT FASTENERS

ADDITIONAL INFORMATION

The information given on this PDS is subject to change without notice. Always check the Mule-Hide website at www.mulehide.com for the latest information, changes and updates or contact Mule-Hide Products Company at 800-786-1492.

DISCLAIMER

The statements provided concerning the material shown are intended as a guide for material usage and are believed to be true and accurate at the time of printing. No statement made by anyone may supersede this information, except when done in writing by Mule-Hide Products Co., Inc. Since the manner of use is beyond our control, Mule-Hide does not authorize anyone to make any warranty of merchantability or fitness for any particular purpose or any other warranty, guarantee or representation, expressed or implied, concerning this material. This product may be eligible for a Mule-Hide warranty, please check the Mule-Hide website at www.mulehide.com or contact Mule-Hide directly at 800-786-1492 for details. Buyer and user accept the product under these conditions and assume the risk of any failure, any injury person or property (including that of the user), loss or liability resulting from the handling, storage or use of the product whether or not it is handled, stored or used in accordance with the directions or specifications. Mule-Hide must be notified in writing of any claims and be given the opportunity to inspect the alleged failure before repairs are made.

Mule-Hide Products Co., Inc.
1195 Prince Hall Dr.
Beloit, WI 53511

MULE-HIDE HDP FASTENERS

PRODUCT DESCRIPTION

Mule-Hide HDP fasteners (Heavy Duty) are # 14 fasteners manufactured from C-1022 heat treated wire. These fasteners incorporate a No. 3 Phillips recess, flat truss head with a #2 double flute self-drilling point. The drill point has an exclusive tapered entry thread design that allows for fastener penetration into steel roof decks and offers exceptional back-out resistance.

BASIC USES

Mule-Hide's HDP Fasteners are designed specifically for the mechanical attachment of Mule-Hide's reinforced EPDM, TPO and PVC membranes and for the mechanical attachment of Poly ISO 1 and Poly ISO 2 roof insulation boards and other FM approved insulation / cover boards into steel, wood and concrete decks. The Mule-Hide HDP Fasteners may be used in conjunction with the Mule-Hide 2.4" Seam Plates, 3" Insulation Plates and All Purpose Bars. Refer to Mule-Hide's appropriate Single-Ply Manuals for installation instructions and uses.

SPECIFICATIONS

Wire:	---	SAE C-1022, heat treated wire
Coating:	---	TRU-Kote PC-3
Corrosion Resistance	FM 4470, DIN 50018	<15% Red Rust after 30 cycles
Tensile Strength	ASTM F606-10	3200 lb.
Shear Strength	NASM 1312-20	2200 lb. (thread zone)

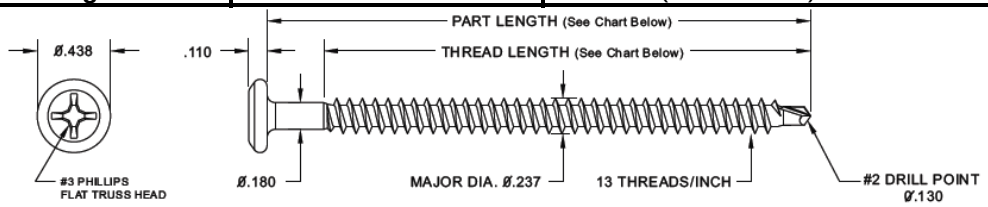

PACKAGING

Screw Length*	Thread Length*	Pieces/Box	Weight/Box
1-1/2"	1-1/2"	1000	12.9 lbs
2"	2"	1000	15.5 lbs
2-1/2"	2-1/2"	1000	19.4 lbs
3"	2-7/8"	1000	23.7 lbs
3-1/2"	2-7/8"	1000	26.4 lbs
4"	3-7/8"	1000	30.9 lbs
4-1/2"	3-7/8"	1000	33.6 lbs
5"	3-7/8"	1000	37.3 lbs
5-1/2"	3-7/8"	1000	40.8 lbs
6"	3-7/8"	1000	44.0 lbs
7"	3-7/8"	500	25.9 lbs
8"	3-7/8"	500	29.7 lbs
9"	3-7/8"	250	16.6 lbs
10"	3-7/8"	250	18.5 lbs
11"	3-7/8"	250	20.1 lbs
12"	3-7/8"	250	22.0 lbs

Notes: Screw Length is ± 1/16"
Thread Length is ± 1/16"

MULE-HIDE HDP FASTENERS

Performance Information

Average Ultimate Pullout Values in Corrugated Steel Deck Substrates													
Thickness	24 ga.	22 ga.			20 ga.			18 ga.			16 ga.		
Strength, ksi	36.5	33.0	80.0	102.0	33.0	80.0	102.0	33.0	80.0	102.0	33.0	80.0	102.0
Pullout (lbs)	255	315	480	560	420	615	710	675	885	985	850	1115	1240

Average Ultimate Pullout Values in Wood Substrates								
Type	APA Rated OSB				APA Rated Plywood			
Thickness	7/16”	15/32”	19/32”	23/32”	15/32”	19/32”	23/32”	SPF #2
Pullout (lbs)	270	290	310	410	360	410	730	795*

*lbf./in. of thread penetration including tip.

Average Ultimate Pullout Values in 3000 psi Concrete	
Pullout (lbf.)	450*

*lbf/in. of thread penetration, including tip.

Pull out values are offered only as a guide and are not guaranteed in any way.
Designated holding powers are dependent upon quality of substrate and accuracy of installation.
Mule-Hide recommends that fastener pull out testing be performed to verify fastener performance.

CODE APPROVALS/COMPLIANCE

Mule-Hide HDP Fasteners comply with the requirements of the following specifications, test and code requirements when properly installed.

* FM Standard 4450/4470 Approval * Metro-Dade Approved *Florida Product Approval

INSTALLATION INSTRUCTIONS

Steel and Wood Decks
Install fasteners with #3 Phillips drive bit provided in box and a variable speed screw gun. Fastener must penetrate the deck a minimum of ¾” as measured from the underside of the roof deck to the fastener tip. Ensure that fastener is installed perpendicular to surface of roof deck. Care should be taken to not overdrive the fastener causing damage to roof insulation, fastener or roof deck.

Concrete Decks
Pre-drill a 3/16” diameter hole using a drill bit that meets ANSI Standard B212.15 requirements and hammer drill. Drill hole a minimum of ½” deeper than fastener embedment and clean debris from hole. Using the #3 Phillips drill bit provided and a 0 to 1500 rpm screw gun, install fastener to a minimum embedment of 1” until fastener head is properly seated in bar or plate. Care should be taken to not overdrive the fastener causing damage to roof insulation, fastener or roof deck.

Use eye protection when installing fasteners.

PROTECTION & SAFETY

Mule-Hide maintains Material Safety Data Sheets on all of its products. Material Safety Data Sheets contain health and safety information for your development of appropriate product handling procedures to protect your employees and customers. Mule-Hide's Material Safety Data Sheets should be read and understood by all of your supervisory personnel and employees before using Mule-Hide products in your facilities.

MULE-HIDE HDP FASTENERS

LEED INFORMATION

Recycled Content

Postconsumer (1)	15%
Preconsumer (2)	10%
Total Recycled Content (3)	25%
LEED – Eligible Recycled Content (4)	20%

(1) Postconsumer material is defined as waste material generated by households or commercial, industrial and institutional facilities in their role as end-users of the product, which can no longer be used for its intended purposes.
(2) Preconsumer material is defined as material diverted from the waste stream during the manufacturing process. Reutilization of materials (i.e. rework, regrind or scrap generated in a process and capable of being reclaimed within the same process that generated it) is excluded.
(3) Total Recycled Content = Postconsumer Content + Preconsumer Content.
(4) LEED-Eligible Recycled Content = Postconsumer + ½ Preconsumer Content (per LEED Standard). Recycled content value is determined by weight.

ADDITIONAL INFORMATION

The information given on this PDS is subject to change without notice. Always check the Mule-Hide website at www.mulehide.com for the latest information, changes and updates or contact Mule-Hide Products Company at 800-786-1492.

DISCLAIMER

The statements provided concerning the material shown are intended as a guide for material usage and are believed to be true and accurate at the time of printing. No statement made by anyone may supersede this information, except when done in writing by Mule-Hide Products Co., Inc. Since the manner of use is beyond our control, Mule-Hide does not authorize anyone to make any warranty of merchantability or fitness for any particular purpose or any other warranty, guarantee or representation, expressed or implied, concerning this material. This product may be eligible for a Mule-Hide warranty, please check the Mule-Hide website at www.mulehide.com or contact Mule-Hide directly at 800-786-1492 for details. Buyer and user accept the product under these conditions and assume the risk of any failure, any injury person or property (including that of the user), loss or liability resulting from the handling, storage or use of the product whether or not it is handled, stored or used in accordance with the directions or specifications. Mule-Hide must be notified in writing of any claims and be given the opportunity to inspect the alleged failure before repairs are made.

Mule-Hide Products Co., Inc.
1195 Prince Hall Dr.
Beloit, WI 53511

PRODUCT DATA SHEET
PDS 09-5230
Revision Date: OCT-2013

MULE-HIDE EHD FASTENERS

PRODUCT DESCRIPTION

Mule-Hide EHD fasteners (Extra Heavy Duty) are # 15 fasteners manufactured from C-1022 heat treated wire. These fasteners incorporate a No. 3 Phillips recess, flat truss head with a #2 double flute self-drilling point. The drill point has an exclusive tapered entry thread design that allows for fastener penetration into steel roof decks and offers exceptional back-out resistance.

BASIC USES

Mule-Hide's EHD Fasteners are designed specifically for the mechanical attachment of Mule-Hide's reinforced EPDM, TPO and PVC membranes in steel and wood roof decks. Mule-Hide EHD fasteners can also be used for the mechanical attachment of Poly ISO 1 and Poly ISO 2 roof insulation boards and other FM approved insulation / cover boards. The Mule-Hide EHD Fasteners may be used in conjunction with the Mule-Hide 2.4" Seam Plates, 3" Insulation Plates and All Purpose Bars. Refer to Mule-Hide's appropriate Single-Ply Manuals for installation instructions and uses.

SPECIFICATIONS

Wire:	---	SAE C-1022, heat treated wire
Coating:	---	TRU-Kote PC-3
Corrosion Resistance	FM 4470, DIN 50018	<15% Red Rust after 30 cycles
Tensile Strength	ASTM F606-10	4200 lb.
Shear Strength	NASM 1312-20	2400 lb. (thread zone)

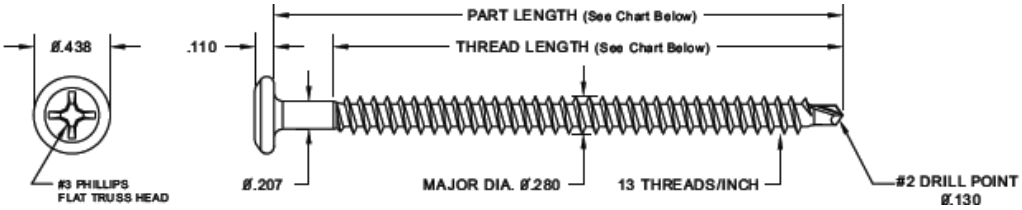

PACKAGING

Screw Length*	Thread Length*	Pieces/Box	Weight/Box
1-1/4"	1-1/4"	1000	12.6 lbs
2"	2"	1000	19.5 lbs
3"	3"	1000	28.2 lbs
4"	3"	1000	37.8 lbs
5"	4"	1000	48.1 lbs
6"	4"	500	27.9 lbs
7	4"	500	33.6 lbs
8"	4"	500	37.3 lbs
9"	4"	250	20.7 lbs
10	4"	250	23.7 lbs
11"	4"	250	25.3 lbs
12"	4"	250	28.9 lbs
14"	4"	250	33.1 lbs
16"	4"	250	36.9 lbs
18"	4"	250	41.7 lbs
20"	4"	250	46.7 lbs
22"	4"	250	51.1lbs
24"	4"	250	56.1 lbs
Screw Length and Thread Length is ± 1/16"			

MULE-HIDE EHD FASTENERS

Performance Information

Average Ultimate Pullout Values in Corrugated Steel Deck Substrates													
Thickness	24 ga.	22 ga.			20 ga.			18 ga.			16 ga.		
Strength, ksi	36.5	33.0	80.0	102.0	33.0	80.0	102.0	33.0	80.0	102.0	33.0	80.0	102.0
Pullout (lbs)	390	465	695	805	605	855	970	925	1125	1215	1175	1370	1460

Average Ultimate Pullout Values in Wood Substrates								
Type	APA Rated OSB				APA Rated Plywood			
Thickness	7/16”	15/32”	19/32”	23/32”	15/32”	19/32”	23/32”	SPF #2
Pullout (lbs)	295	300	310	515	400	525	685	1165*

*lbf./in. of thread penetration including tip.

Pull out values are offered only as a guide and are not guaranteed in any way.
Designated holding powers are dependent upon quality of substrate and accuracy of installation.
Mule-Hide recommends that fastener pull out testing be performed to verify fastener performance.

CODE APPROVALS/COMPLIANCE

Mule-Hide EHD Fasteners comply with the requirements of the following specifications, test and code requirements when properly installed.

* FM Standard 4450/4470 Approval * Metro-Dade Approved *Florida Product Approval

INSTALLATION INSTRUCTIONS

Steel and Wood Decks

Install fasteners with #3 Phillips drive bit provided in box and a variable speed screw gun. Fastener must penetrate the deck a minimum of ¾” as measured from the underside of the roof deck to the fastener tip. Ensure that fastener is installed perpendicular to surface of roof deck. Care should be taken to not overdrive the fastener causing damage to roof insulation, fastener or roof deck. **Use eye protection when installing fasteners.**

LEED INFORMATION

Recycled Content

Postconsumer (1)	15%
Preconsumer (2)	10%
Total Recycled Content (3)	25%
LEED – Eligible Recycled Content (4)	20%

(1) Postconsumer material is defined as waste material generated by households or commercial, industrial and institutional facilities in their role as end-users of the product, which can no longer be used for its intended purposes.
(2) Preconsumer material is defined as material diverted from the waste stream during the manufacturing process. Reutilization of materials (i.e. rework, regrind or scrap generated in a process and capable of being reclaimed within the same process that generated it) is excluded.
(3) Total Recycled Content = Postconsumer Content + Preconsumer Content.
(4) LEED-Eligible Recycled Content = Postconsumer + ½ Preconsumer Content (per LEED Standard). Recycled content value is determined by weight.

MULE-HIDE EHD FASTENERS

PROTECTION & SAFETY

Mule-Hide maintains Material Safety Data Sheets on all of its products. Material Safety Data Sheets contain health and safety information for your development of appropriate product handling procedures to protect your employees and customers. Mule-Hide's Material Safety Data Sheets should be read and understood by all of your supervisory personnel and employees before using Mule-Hide products in your facilities.

ADDITIONAL INFORMATION

The information given on this PDS is subject to change without notice. Always check the Mule-Hide website at www.mulehide.com for the latest information, changes and updates or contact Mule-Hide Products Company at 800-786-1492.

DISCLAIMER

The statements provided concerning the material shown are intended as a guide for material usage and are believed to be true and accurate at the time of printing. No statement made by anyone may supersede this information, except when done in writing by Mule-Hide Products Co., Inc. Since the manner of use is beyond our control, Mule-Hide does not authorize anyone to make any warranty of merchantability or fitness for any particular purpose or any other warranty, guarantee or representation, expressed or implied, concerning this material. This product may be eligible for a Mule-Hide warranty, please check the Mule-Hide website at www.mulehide.com or contact Mule-Hide directly at 800-786-1492 for details. Buyer and user accept the product under these conditions and assume the risk of any failure, any injury person or property (including that of the user), loss or liability resulting from the handling, storage or use of the product whether or not it is handled, stored or used in accordance with the directions or specifications. Mule-Hide must be notified in writing of any claims and be given the opportunity to inspect the alleged failure before repairs are made.

Mule-Hide Products Co., Inc.
1195 Prince Hall Dr.
Beloit, WI 53511

PRODUCT DATA SHEET
PDS 09-6105
Revision Date: OCT-2013

MULE-HIDE ALL PURPOSE BAR

PRODUCT DESCRIPTION

Mule-Hide's All Purpose Bar is a specially extruded aluminum bar without sharp edges.

BASIC USES

Mule-Hide's All Purpose Bar is designed for use as an anchor bar for attachment of the Mule-Hide EPDM membranes. The All Purpose Bar may be installed in the field seam as a batten bar and used at the base of curbs, parapet walls and angle changes as an anchor bar. The All Purpose Bar may also be used with any of the Mule-Hide single-ply membranes as a termination bar. Refer to the Mule-Hide Single-Ply Manuals for specific use and installation instructions.

SPECIFICATIONS

Material: Extruded Aluminum
Dimensions: .050" thick x 1" wide x 10' long per piece.
Holes: 1/4" x 3/8" slotted holes on 6 inch centers.

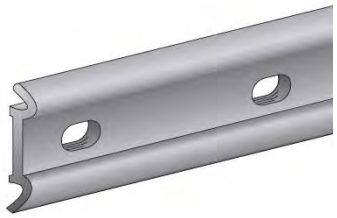

PACKAGING

Packaged: 50 pieces per tube
Approx. shipping weight: 45 lbs per tube

INSTALLATION INSTRUCTIONS

Position Mule-Hide All Purpose Bar as per detail drawings (ribs facing outward or ribs facing inward)
When used as edge termination, ensure that water block sealant has been installed as per appropriate detail drawing, position bar with ribs facing substrate (to form sealant pocket) and attach with appropriate fastener into substrate. When used for base attachment (see appropriate detail) position All Purpose Bar with ribs facing outward and attach with appropriate fastener into substrate.

LEED INFORMATION

Recycled Content

Postconsumer (1)	12%
Preconsumer (2)	32%
Total Recycled Content (3)	44%
LEED – Eligible Recycled Content (4)	28%

(1) Postconsumer material is defined as waste material generated by households or commercial, industrial and institutional facilities in their role as end-users of the product, which can no longer be used for its intended purposes.
(2) Preconsumer material is defined as material diverted from the waste stream during the manufacturing process. Reutilization of materials (i.e. rework, regrind or scrap generated in a process and capable of being reclaimed within the same process that generated it) is excluded.
(3) Total Recycled Content = Postconsumer Content + Preconsumer Content.
(4) LEED-Eligible Recycled Content = Postconsumer + ½ Preconsumer Content (per LEED Standard). Recycled content value is determined by weight.

MULE-HIDE ALL PURPOSE BAR

PROTECTION & SAFETY

Mule-Hide maintains Material Safety Data Sheets on all of its products. Material Safety Data Sheets contain health and safety information for your development of appropriate product handling procedures to protect your employees and customers. Mule-Hide's Material Safety Data Sheets should be read and understood by all of your supervisory personnel and employees before using Mule-Hide products in your facilities.

ADDITIONAL INFORMATION

The information given on this PDS is subject to change without notice. Always check the Mule-Hide website at www.mulehide.com for the latest information, changes and updates or contact Mule-Hide Products Company at 800-786-1492.

DISCLAIMER

The statements provided concerning the material shown are intended as a guide for material usage and are believed to be true and accurate at the time of printing. No statement made by anyone may supersede this information, except when done in writing by Mule-Hide Products Co., Inc. Since the manner of use is beyond our control, Mule-Hide does not authorize anyone to make any warranty of merchantability or fitness for any particular purpose or any other warranty, guarantee or representation, expressed or implied, concerning this material. This product may be eligible for a Mule-Hide warranty, please check the Mule-Hide website at www.mulehide.com or contact Mule-Hide directly at 800-786-1492 for details. Buyer and user accept the product under these conditions and assume the risk of any failure, any injury person or property (including that of the user), loss or liability resulting from the handling, storage or use of the product whether or not it is handled, stored or used in accordance with the directions or specifications. Mule-Hide must be notified in writing of any claims and be given the opportunity to inspect the alleged failure before repairs are made.

Mule-Hide Products Co., Inc.
1195 Prince Hall Dr.
Beloit, WI 53511

MULE-HIDE POLY ISO 1™ ROOF INSULATION

PRODUCT DESCRIPTION

The Mule-Hide Poly ISO 1 polyisocyanurate insulation (flat or tapered) is a closed-cell polyisocyanurate foam core laminated to heavy, black (non-asphaltic) glass fiber reinforced felt facers. The Mule-Hide Poly ISO 1 is compatible with all Mule-Hide membranes and accessories. Available in 20 psi and 25 psi.

BASIC USES

The Mule-Hide Poly ISO 1 insulation board may be used for ballasted, mechanically attached and fully adhered single-ply roofing systems. The Poly ISO 1 insulation board may be installed over approved decks and substrates on new construction, tearoffs, and recover (retrofit) projects. The Poly ISO 1 insulation board may be used in UL Class A and FM Class 1 assemblies.

TYPICAL PHYSICAL PROPERTIES

Property	Test Method	Typical Results
Dimensional Stability	ASTM D-2126	Less than 2% Linear Change
Compressive Strength	ASTM D-1621	20 PSI (Grade 2) 25 PSI (Grade3)
Water Absorption	ASTM D-209	Less than 1% By Volume
Moisture Vapor Transmission	ASTM E-96	Less than One (1) Perm
Service Temperature	---	-100°F to 250°F Max
*The physical properties above are presented as typical average values as determined by accepted ASTM test methods and are subject to change. All information can be confirmed by contacting Mule-Hide Products.		

Poly ISO 1				
Nominal Thickness** (Inches)	(mm)	LTTR R-Value (revised Jan-2014)	C-Value	Metal Deck Max. Flute Spanability (Inches)
1.0	25	5.6	.178	2 ⅝
1.5	38	8.5	.118	4 ⅜
1.6	41	9.1	.110	4 ⅜
1.7	43	9.6	.104	4 ⅜
2.0	51	11.4	.088	4 ⅜
2.5	64	14.4	.069	4 ⅜
2.7	69	15.6	.064	4 ⅜
3.0	76	17.4	.057	4 ⅜
3.3	84	19.2	.052	4 ⅜
3.5	89	20.5	.049	4 ⅜
3.6	91	21.1	.047	4 ⅜
4.0	102	23.6	.042	4 ⅜
*Long Term Thermal Resistance Values are based on ASTM C1289 (revised Jan-2014) and CAN/ULC S770 which provides for a 15-year time weighted average. **Other thicknesses available upon special request.				

MULE-HIDE POLY ISO 1™ ROOF INSULATION

LTTR Value	**ASTM C1289-11** (revised Jan-2014)
20	2 layers of 1.8” Poly ISO 2
25	2 layers of 2.2” Poly ISO 2
30	2 layers of 2.6” Poly ISO 2
35	2 layers of 3.1” Poly ISO 2
40	2 layers of 3.5” Poly ISO 2

Poly ISO 1 Recycle Content
Between 16% and 43% by weight, depending upon thickness (55% post consumer and 45% post industrial). Refer to LEED Memo for Mule-Hide Products.

PACKAGING

Factory applied packaging is only intended for protection during transit. When stored outside or at the job site, the insulation must be stored at least 4" above ground level and completely covered with a weatherproof covering such as a tarpaulin. **Warning - Do Not Leave Exposed:** This product will burn if exposed to an ignition source of sufficient heat and intensity, or an open flame.

CODE APPROVALS/COMPLIANCE

Poly ISO 1 complies with the requirements of the following specifications, test and code requirements when properly installed.

* Federal Specification HH-I-1972/GEN and HH-I-1972/2, Class 1
* ASTM C 1289-05a, Type II, Class 1, Grade 2 (20 psi), Grade 3 (25 psi)
* FM Standard 4450/4470 Approval, Class 1
* UL Standard 1256 Classification
* UL Standard 790 Classification
* UL Standard 263 Fire Resistance Classification

Mule-Hide Poly ISo 1 is manufactured with NexGen Chemistry™ – Zero ODP, CFC Free, EPA Compliant.

INSTALLATION INSTRUCTIONS

Ballasted Single-Ply Membrane Systems - Mule-Hide Poly ISO 1 does not require attachment to the deck in this system. All boards must be tightly fitted together to prevent movement, separation or damage during the installation of the membrane system. All gaps greater than 1/4" must be filled. After the membrane is installed, sufficient amounts of ballast must be applied to prevent membrane and insulation movement. Refer to the Mule-Hide Manual and FM Loss Prevention Data Sheet 1-29 for information regarding ballasting guidelines.

Mechanically Attached Single-Ply Membrane Systems - Mule-Hide Poly ISO 1 should be attached with Mule-Hide fasteners and insulation plates (or FM Approved fasteners) using a minimum of 4 fasteners per 4'x 4' board (1 fastener per 4 square feet) and a minimum of 6 fasteners per 4'x 8' board (1 fastener per 5.33 square feet). Refer to the Mule-Hide Manual for proper fastener placement.

Fully Adhered Single-Ply Membrane Systems - Mule-Hide Poly ISO 1 should be installed with the perforated side down. Insulation attachment will vary depending upon insulation thickness and job requirements. If the top layer is less than 2” thick, install a minimum of 8 fasteners per 4'x 4' board (1 fastener per 2 square feet) and a minimum of 16 fasteners per 4'x 8' board (1 fastener per 2 square feet). If the top layer is 2” thick or thicker, install 4 fasteners per 4’ x 4’ or 8 fasteners per 4’ x 8’ insulation board. Refer to the Mule-Hide Manual for proper fastener density and placement. Additional fastening may be required for certain job conditions.

MULE-HIDE POLY ISO 1™ ROOF INSULATION

Fully Adhered Single-Ply Membrane Systems - continued
In some instances hot steep asphalt or insulation adhesive may be used to attach the Mule-Hide Poly ISO 2™ to approved concrete decks. Only 4'x 4' boards may be used. Contact Mule-Hide's Technical Department for specific requirements and procedures.

PROTECTION & SAFETY

Mule-Hide maintains Material Safety Data Sheets on all of its products. Material Safety Data Sheets contain health and safety information for your development of appropriate product handling procedures to protect your employees and customers. Mule-Hide's Material Safety Data Sheets should be read and understood by all of your supervisory personnel and employees before using Mule-Hide products in your facilities.

ADDITIONAL INFORMATION

The information given on this PDS is subject to change without notice. Always check the Mule-Hide website at www.mulehide.com for the latest information, changes and updates or contact Mule-Hide Products Company at 800-786-1492.

DISCLAIMER

The statements provided concerning the material shown are intended as a guide for material usage and are believed to be true and accurate at the time of printing. No statement made by anyone may supersede this information, except when done in writing by Mule-Hide Products Co., Inc. Since the manner of use is beyond our control, Mule-Hide does not authorize anyone to make any warranty of merchantability or fitness for any particular purpose or any other warranty, guarantee or representation, expressed or implied, concerning this material. This product may be eligible for a Mule-Hide warranty, please check the Mule-Hide website at www.mulehide.com or contact Mule-Hide directly at 800-786-1492 for details. Buyer and user accept the product under these conditions and assume the risk of any failure, any injury person or property (including that of the user), loss or liability resulting from the handling, storage or use of the product whether or not it is handled, stored or used in accordance with the directions or specifications. Mule-Hide must be notified in writing of any claims and be given the opportunity to inspect the alleged failure before repairs are made.

Mule-Hide Products Co., Inc.
1195 Prince Hall Dr.
Beloit, WI 53511

PRODUCT DATA SHEET
PDS 09-6215
Revision Date: Jan 2014

MULE-HIDE Poly ISO 2™ ROOF INSULATION

PRODUCT DESCRIPTION

The Mule-Hide Poly ISO 2™ polyisocyanurate insulation (flat or tapered) is a closed-cell polyisocyanurate foam core laminated to heavy, black (non-asphaltic) glass fiber reinforced felt facers. The Mule-Hide Poly ISO 2™ is compatible with all Mule-Hide membranes and accessories. Available in 20 and 25 psi densities.

BASIC USES

Mule-Hide Poly ISO 2™ insulation board may be used for ballasted, mechanically attached and fully adhered single-ply roofing systems. Poly ISO 2™ insulation board may be installed over approved decks and substrates on new construction, tearoffs, and recover (retrofit) projects. Rated for use in UL Class A and FM Class 1 assemblies.

TYPICAL PHYSICAL PROPERTIES

Property	Test Method	Typical Results
Dimensional Stability	ASTM D-2126	Less than 2% Linear Change
Compressive Strength	ASTM D-1621 (10% deformation)	20 PSI or 25 PSI
Water Absorption	ASTM C-209, ASTM D-2842	< 1%, < 3.5%
Moisture Vapor Transmission	ASTM E-96	Less than One (1) Perm
Product Density	ASTM D-1622	Nominal 2.0 lbs per cubic foot
Flame Spread (foam core)	ASTM E-84 (full 10 min. test)	40 to 60*
Smoke Developed	ASTM E-84 (full 10 min. test)	50 to 170*
Service Temperature	---	-40°F to 200°F Max**
Tensile Strength	ASTM D-1623	>730 psf (35 kPa)

* The numerical ratings are determined by ASTM Test Method E-84 are not intended to reflect hazards presented by this or any other material under actual fire conditions. A flame spread index of 75 or less and smoke development of 450 or less meet code requirements regarding flame spread and smoke development for foam plastic roof insulation. However, the codes exempt foam plastic insulation when used in roof deck constructions that comply as an assembly with FM 4450 or UL 1256 (see IBC, NBC, UBC and SBS Sections on Foam Plastic Insulation (Chapter 26). Smoke development does not apply to roofing.
**ASTM C1289 Standard Specification for Faced Rigid Cellular Polyisocyanurate Thermal Insulation.
The physical properties above are presented as typical average values as determined by accepted ASTM test methods and are subject normal manufacturing variation.

Nominal Thickness** (Inches)	**Poly ISO 2™**			Metal Deck Max. Flute Spanability (Inches)
	(mm)	LTTR R-Value (revised Jan-2014)	C-Value	
1.0	25.4	5.6	.178	2 ⅝
1.5	38.1	8.5	.118	4 ⅜
2.0	50.8	11.4	.088	4 ⅜
2.5	63.5	14.4	.069	4 ⅜
3.0	76.2	17.4	.057	4 ⅜
3.1	78.7	18.0	.055	4 ⅜
3.5	88.9	20.5	.049	4 ⅜
4.0	101.6	23.6	.042	4 ⅜

*LTTR (Long Term Thermal Resistance) values were determined in accordance with CAN/ULC-S770 and ASTM C1289 (Revised Jan-2014), Annex A1. All test samples were third-party selected and tested by an accredited material testing laboratory. The LTTR results were reviewed and authorized by FM Approvals and certified by the PIMA Quality Mark Program.
**Other thicknesses available upon special request.

MULE-HIDE Poly ISO 2™ ROOF INSULATION

LTTR Value	**ASTM C1289-11** (revised Jan-2014)
20	2 layers of 1.8” Poly ISO 2
25	2 layers of 2.2” Poly ISO 2
30	2 layers of 2.6” Poly ISO 2
35	2 layers of 3.1” Poly ISO 2
40	2 layers of 3.5” Poly ISO 2

Poly ISO 2 Recycle Content

Between 16% and 43% by weight, depending upon thickness (55% post consumer and 45% post industrial). Refer to LEED Memo for Mule-Hide Products.

PACKAGING

Factory applied packaging is only intended for protection during transit. When stored outside or at the job site, the insulation must be stored at least 4" above ground level and completely covered with a weatherproof covering such as a tarpaulin. **Warning - Do Not Leave Exposed:** This product will burn if exposed to an ignition source of sufficient heat and intensity, or an open flame.

CODE APPROVALS/COMPLIANCE

Poly ISO 2™ complies with the requirements of the following specifications, test and code requirements when properly installed.

* Federal Specification HH-I-1972/GEN and HH-I-1972/2, Class 1 (have been cancelled)
* ASTM C 1289, Type II, Class 1, Grade 2 (20 psi) or Grade 3 (25 psi)
* FM Standard 4450/4470 Approval, Class 1
* UL Standard 1256 Classification
* UL Standard 790 Classification
* UL Standard 263 Fire Resistance Classification

Mule-Hide Poly ISO 2™ is manufactured using CFC-, HCFC-, and HFC-free foam blowing technology with zero ozone depletion potential (ODP) and zero (negligible) global warming potential (GWP).

INSTALLATION INSTRUCTIONS

Ballasted Single-Ply Membrane Systems - Mule-Hide Poly ISO 2™ does not require attachment to the deck in this system. All boards must be tightly fitted together to prevent movement, separation or damage during the installation of the membrane system. All gaps greater than 1/4" must be filled. After the membrane is installed, sufficient amounts of ballast must be applied to prevent membrane and insulation movement. Refer to the Mule-Hide Manual and FM Loss Prevention Data Sheet 1-29 for information regarding ballasting guidelines.

Mechanically Attached Single-Ply Membrane Systems - Mule-Hide Poly ISO 2™ should be attached with Mule-Hide fasteners and insulation plates (or FM Approved fasteners) using a minimum of 4 fasteners per 4'x 4' board (1 fastener per 4 square feet) and a minimum of 6 fasteners per 4'x 8' board (1 fastener per 5.33 square feet). Refer to the Mule-Hide Manual for proper fastener placement.

Fully Adhered Single-Ply Membrane Systems - Mule-Hide Poly ISO 2™ should be installed with the perforated side down. Insulation attachment will vary depending upon insulation thickness and job requirements. If the top layer is less than 2” thick, install a minimum of 8 fasteners per 4'x 4' board (1 fastener per 2 square feet) and a minimum of 16 fasteners per 4'x 8' board (1 fastener per 2 square feet). If the top layer is 2” thick or thicker, install 4 fasteners per 4’ x 4’ or 8 fasteners per 4’ x 8’ insulation board. Refer to the Mule-Hide Manual for proper fastener density and placement. Additional fastening may be required for certain job conditions.

In some instances hot steep asphalt or insulation adhesive may be used to attach the Mule-Hide Poly ISO 2™ to approved concrete decks. Only 4'x 4' boards may be used. Contact Mule-Hide's Technical Department for specific requirements and procedures.

MULE-HIDE Poly ISO 2™ ROOF INSULATION

PROTECTION & SAFETY

Mule-Hide maintains Material Safety Data Sheets on all of its products. Material Safety Data Sheets contain health and safety information for your development of appropriate product handling procedures to protect your employees and customers. Mule-Hide's Material Safety Data Sheets should be read and understood by all of your supervisory personnel and employees before using Mule-Hide products in your facilities.

ADDITIONAL INFORMATION

The information given on this PDS is subject to change without notice. Always check the Mule-Hide website at www.mulehide.com for the latest information, changes and updates or contact Mule-Hide Products Company at 800-786-1492.

DISCLAIMER

The statements provided concerning the material shown are intended as a guide for material usage and are believed to be true and accurate at the time of printing. No statement made by anyone may supersede this information, except when done in writing by Mule-Hide Products Co., Inc. Since the manner of use is beyond our control, Mule-Hide does not authorize anyone to make any warranty of merchantability or fitness for any particular purpose or any other warranty, guarantee or representation, expressed or implied, concerning this material. This product may be eligible for a Mule-Hide warranty, please check the Mule-Hide website at www.mulehide.com or contact Mule-Hide directly at 800-786-1492 for details. Buyer and user accept the product under these conditions and assume the risk of any failure, any injury person or property (including that of the user), loss or liability resulting from the handling, storage or use of the product whether or not it is handled, stored or used in accordance with the directions or specifications. Mule-Hide must be notified in writing of any claims and be given the opportunity to inspect the alleged failure before repairs are made.

Mule-Hide Products Co., Inc.
1195 Prince Hall Dr.
Beloit, WI 53511

PRODUCT DATA SHEET
PDS 09-6220
Revision Date: Jan 2012

MULE-HIDE POLY ISO 1-HD (Cover Board)

PRODUCT DESCRIPTION

Mule-Hide Poly ISO 1-HD is ½" thick, high density polyisocyanurate insulation board that was specifically designed for use as a cover board. This product consists of a closed-cell polyisocyanurate foam core laminated to premium performance coated glass fiber felt facers. Mule-Hide Poly ISO 1-HD is compatible with all Mule-Hide membranes and accessories. In addition to providing a durable underlayment roofing membranes, Poly ISO HD-1 has a R-value of 2.5 which is significantly higher than that of other cover board products such as woodfiber or gypsum.

BASIC USES

Mule-Hide Poly ISO 1-HD is designed for use as a cover board over roof insulation boards or existing membranes. It is compatible with Single-Ply roofing systems (ballasted, mechanically attached and fully adhered) and Modified Bitumen Roofing Systems, on new construction, tearoff, and recover (retrofit) projects. Suitable for use with approved fasteners and plates, and low-rise adhesive. Poly ISO 1-HD can achieve a FM hail resistance rating of SH-1 with certain membranes.

TYPICAL PHYSICAL PROPERTIES (polyisocyanurate foam core only)

Property	Test Method	Typical Results
Dimensional Stability	ASTM D-2126	Less than 0.5% Linear Change
Compressive Strength	ASTM D-1621	>100 psi
Water Absorption	ASTM D-209	Less than 1% By Volume
Resistance to Mold	ASTM D-3273	Passed (10)
Service Temperature	---	260°F or less
Recycled Content	---	>8%
R-Value @ ½" (13 mm)	ASTM C-518	2.5
*The physical properties above are presented as typical average values as determined by accepted ASTM test methods and are subject to change. All information can be confirmed by contacting Mule-Hide Products.		

PACKAGING

PACKAGING & WEIGHT		
Weight	11 lbs. per 4' x 8' panel	0.3431 lbs / sq. ft.
Packaging	96 pieces per bundle	

Factory applied packaging is only intended for protection during transit. When stored outside or at the job site, the insulation must be stored at least 4" above ground level and completely covered with a weatherproof covering such as a tarpaulin. **Warning - Do Not Leave Exposed:** This product will burn if exposed to an ignition source of sufficient heat and intensity, or an open flame.

CODE APPROVALS/COMPLIANCE

Poly ISO 1-hd complies with the requirements of the following specifications, test and code requirements when properly installed.

* ASTM E-108
*FM Approved – consult RoofNav for specific assemblies
*UL Classified 790

Mule-Hide Poly ISo 1 is manufactured with NexGen Chemistry™ – Zero ODP, CFC Free, EPA Compliant.

MULE-HIDE POLY ISO 1-HD (Cover Board)

INSTALLATION INSTRUCTIONS

General
All boards must be tightly fitted together to prevent movement, separation or damage during the installation of the membrane system. All gaps greater than 1/4" must be filled.

Ballasted Single-Ply Membrane Systems - Mule-Hide Poly ISO 1-HD does not require attachment to the deck in this system. Sufficient amounts of ballast must be applied to prevent membrane and insulation movement. Refer to the Mule-Hide Manual and FM Loss Prevention Data Sheet 1-29 for information regarding ballasting guidelines.

Mechanically Attached Single-Ply Membrane Systems - Mule-Hide Poly ISO 1-HD should be attached with Mule-Hide fasteners and insulation plates (or FM Approved fasteners) using a minimum of 4 fasteners per 4'x 4' board (1 fastener per 4 square feet) and a minimum of 6 fasteners per 4'x 8' board (1 fastener per 5.33 square feet). Refer to the Mule-Hide Manual for proper fastener placement.

Fully Adhered Single-Ply Membrane Systems - Mule-Hide Poly ISO 1-HD should be attached using a minimum of 8 fasteners per 4'x 4' board (1 fastener per 2 square feet) and a minimum of 16 fasteners per 4'x 8' board (1 fastener per 2 square feet). Refer to the Mule-Hide Manual for proper fastener placement.

Attachment - In some instances insulation adhesive may be used to attach the Mule-Hide Poly ISO 1-HD to approved substrates. Only 4'x 4' boards may be used. Contact Mule-Hide's Technical Department for specific requirements and procedures.

PROTECTION & SAFETY

Mule-Hide maintains Material Safety Data Sheets on all of its products. Material Safety Data Sheets contain health and safety information for your development of appropriate product handling procedures to protect your employees and customers. Mule-Hide's Material Safety Data Sheets should be read and understood by all of your supervisory personnel and employees before using Mule-Hide products in your facilities.

ADDITIONAL INFORMATION

The information given on this PDS is subject to change without notice. Always check the Mule-Hide website at www.mulehide.com for the latest information, changes and updates or contact Mule-Hide Products Company at 800-786-1492.

DISCLAIMER

The statements provided concerning the material shown are intended as a guide for material usage and are believed to be true and accurate at the time of printing. No statement made by anyone may supersede this information, except when done in writing by Mule-Hide Products Co., Inc. Since the manner of use is beyond our control, Mule-Hide does not authorize anyone to make any warranty of merchantability or fitness for any particular purpose or any other warranty, guarantee or representation, expressed or implied, concerning this material. This product may be eligible for a Mule-Hide warranty, please check the Mule-Hide website at www.mulehide.com or contact Mule-Hide directly at 800-786-1492 for details. Buyer and user accept the product under these conditions and assume the risk of any failure, any injury person or property (including that of the user), loss or liability resulting from the handling, storage or use of the product whether or not it is handled, stored or used in accordance with the directions or specifications. Mule-Hide must be notified in writing of any claims and be given the opportunity to inspect the alleged failure before repairs are made.

Georgia-Pacific

DensDeck®
Prime Roof Board

Technical Service Hotline 1.800.225.6119 or
www.densdeck.com

Manufacturer

Georgia-Pacific Gypsum
133 Peachtree Street
Atlanta, GA 30303

Georgia-Pacific Canada
2180 Meadowvale Boulevard, Suite 200
Mississauga, ON L5N 5S3

Technical Service Hotline: 1-800-225-6119

Description

DensDeck® Prime Roof Board has been enhanced to provide a broader compatibility and higher performance with roofing adhesives. Face mat enhancements allow adhesives to be applied more uniformly and consistently. In adhered, single ply membrane testing, enhanced DensDeck Prime demonstrated an average of 24% better bond than the original products, when using solvent based adhesives. (Average based on 60 sq.ft./gal coverage rates.)* Choose DensDeck Prime Roof Boards for adhered and self-adhered "peel & stick" roofing systems, as well as hot mopped, cold mastic and torch-applied modified bitumen roofs. Enhanced DensDeck Prime Roof Boards create a stronger and more economical installation by reducing the amounts of mastic or adhesive used and potentially eliminates the field primer. Consult with membrane manufacturer for actual priming requirements.

DensDeck Prime Roof Boards are the first and only fiberglass mat gypsum roof boards with a 90-day weather exposure limited warranty when applied vertically on a parapet wall.** (Limited to 1/2″ and 5/8″ products only.)

Primary Uses

Roof system manufacturers and designers have found DensDeck Prime Roof Board to be compatible with many types of roofing systems, including: modified asphalt, single-ply, metal systems, recover board, as well as an overlayment for polyisocyanurate and polystyrene insulation. DensDeck Prime Roof Board can also be used as a form board for poured gypsum concrete deck in roof applications as well as a substrate for spray foam roofing systems. 1/2″ (12.7 mm) and 5/8″ (15.9 mm) DensDeck Prime Roof Board may also be used in vertical applications as a backer board or liner for the roof side of parapet walls.

DensDeck Prime Roof Board may allow the bonding of cold mastic modified bitumen and torching directly to the surface. *Consult with the system manufacturer for recommendations on this application.*

DensDeck Prime Roof Board is the preferred substrate for vapor retarders.

Standards and Code Approvals

DensDeck Prime Roof Boards are manufactured to meet ASTM C1177 and have the following approvals:

- Florida Product Approved
- Miami-Dade County Product Control Approved

Recommendations and Limitations

DensDeck Prime Roof Boards are manufactured to act with a properly designed roof system following good roofing practices. The actual use of DensDeck Prime Roof Board as a roofing component in any system or assembly is the responsibility of the roofing system's design authority. Consult with the appropriate system manufacturer and/or design authority for system and assembly specifications and instructions on applying other products to DensDeck Prime Roof Board. Georgia-Pacific does not warrant and is not responsible for any systems or assemblies utilizing DensDeck Prime Roof Board or any component in such systems or assemblies other than DensDeck Prime Roof Board.

The need for a separator sheet between the DensDeck Prime Roof Board and the roofing membrane must be determined by the roof membrane manufacturer or roofing system designer.

* Testing was done in accordance with FM approvals 4470, Appendix C: Small Scale Tests, Membrane Delamination Tests for Roofing Membranes and Substrates Using Tensile Loading.

** For complete warranty details, visit www.DensDeck.com. (Limited to 1/2″ and 5/8″ products only.)

Confirm any priming requirements with the membrane manufacturer. When applying solvent-based adhesives or primers, allow sufficient time for the solvent to flash off to avoid damage to roofing components.

DensDeck Prime Roof Boards should not be subjected to abnormal or excessive loads or foot traffic, such as, but not limited to, use on plaza decks or under steel-wheeled equipment that may fracture or damage the panels. Provide suitable roofing system protection when required.

When using DensDeck Prime Roof Boards for hot-mopped applications, Georgia-Pacific recommends maximum asphalt application temperatures for Type III asphalt of 425°F (218°C) to 450°F (232°C). Application temperatures above these recommended temperatures may adversely affect roof system performance. For application temperatures in excess of 450°F (232°C) and for mopping of type IV asphalt, ribbon or spot mopping or the installation of a perforated base sheet are recommended methods of bonding asphalt in lieu of full mopping. Consult and follow the roofing system manufacturer's specifications for full mopping applications and temperature requirements.

When using DensDeck Prime Roof Board as a substrate for torch applications, ensure that the product is dry and that the proper torching technique is used. Limit the heat to the DensDeck Prime Roof Board. Maintain a majority of the torch flame directly on the roll.

Conditions beyond the control of Georgia-Pacific, such as weather conditions, dew, leaks, application temperatures and techniques may cause adverse effects with roofing systems.

Handling and Use–CAUTION

This product contains fiberglass facings which may cause skin irritation. Dust and fibers produced during the handling and installation of the product may cause skin, eye and respiratory tract irritation. Avoid breathing dust and minimize contact with skin and eyes. Wear long sleeve shirts, long pants and eye protection. Always maintain adequate ventilation. Use a dust mask or NIOSH/MSHA approved respirator as appropriate in dusty or poorly ventilated areas.

Moisture Management

DensDeck Prime Roof Boards, like other components used in roofing systems, must be protected from exposure to moisture before, during and after installation.

Remove the plastic packaging from all DensDeck Prime Roof Board immediately upon receipt of delivery. Failure to remove the plastic packaging may result in entrapment of condensation or moisture. DensDeck Prime Roof Board stored outside must be stored level and off the ground and protected by a breathable waterproof covering. Provide means for air circulation around and under stored bundles of DensDeck Prime Roof Board. DensDeck Prime Roof Board must be covered the same day as installed.

Avoid application of DensDeck Prime Roof Boards during rain, heavy fog and any other conditions that may deposit moisture on the surface, and avoid the overuse of non-vented, direct-fired heaters during winter months. When roofing systems are installed on new poured concrete or light weight concrete decks or when re-roofing over an existing concrete deck, a vapor barrier should be installed above the concrete to retard the migration of water from the concrete into the roof assembly. Always consult the roofing system manufacturer or design authority for specific instructions for applying other products to DensDeck Prime Roof Boards.

Moisture vapor movement by convection must be eliminated, and the flow of water by gravity through imperfections in the roof system must be controlled. After a leak has occurred, no condensation on the upper surface of the system should be tolerated, and the water introduced by the leak must be dissipated to the building interior in a minimum amount of time.

Although DensDeck Prime Roof Boards are engineered with fiberglass facings and high density gypsum cores, the presence of free moisture can have a detrimental

continued →

Submittal Approvals

Job Name _____

Contractor _____

Date _____

Stamps / Signatures

effect on the performance of the product and the installation of roofing membranes. For example, hot asphalt applications can blister; torched modified bitumen may not properly bond; and adhesives for single ply membranes may not dry properly. Moisture accumulation may also significantly decrease wind uplift and vertical pull resistance in the system or assembly. DensDeck® Prime Roof Boards containing excessive free moisture content may need to be evaluated for structural stability to assure wind uplift performance.

Fire Resistance Classifications

DensDeck Prime Roof Boards are excellent fire barriers over combustible and noncombustible roof decks, including steel decks.

UL 790 Classification. DensDeck Prime Roof Boards have been classified by Underwriters Laboratories LLC (UL) for use as a fire barrier over combustible and noncombustible decks in accordance with the ANSI/UL 790 test standard. The UL classification includes a comprehensive Class A, B or C rating. For additional information concerning the UL 790 classification, consult the UL Certification Directory.

UL 1256 Classification. DensDeck Prime Roof Boards have also been classified by UL in roof deck constructions for internal (under deck) fire exposure in accordance with the ANSI/UL 1256 Steiner Tunnel test. For additional information concerning the UL 1256 classification, consult the UL Certification Directory.

FM Class 1 Approvals. DensDeck Prime Roof Boards are included in numerous roofing assemblies with a Factory Mutual (FM) Class 1 fire rating. 1/4″ (6.4 mm) DensDeck Prime Roof Boards have passed testing under the FM Calorimeter Standard 4450 and have been approved by FM as such for insulated steel deck roofs when installed according to the conditions identified by FM. For more information concerning FM Approvals and FM Class 1 assemblies with DensDeck Prime Roof Boards, consult FM or RoofNav®.

Type X. 5/8″ (15.9 mm) DensDeck® Prime Fireguard® Roof Boards are manufactured to meet the "Type X" requirements of ASTM C1177 for increased fire resistance beyond regular gypsum board.

UL Fire Resistance Ratings. 5/8″ (15.9 mm) DensDeck Prime Fireguard Roof Boards are designated as **Type DD** by UL and included in assembly designs investigated by UL for hourly fire resistance ratings. 5/8″ (15.9 mm) DensDeck Prime Fireguard Roof Boards may also replace any unclassified 5/8″ (15.9 mm) gypsum board in an assembly in the UL Fire Resistance Directory under the prefix "P".

Flame Spread and Smoke Developed. When tested in accordance with ASTM E84, DensDeck Prime Roof Boards had Flame Spread 0, Smoke Developed 0.

Wind Uplift

DensDeck Prime Roof Boards are included in numerous assemblies evaluated by FM or other independent laboratories for wind uplift performance. For information concerning such assemblies, please visit www.roofnav.com.

Physical Properties

Properties	1/4″ (6.4 mm)	1/2″ (12.7mm)	5/8″ (15.9 mm)
Thickness, nominal	1/4″ (6.4 mm) ± 1/16″ (1.6 mm)	1/2″ (12.7 mm) ± 1/32″ (.8 mm)	5/8″ (15.9 mm) ± 1/32″ (.8 mm)
Width, standard	4′ (1219 mm) ± 1/8″ (3 mm)	4′ (1219 mm) ± 1/8″ (3 mm)	4′ (1219 mm) ± 1/8″ (3 mm)
Length, standard	4′ (1219 mm) and 8′ (2438 mm) ± 1/4″ (6.4 mm)	4′ (1219 mm) and 8′ (2438 mm) ± 1/4″ (6.4 mm)	4′ (1219 mm) and 8′ (2438 mm) ± 1/4″ (6.4 mm)
Weight, nominal, lbs./sq. ft. (Kg/m^2)	1.2 (5.9)	2.0 (9.8)	2.5 (12.2)
Surfacing	Fiberglass mat with non-asphaltic coating	Fiberglass mat with non-asphaltic coating	Fiberglass mat with non-asphaltic coating
Flexural Strength[1], parallel, lbf. min. (N)	≥40 (178)	≥80 (356)	≥100 (444)
Flute Spanability[2]	2-5/8″ (66.7 mm)	5″ (127 mm)	8″ (203 mm)
Permeance[3], Perms (ng/Pa•S•m^2)	>30 (>1710)	>23 (>1300)	>17 (>970)
R Value[4], ft^2•°F•hr/BTU (m^2•K/W)	.28	.56	.67
Linear Variation with Change in Temp., in/in °F (mm/mm/C°)	8.5 x 10^{-6} (15.3 x 10^{-6})	8.5 x 10^{-6} (15.3 x 10^{-6})	8.5 x 10^{-6} (15.3 x 10^{-6})
Linear Variation with Change in Moisture	6.25 x 10^{-6}	6.25 x 10^{-6}	6.25 x 10^{-6}
Water Absorption[5], % max	<10	<10	<10
Compressive Strength[6], psi nominal	900	900	900
Surface Water Absorption, grams, nominal	<2.0	<2.0	<2.0
Flame Spread, Smoke Developed (ASTM E84)	0/0	0/0	0/0
Bending Radius	4′ (1219 mm)	6′ (1829 mm)	8′ (2438 mm)

1. Tested in accordance with ASTM C473 method B.
2. Tested in accordance with ASTM E661.
3. Tested in accordance with ASTM E96 (dry cup method).
4. Tested in accordance with ASTM C518 (heat flow meter).
5. Specified values per ASTM C1177.
6. Tested in accordance with ASTM C473.

Georgia-Pacific Gypsum

U.S.A. Georgia-Pacific Gypsum LLC
Georgia-Pacific Gypsum II LLC
Canada Georgia-Pacific Canada LP

SALES INFORMATION AND ORDER PLACEMENT

U.S.A. West: **1-800-824-7503**
Midwest: **1-800-876-4746**
South Central: **1-800-231-6060**
Southeast: **1-800-327-2344**
Northeast: **1-800-947-4497**

CANADA Canada Toll Free: **1-800-387-6823**
Quebec Toll Free: **1-800-361-0486**

TECHNICAL INFORMATION
U.S.A. and Canada: **1-800-225-6119,** www.gpgypsum.com

©2014 Georgia-Pacific Gypsum LLC. All rights reserved. 1/14. GP-TM Lit. Item #102169.

TRADEMARKS DENSDECK, FIREGUARD and the GEORGIA-PACIFIC logo are trademarks owned by or licensed to Georgia-Pacific Gypsum LLC. ROOFNAV is a registered mark of FM Global.

WARRANTIES, REMEDIES AND TERMS OF SALE For current warranty information for this product, please go to www.gpgypsum.com and select the product for warranty information. All sales of this product by Georgia-Pacific are subject to our Terms of Sale available at www.gpgypsum.com.

UPDATES AND CURRENT INFORMATION The information in this document may change without notice. Visit our website at www.gpgypsum.com for updates and current information.

CAUTION For product fire, safety and use information, go to www.buildgp.com/safetyinfo or call 1-800-225-6119.

FIRE SAFETY CAUTION Passing a fire test in a controlled laboratory setting and/or certifying or labeling a product as having a one-hour, two-hour, or any other fire resistance or protection rating and, therefore, as acceptable for use in certain fire rated assemblies/systems, does not mean that either a particular assembly/system incorporating the product, or any given piece of the product itself, will necessarily provide one-hour fire resistance, two-hour fire resistance, or any other specified fire resistance or protection in an actual fire. In the event of an actual fire, you should immediately take any and all actions necessary for your safety and the safety of others without regard for any fire rating of any product or assembly/system.

Submittal Sheet

USG Securock® Brand Gypsum-Fiber Roof Board

High-performance gypsum-fiber roof board for use in low-slope commercial roofing systems

- Exceptional bond and low absorption in adhered systems
- Moisture and mold resistant
- Excellent wind-uplift performance
- Manufactured from 97% recycled material

Description

USG Securock® Gypsum-Fiber Roof Board is a high-performance roof board for use in low-slope roofing systems. Its unique, fiber-reinforced, homogenous composition gives the panel strength and water resistance through to the core. USG Securock Gypsum-Fiber Roof Board provides exceptional bond and low absorption in adhered systems and with its homogenous composition achieves high wind-uplift ratings with no risk of facer delamination. Made from 97% recycled material, USG Securock Gypsum-Fiber Roof Board combines superior performance with sustainable design for all types of roofing systems including single-ply, fluid-applied, built-up, spray foam, metal and modified bitumen roofing.

Advantages

Exceptional Strength Engineered to provide superior wind-uplift performance for a wide variety of roof assemblies. USG Securock Gypsum-Fiber Roof Board has uniform composition providing enhanced bond strength of membrane systems with no risk of facer delamination.

Fire Performance Provides excellent fire performance and demonstrates exceptional surface burning characteristics (ASTM E84 (CAN/ULC-S102) Flame Spread 5, Smoke Developed 0).

Moisture and Mold Uniform water-resistant core ensures excellent moisture and mold resistance. Scored a maximum "10" for mold resistance on ASTM D3273.

Versatile Can be used as a component in single-ply, fluid-applied, built-up, spray foam, metal and modified bitumen roofing.

Sustainability Made from 97% recycled materials and has earned independent certification from Scientific Certification Systems for this achievement.

Limitations

- USG Securock Gypsum-Fiber Roof Board is engineered to perform within a properly designed roof system. The use of USG Securock Gypsum-Fiber Roof Board as a roofing component is the responsibility of the design professional.
- Consult roofing manufacturers for specific instructions on the application of their products to USG Securock Gypsum-Fiber Roof Board
- Weather conditions, dew, application temperature, installation techniques and moisture drive can have adverse effects on the performance of the roof system and are beyond the control of USG.
- Keep USG Securock Gypsum-Fiber Roof Board panels dry before, during and after installation. USG Securock Gypsum-Fiber Roof Board should not be installed during rains, heavy fogs and any other conditions that deposit moisture on the surface of the board. Apply only as much USG Securock Gypsum-Fiber Roof Board that can be covered by final roof membrane system in the same day. Avoid exposure to moisture from leaks or condensation.
- For re-roof or re-cover applications, existing roofing system must be dry throughout prior to application of USG Securock Gypsum-Fiber Roof Board.
- Plastic or poly packaging applied at the plant to protect board during rail or other transit should be removed upon receipt to prevent condensation or trapping of moisture, which may cause application problems.
- USG Securock Gypsum-Fiber Roof Board should be stored flat and off the ground with protection from the weather. If stored outdoors, a breathable waterproof covering should be used.
- When applying solvent-based adhesives or primers, allow sufficient time for the solvent to evaporate to avoid damage to roofing components.
- USG allows the bonding of cold mastic modified bitumen and torching directly to the surface. Consult with the system manufacturer for recommendations on this application.
- USG recommends maximum asphalt application temperature for Type III asphalt of 455 °F when using USG Securock Gypsum-Fiber Roof Board. Application temperatures above these recommended temperatures may adversely affect roof system performance.

Installation

- Refer to roof system manufacturer's written instructions, local code requirements and Factory Mutual Global (FMG) and/or Underwriters Laboratories (UL) requirements for proper installation techniques.
- Use fasteners specified in accordance with above requirements. Install approved fasteners with plates into the USG Securock Gypsum-Fiber Roof Board, flush with the surface. Fasteners should be installed in strict compliance with the roof system manufacturer's installation recommendations and FMG Loss Prevention Data Sheet 1-29. Proper fastener spacing is essential to achieve wind-uplift performance.

USG

– Locate edge joints on, and parallel to, deck ribs. Stagger end joints of adjacent lengths of USG Securock Gypsum-Fiber Roof Board. Butt board edges and ends loosely in typical installations.
– Butt board edges and ends loosely (minimum 1/16" gap on all edges) in typical installations. This gap may need to be larger depending on factors like the roof deck's size, membrane color, ultimate deck surface temperature and time of year the roof assembly is installed. Installations during temperatures below 50°F may require larger spacing. Please refer to USG's published physical properties below to calculate the actual gap needed for your specific project for all thicknesses.
– Roof boards should never be installed frozen.
– See product data table below for maximum flute span when panels are applied directly over metal decking.
– For vertical parapet applications, only 1/2" or 5/8" panels should be used. Maximum framing spacing is 24" o.c.

Fire Performance

– UL Classified as to Surface Burning Characteristics and Non-Combustability in accordance with ASTM E84 (CAN/ULC-S102)
  – Flame Spread 5 and Smoke Developed 0
– 1/4", 3/8", 1/2" and 5/8" Thickness — Class A in accordance with UL790 (CAN/ULC-S107). See the UL Building Materials Directory for more information.
– 5/8" Thickness — Meets requirements of Type X per ASTM C1278 and may be used in P series designs as a thermal barrier.

System Performance

– FM Approved
  – Complies with requirements of FM 4450 and FM 4470
  – Meets FM Class 1

Standards Compliance

USG Securock Gypsum-Fiber Roof Board is manufactured to conform to ASTM C1278, "Standard Specification for Fiber-Reinforced Gypsum Panel."

Physical Properties

	USG Securock Gypsum-Fiber Roof Board			
	1/4" (6.6 mm)	**3/8" (9.5 mm)**	**1/2" (12.7 mm)**	**5/8" (15.9 mm)**
Width, standard	4' (1220 mm)	4' (1220 mm)	4' (1220 mm)	4' (1220 mm)
Length, standard	4' (1220 mm) and 8' (2440 mm)	4' (1220 mm) and 8' (2440 mm)	4' (1220 mm) and 8' (2440 mm)	4' (1220 mm) and 8' (2440 mm)
Pieces per unit for 4' x 8' sheets	50	40	30	24
Weight, nominal lbs./unit, 4' x 8' sheet	2,575	2,575	2,725	2,525
Weight, nominal lbs./sq. ft.	1.57	1.96	2.76	3.20
Flexural strength, parallel, lbs. min., per ASTM C 473	40	70	110	161
Compressive strength, psi nominal	1800	1800	1800	1800
Flute spannability per ASTM E 661	2-5/8"	5"	8"	10"
Permeance, perms, per ASTM E 96	30	26	26	24
R Value per ASTM C 518	0.2	0.3	0.5	0.6
Coefficient of thermal expansion, inches/inch • °F, per ASTM E 831	8.0×10^{-6}	8.0×10^{-6}	8.0×10^{-6}	8.0×10^{-6}
Linear variation with change in moisture, inches/inch • %RH, per ASTM D 1037	8.0×10^{-6}	8.0×10^{-6}	8.0×10^{-6}	8.0×10^{-6}
Water absorption, % max, per ASTM C 473	10	10	10	10
Surface water absorption, nominal grams, per ASTM C 473	1.6	1.6	1.6	1.6
Mold resistance per ASTM D 3273*	10	10	10	10
Bending Radius	25'	25'	25'	30'

***ASTMD3273 Mold Resistance Testing** - In independent lab tests conducted on USG Securock Gypsum-Fiber Roof Board and USG Securock Glass-Mat Roof Board at the time of manufacture per ASTM D3273 Standard Test Method for Resistance to Growth of Mold on the Surface of Interior Coatings in an Environmental Chamber, both panels scored a 10. The ASTM lab test may not accurately represent the mold performance of building materials in actual use. Given unsuitable project conditions during storage, installation or after completion, any building material can be overwhelmed by mold. To manage the growth of mold, the best and most cost-effective strategy is to protect building products from water exposure during storage and installation and after completion of the building. This can be accomplished by using good design and construction practices.

Submittal Approvals:

Job Name	
Contractor	**Date**

Product Information
See usg.com for the most up-to-date product information.

Trademarks
The trademarks Securock ®, the USG Logo ™ and related marks are trademarks of USG Corporation or its subsidiaries or affiliates.

Note
Products described here may not be available in all geographic markets. Consult your U.S. Gypsum Company sales office or representative for information.

Notice
We shall not be liable for incidental or consequential damages, directly or indirectly sustained, nor for any loss caused by application of these goods not in accordance with current printed instructions or for other than their intended use. Our liability is expressly limited to replacement of defective goods. Any claim shall be deemed waived unless made in writing to us within thirty (30) days from the date it was or reasonably should have been discovered.

Safety First!
Follow good safety and industrial hygiene practices during handling and installation of all products and systems. Take necessary precautions and wear the appropriate personal protective equipment as needed. Read material safety data sheets and related literature on products before specification and/or installation.

Manufactured by
United States Gypsum Company
550 West Adams Street
Chicago, IL 60661

800 USG.4YOU (874.4968)
usg.com

RF5/rev. 10-13
© 2013 USG Corporation.
Printed in U.S.A.

Mule-Hide Products Co., Inc.
1195 Prince Hall Dr.
Beloit, WI 53511

PRODUCT DATA SHEET
PDS 09-6325
Revision Date: Jan-2014

MULE-HIDE PVC COATED METAL

PRODUCT DESCRIPTION

Mule-Hide PVC Coated Metal is a 24-gauge galvanized steel sheet that is coated with a layer of 0.035" non-reinforced PVC flashing.

BASIC USES

PVC Coated Metal is cut into the appropriate width and used to fabricate metal drip edges or other roof perimeter edging profiles. PVC-c membrane may be welded directly to the coated metal edging, eliminating the need to strip in the metal with a separate piece of membrane.

TYPICAL PHYSICAL PROPERTIES

Typical Properties and Characteristics	
Sheet Size	4' x 10' (1.2m by 3.0 m)
Weight	1.1 lb/ft^2 (5.4 kg/m^2)
Color	White, Gray & Tan
Flashing Thickness	.035" (0.9 mm) nominal
Steel Thickness	.024" (0.6 mm) nominal (24 ga)
Steel Type	Hot Dipped Galvanized – G90 Conforms to ASTM A653
Packaging	10 sheets per pallet
Typical properties and characteristics are based on samples tested and are not guaranteed for all samples of this product. This data and information is intended as a guide and does not reflect the specification or specification range for any particular property of this product.	

BENEFITS & SUPPLEMENTAL STATEMENTS

- Allows direct welding of PVC membrane to metal
- Easy to cut and form for creating a variety of edge sizes and shapes

INSTALLATION INSTRUCTIONS

1. Install PVC coated metal with ⅛" to ¼" (3 to 6 mm) wide joints between adjoining sections.
2. Install 2" wide (5 cm) duct tape over joints in PVC metal (to act as a bond breaker).
3. Heat-weld 6" wide (15.5 cm) strip of PVC non-reinforced flashing membrane over joint.
4. Position PVC reinforced membrane and heat-weld to PVC clad metal achieving a min 1 ½" wide weld.
   Review Mule-Hide specifications and details for complete installation information.

STORAGE & HANDLING

Store coated metal in a cool, shaded area and cover with light-colored, breathable, waterproof tarpaulins.

PRECAUTIONS

PVC Coated Metal that has been exposed to the weather must be prepared with Weathered Membrane Cleaner prior to hot-air welding.

MULE-HIDE PVC COATED METAL

PROTECTION & SAFETY

Mule-Hide maintains Material Safety Data Sheets on all of its products. Material Safety Data Sheets contain health and safety information for your development of appropriate product handling procedures to protect your employees and customers. Mule-Hide's Material Safety Data Sheets should be read and understood by all of your supervisory personnel and employees before using Mule-Hide products in your facilities.

ADDITIONAL INFORMATION

The information given on this PDS is subject to change without notice. Always check the Mule-Hide website at www.mulehide.com for the latest information, changes and updates or contact Mule-Hide Products Company at 800-786-1492.

DISCLAIMER

The statements provided concerning the material shown are intended as a guide for material usage and are believed to be true and accurate at the time of printing. No statement made by anyone may supersede this information, except when done in writing by Mule-Hide Products Co., Inc. Since the manner of use is beyond our control, Mule-Hide does not authorize anyone to make any warranty of merchantability or fitness for any particular purpose or any other warranty, guarantee or representation, expressed or implied, concerning this material. This product may be eligible for a Mule-Hide warranty, please check the Mule-Hide website at www.mulehide.com or contact Mule-Hide directly at 800-786-1492 for details. Buyer and user accept the product under these conditions and assume the risk of any failure, any injury person or property (including that of the user), loss or liability resulting from the handling, storage or use of the product whether or not it is handled, stored or used in accordance with the directions or specifications. Mule-Hide must be notified in writing of any claims and be given the opportunity to inspect the alleged failure before repairs are made.

Mule-Hide Products Co., Inc.
1195 Prince Hall Dr.
Beloit, WI 53511

PRODUCT DATA SHEET
PDS 09-6410
Revision Date: Feb 2014

MULE-HIDE PVC WALKWAY ROLLS

PRODUCT DESCRIPTION

Mule-Hide PVC Walkway Rolls incorporate an aggressive, non-slip, diamond plate tread pattern of polyester reinforced PVC material that offers excellent tear and puncture resistance

BASIC USES

The Mule-Hide PVC Walkway Roll is designed to protect the PVC membrane in those areas exposed to repetitive foot traffic and other hazards. Mule-Hide specifications require the use of such a product in walkway concentration points (i.e., roof hatches, access doors, rooftop ladders, etc.) regardless of traffic frequency. Walkways must also be installed if regular maintenance (once a month or more) is necessary to service rooftop equipment.

SPECIFICATIONS

*Typical Properties		
Surface Texture:	N/A	Diamond Plate pattern
Material:	N/A	Polyester reinforced PVC
Thickness:	ASTM D412	Min. 0.072" (1.83 mm) Max.0.088" (2.24 mm)
Tensile Strength:	ASTM D638	600 psi (4.1 MPa)
Tear Strength:	ASTM D624	100 lbf/in (17.5 kN/m)
*Typical properties and characteristics are based on samples tested and are not guaranteed for all samples of this product. This data and information is intended as a guide and does not reflect the specification range for any particular property of this material		

LEED Information	
Pre-consumer Recycled Content	45%
Post-consumer Recycled Content	20%
Manufacturing Location	Mountain Top, PA
Solar Relectance Index (SRI)	N/A

COLORS

- Gray

PACKAGING

- Size: 36" wide x 60' long (91.4 cm x 18.3 m) – 95 lbs per roll
- Each roll is individually bagged.
- Nine rolls per skid.
- Store rolls in a clean, cool, dry location.

BENEFITS & SUPPLEMENTAL STATEMENTS

- Increased slip resistance with aggressive diamond plate tread design
- Superior weathering package for long term performance

INSTALLATION INSTRUCTIONS

SURFACE PREPARATION

1. If membrane or walkway roll has been exposed for over 7 days, use Weathered Membrane Cleaner and a Scotch-Brite Pad to prepare the area to be welded to the walkway material. Allow membrane cleaner to dry completely.

MULE-HIDE PVC WALKWAY ROLLS

INSTALLATION INSTRUCTIONS (continued)

APPLICATION

1. Position the walkway in desired location. Cut walkway rolls into maximum 10 (ten) foot lengths and position with a minimum 1-inch gap between adjacent pieces to allow for water drainage. Cut the walkway roll to allow for a minimum 4-inch gap over any field splice. (Since the attachment of the walkway roll is permanent, this will allow access to the field seams for future repairs).

2. Using an automated welder, weld all four sides of the walkway material to the membrane. (Welding temperature and speed is typically the same as used for the roofing membrane) A hand welder may be used but productivity will be reduced.

   Review Mule-Hide Specifications and Details for installation information.

PRECAUTIONS

1. Walkway rolls are a maintenance item and are not covered under the roofing warranty.

2. This product is intended to be utilized as a walkway only and is not designed as a perimeter warning line or substitution for ballast. Walkway rolls cannot be positioned within 10-feet of the roof perimeter.

3. Allowing walkway to relax and warm up in the sun light will facilitate installation.

PROTECTION & SAFETY

Mule-Hide maintains Material Safety Data Sheets on all of its products. Material Safety Data Sheets contain health and safety information for your development of appropriate product handling procedures to protect your employees and customers. Mule-Hide's Material Safety Data Sheets should be read and understood by all of your supervisory personnel and employees before using Mule-Hide products in your facilities.

ADDITIONAL INFORMATION

The information given on this PDS is subject to change without notice. Always check the Mule-Hide website at www.mulehide.com for the latest information, changes and updates or contact Mule-Hide Products Company at 800-786-1492.

DISCLAIMER

The statements provided concerning the material shown are intended as a guide for material usage and are believed to be true and accurate at the time of printing. No statement made by anyone may supersede this information, except when done in writing by Mule-Hide Products Co., Inc. Since the manner of use is beyond our control, Mule-Hide does not authorize anyone to make any warranty of merchantability or fitness for any particular purpose or any other warranty, guarantee or representation, expressed or implied, concerning this material. This product may be eligible for a Mule-Hide warranty, please check the Mule-Hide website at www.mulehide.com or contact Mule-Hide directly at 800-786-1492 for details. Buyer and user accept the product under these conditions and assume the risk of any failure, any injury person or property (including that of the user), loss or liability resulting from the handling, storage or use of the product whether or not it is handled, stored or used in accordance with the directions or specifications. Mule-Hide must be notified in writing of any claims and be given the opportunity to inspect the alleged failure before repairs are made.

Mule-Hide Products Co., Inc.
1195 Prince Hall Dr.
Beloit, WI 53511

PRODUCT DATA SHEET
PDS 09-6450
Revision Date: Oct 2011

MULE-HIDE RUBBER PAVER BLOCKS

PRODUCT DESCRIPTION

Mule-Hide Rubber Paver Blocks are an environmentally friendly product that provides superior protection to the underlying membrane. These Rubber Paver Blocks feature a resilient, shock-absorbing, weather-resistant traffic surface. Pavers lock together to provide multi-directional drainage patterns eliminating the need for protective mats.

BASIC USES

Used as a paver system for all Mule-Hide Membranes.

TYPICAL PHYSICAL PROPERTIES

Property	Test Method	Typical Characteristics
Dimensions @ 78ºF (26ºC)	N/A	24” x 24” ± ¼”
Weight	N/A	6 lbs per square foot
Water Surface Density	ASTM D3676	66 lbs per cubic foot
Coefficient of Thermal Expansion	N/A	1.10×10^{-3} in. / ft. / ºF
Tensile Strength	ASTM D412	107 psi
Elongation at Break	ASTM D412	165%
Tear Resistance	ASTM D624	33 lbs / in.
Abrasion Testing, Taber Abrader 1000 g. wt., 2000 cycles, H-21 wheel	ASTM D3389	0.75 g. loss
Resistance to Outdoor Ultraviolet Weathering	Xenon Arc, 500 hrs. exposure, 178ºF (81ºC), 50% relative humidity	85% tensile retention 100% elongation retention
Burning Pill Test	ASTM D2859	Pass
Freeze / Thaw Cycling	ASTM C67	No Deterioration

COLORS

Available in BLACK and TERRA COTTA

INSTALLATION INSTRUCTIONS

Mule-Hide Rubber Paver Blocks are installed over a completed roofing membrane. The pavers are loose laid and interlocked, offering superior protection to the membrane while still maintaining accessibility to the membrane. This system can be used over a variety of roofing systems and is ideal for those roofs that are prone to heavy maintenance traffic. The Mule-Hide Rubber Paver Blocks are not recommended for use in areas that are subject to small, narrow point loading, such as chairs with narrow legs or high heeled shoes.

PROTECTION & SAFETY

Mule-Hide maintains Material Safety Data Sheets on all of its products. Material Safety Data Sheets contain health and safety information for your development of appropriate product handling procedures to protect your employees and customers. Mule-Hide's Material Safety Data Sheets should be read and understood by all of your supervisory personnel and employees before using Mule-Hide products in your facilities.

ADDITIONAL INFORMATION

The information given on this PDS is subject to change without notice. Always check the Mule-Hide website at www.mulehide.com for the latest information, changes and updates or contact Mule-Hide Products Company at 800-786-1492.

MULE-HIDE RUBBER PAVER BLOCKS

DISCLAIMER

The statements provided concerning the material shown are intended as a guide for material usage and are believed to be true and accurate at the time of printing. No statement made by anyone may supersede this information, except when done in writing by Mule-Hide Products Co., Inc. Since the manner of use is beyond our control, Mule-Hide does not authorize anyone to make any warranty of merchantability or fitness for any particular purpose or any other warranty, guarantee or representation, expressed or implied, concerning this material. This product may be eligible for a Mule-Hide warranty, please check the Mule-Hide website at www.mulehide.com or contact Mule-Hide directly at 800-786-1492 for details. Buyer and user accept the product under these conditions and assume the risk of any failure, any injury person or property (including that of the user), loss or liability resulting from the handling, storage or use of the product whether or not it is handled, stored or used in accordance with the directions or specifications. Mule-Hide must be notified in writing of any claims and be given the opportunity to inspect the alleged failure before repairs are made.

Mule-Hide Products Co., Inc.
1195 Prince Hall Dr.
Beloit, WI 53511

PRODUCT DATA SHEET
PDS 09-6505
Revision Date: 08/27/09

MULE-HIDE HP PROTECTIVE MAT

PRODUCT DESCRIPTION

A nominal 6.0-ounce per square yard (140 grams per square meter) UV resistant polypropylene needle punched fabric.

BASIC USES

Can be used above the membrane as a slipsheet for crushed stone or pavers or below the membrane as a minimum underlayment mat for Mule-Hide's Mechanically-Attached or Ballasted System applications. Consult current specifications for underlayment requirements.

TYPICAL PHYSICAL PROPERTIES

Description	ASTM Test Method	Average Roll Values
Tensile Strength (Grab)	D 4632	160 lbs. (68 Kg)
Burst Strength (Mullen)	D 3786	350 psi (2413 kPa)
Elongation (Ultimate)	D 4632	> 50%
Puncture Strength	D 4833	90 lbs. (41 Kg)
Trapezoidal Tear	D 4533	65 lbs. (30 Kg)
UV Resistance (500 Hr St. Ref)	D 4355	> 70%
Permeability Coefficient	D 4491	0.2 cm/sec
pH Resistance		2 - 13
Thickness		0.65 in (1.65 mm)

PACKAGING

Packaged in rolls 15' x 300' (4.6m x 92m)
Coverage: 4500 SF (405 SM)
Weight per Roll: 210 lbs (83Kg)
Roll Diameter: 18 in (460 mm)

INSTALLATION INSTRUCTIONS

Mechanically Attached Roofing Systems: Install Mule-Hide HP Protective Mat over the substrate with all edges overlapped a minimum of 3" (75 mm). HP Protective Mat must be fastened to the roof deck with a minimum of one insulation fastener and plate per every 4 square feet.

Ballasted Roofing Systems: When specified under Mule-Hide roofing membrane, position the Mule-Hide HP Protective Mat loosely over the substrate with all edges overlapped a minimum of 6" (150 mm). The roofing membrane must be positioned to completely cover the previously installed HP Protective Mat.

The HP Protection Mat can also be installed on top of the Mule-Hide roofing membrane as a protection layer, typically under pavers or crushed stone. After completing all of the membrane and flashing seams, loosely lay the Mule-Hide HP Protective Mat over the membrane with the side laps overlapped a minimum of 6" (150 mm) and end laps overlapped 12" (300 mm). Prior to placement of ballast, extend the HP Protective Mat a minimum of 2" (50 mm) above the anticipated ballast level at the perimeter and penetrations, except at roof drains and scuppers.

The fabric must extend to drain bases and scupper openings but must not cover or restrict flow to the drains. Additional matting must be installed around penetrations to prevent direct contact between crushed stone and flashing.

MULE-HIDE HP PROTECTIVE MAT

INSTALLATION INSTRUCTIONS (Continued)

Note: Following placement of the fabric, install ballast, temporary ballast, or spot adhere with bonding adhesive to prevent the movement or displacement of unballasted fabric.

PROTECTION & SAFETY

This product is not hazardous as defined in CFR 1910.1200.
Dust may be irritating to respiratory tract and eyes.
Material is flammable. Do not expose to flame.

Mule-Hide maintains Material Safety Data Sheets on all of its products. Material Safety Data Sheets contain health and safety information for your development of appropriate product handling procedures to protect your employees and customers. Mule-Hide's Material Safety Data Sheets should be read and understood by all of your supervisory personnel and employees before using Mule-Hide products in your facilities.

ADDITIONAL INFORMATION

The information given on this PDS is subject to change without notice. Always check the Mule-Hide website at www.mulehide.com for the latest information, changes and updates or contact Mule-Hide Products Company at 800-786-1492.

DISCLAIMER

The statements provided concerning the material shown are intended as a guide for material usage and are believed to be true and accurate at the time of printing. No statement made by anyone may supersede this information, except when done in writing by Mule-Hide Products Co., Inc. Since the manner of use is beyond our control, Mule-Hide does not authorize anyone to make any warranty of merchantability or fitness for any particular purpose or any other warranty, guarantee or representation, expressed or implied, concerning this material. This product may be eligible for a Mule-Hide warranty, please check the Mule-Hide website at www.mulehide.com or contact Mule-Hide directly at 800-786-1492 for details. Buyer and user accept the product under these conditions and assume the risk of any failure, any injury person or property (including that of the user), loss or liability resulting from the handling, storage or use of the product whether or not it is handled, stored or used in accordance with the directions or specifications. Mule-Hide must be notified in writing of any claims and be given the opportunity to inspect the alleged failure before repairs are made.