SECTION 8

MULE-HIDE PRODUCTS CO., INC.

TPO STANDARD DETAILS

PLEASE CONSULT THE MULE-HIDE WEBSITE FOR THE MOST CURRENT INFORMATION AT WWW.MULEHIDE.COM

MULE-HIDE PRODUCTS CO., INC.
TPO STANDARD DETAILS

TABLE OF CONTENTS

Mechanically Attached Sheet Layout
Field Membrane Layout MHT-MA-101A
Field Membrane Layout - RUSS..... MHT-MA-101B
Perimeter Attachment – Option 1 ..... MHT-MA-102A
Perimeter Attachment – Option 2 ..... MHT-MA-102B
Buildings with Large Wall Openings MHT-MA-103A
Buildings with Overhangs MHT-MA-103B
Roof Perimeter Calculation MHT-UN-108A
Roof Perimeter Calculation..... MHT-UN-108B
FM Perimeter/Corner – Option A..... MHT-FM-308A
FM Perimeter/Corner – Option B..... MHT-FM-308B

Laps
Field Seam Attachment MHT-MA-104A
Field Seam - Plate Position MHT-MA-104B
End Laps..... MHT-UN-104C
Field Seam – Fully Adhered MHT-FA-104D
End Laps – **Fleece & Self Adhering** .. MHT-FA-104E
"T-Joint" Detail - .045"..... MHT-UN-105A
"T'-Joint" Cover - .060" or Thicker MHT-UN-105B*
Field/Wall Seam Transition Patch MHT-UN-105C*

Roof Edge Treatment
Drip Edge – TPO Coated Metal..... MHT-FA-106A*
Drip Edge - TPO PS Cover Strip MHT-UN-106B*
Drip Edge – EPDM Cover Strip MHT-UN-106C*
Tapered Edge/Gravel Stop..... MHT-UN-201*
Snap-on Fascia w/spring Clips MHT-UN-202A*
Snap-on Fascia..... MHT-UN-202B*
Anchor-Tite Fascia System MHT-UN-204*
Fascia/Drip Edge System MHT-UN-205*
All-Purpose Bar - Edge Termination.... MHT-UN-206*
Gravel Stop - TPO Coated Metal..... MHT-UN-211*
Gravel Stop - TPO Coated Metal..... MHT-UN-212
Gravel Stop Joint Detail - TPO Metal .. MHT-UN-213
Thru-wall Scupper - TPO Metal MHT-UN-220A
Thru-wall Scupper - TPO Metal MHT-UN-220B*
Thru-wall Scupper – New Metal MHT-UN-220C*
Thru-wall Open Scupper - TPO Metal . MHT-UN-221*
Gravel Stop Scupper – TPO Metal..... MHT-UN-222
Gutter Drip Edge - TPO Metal MHT-UN-232
Gutter/Termination Bar - Recover MHT-UN-234*
Edge Termination - All-Purpose Bar.... MHT-UN-240*

Parapet
Parapet Wall Detail - New Coping..... MHT-UN-301
Parapet Wall - Existing Coping..... MHT-UN-302
Insulated Parapet Wall..... MHT-UN-303
Base Attachment w/Plates&Fasteners MHT-UN-305A
Base Attachment w/RUSS..... MHT-UN-305B
Base Attachment – **Self Adhering**..... MHT-FA-305C
Counterflashing Detail MHT-UN-310*
Base Flashing at Siding..... MHT-UN-311
Wall Flashing w/M-H All-Purpose Bar . MHT-UN-312
Door Threshold - Wall Flashing MHT-UN-321
Base Attachment w/A-P Bar MHT-UN-330

Expansion Joints
Expansion Joint Detail MHT-UN-401
Expansion Joint - Curb MHT-UN-402
Expansion Joint - Wall Detail..... MHT-UN-403
Expansion Joint Detail MHT-UN-404A
Expansion Joint Detail MHT-UN-404B

Curb Flashing
Curb/Wall Flashing w/A-P Bar MHT-UN-502*
Curb Flashing MHT-UN-503
Curb Flashing - **Fleece/Self Adhering** MHT-UN-503A

Roof Drains
Drain Flashing - Tapered Insulation MHT-UN-510A
Drain Flashing w/Target..... MHT-MA-510B
Drain Flashing w/Target – **Fleece** MHT-FA-510C
Drain Flashing w/Target – **Fleece/SA** . MHT-FA-510D
Drain Flashing w/Target Panels MHT-UN-511A
Drain Flashing w/Target (page 1 of 2) . MHT-UN-511B1
Drain Flashing w/Target (page 2 of 2) . MHT-UN-511B2
Retrofit Drain Insert..... MHT-UN-512

Pipe/Penetration Flashings
Pre-molded Pipe Boot..... MHT-UN-520
Field Fabricated Pipe w/ Band Clamp . MHT-UN-521A
Field Fabricated Pipe w/Seam Tape ... MHT-UN-521B
TPO Split Pipe Boot..... MHT-UN-521C
Hot Pipe Flashing w/Cold Sleeve MHT-UN-522
I-Beam Support Flashing..... MHT-UN-523
Multiple Pipe Penetration..... MHT-UN-525
Pitch Pan TPO Coated Metal MHT-UN-526
TPO Molded Sealant Pocket MHT-UN-527
Square Tubing Wrap..... MHT-UN-528
Wood Sleeper Detail..... MHT-UN-530
Fixed Equipment Support MHT-UN-531

* = Approved for 20-year warranties

MULE-HIDE PRODUCTS CO., INC.
TPO STANDARD DETAILS

TABLE OF CONTENTS

Valley/Ridge Flashing
Valley Flashing MHT-MA-601A*
Valley Flashing - RUSS MHT-MA-601B*
Valley Flashing MHT-FA-601C*
Valley Flashing - RUSS MHT-FA-601D*
Ridge Flashing..... MHT-MA-602A
Ridge Flashing MHT-FA-602B

TPO Tie-ins
Tie-in To Solid Deck w/Curb..... MHT-UN-609
Tie-in To Existing BUR/MB Roof MHT-UN-610A
Tie-in - Existing BUR MHT-UN-610B
Tie-in - Existing EPDM or Hypalon MHT-UN-610C
Tie-in - Shingle Roof..... MHT-UN-611A
Tie-in - Shingle Roof - RUSS..... MHT-UN-611B

Miscellaneous
Lightning Cable Strap MHT-UN-621
Lightning Rod Base MHT-UN-622A
Lightning Rod Detail MHT-UN-622B
Lightning Rod Wall Support..... MHT-UN-623
Termination Details..... MHT-UN-624

TPO Corner Flashings
Inside Corner Flashing..... MHT-UN-640A
Inside Corner Flashing w/RUSS..... MHT-UN-640B
Field Fabricated Inside Corner MHT-UN-640C
Field Fabricated Outside Corner MHT-UN-641A
TPO Universal Corner - Outside..... MHT-UN-641B

Insulation Attachment
Extruded Polystyrene Insulations MHT-MA-700
Insulation Attachment Patterns..... MHT-MA-701
Mule-Hide – 8 Field Fasteners. MHT-FA-720
Mule-Hide – 12 Field Fasteners. MHT-FA-721
Mule-Hide – 16 Field Fasteners MHT-FA-722
Mule-Hide – 17 Field Fasteners MHT-FA-723
Factory Mutual - 8 Field Fasteners..... MHT-FM-724
Factory Mutual - 12 Field Fasteners..... MHT-FM-725
Factory Mutual - 16 Field Fasteners..... MHT-FM-726
Factory Mutual - 17 Field Fasteners..... MHT-FM-727

PLEASE CONSULT THE MULE-HIDE WEBSITE FOR THE MOST CURRENT INFORMATION AT WWW.MULEHIDE.COM

* = Approved for 20-year warranties

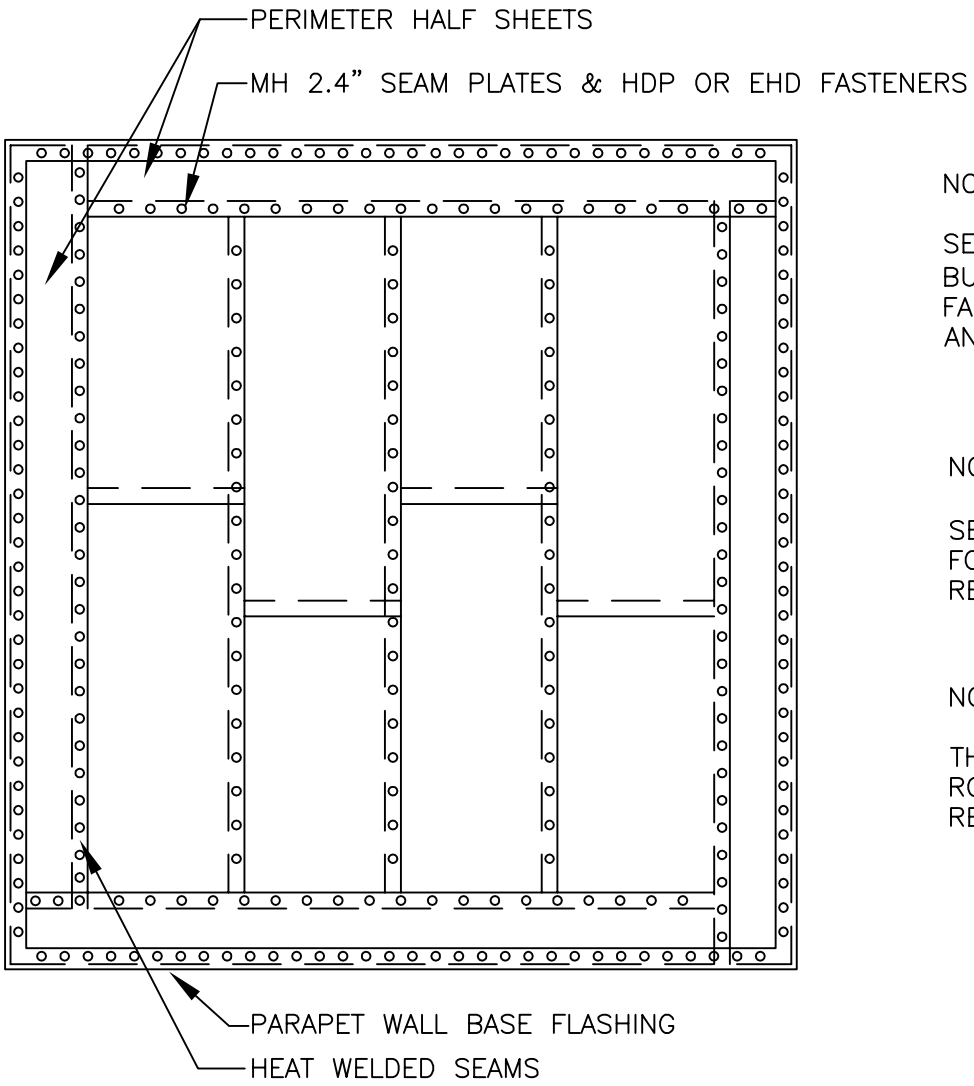

NOTE:

SEE TPO MEMBRANE FASTENING TECHNICAL BULLETIN #TPO–MA01–2006 FOR APPROPRIATE FASTENER SPACING FOR VARIOUS DECK TYPES AND WIND UPLIFT REQUIREMENTS.

NOTE:

SEE TECHNICAL BULLETIN #TPO–MA02–2006 FOR PERIMETER ENHANCEMENT REQUIREMENTS.

NOTE:

THIS DETAIL IS NOT APPROVED OVER STEEL ROOF DECKS. FOR STEEL ROOF DECKS, REFER TO DETAILS MHT–FM–308A OR B,

MULE-HIDE PRODUCTS CO., INC.	**FIELD MEMBRANE LAYOUT PERIMETER HALF SHEET OPTION**	**DETAIL NO.:**
	SYSTEMS:	**MHT-MA-101A**
	MECHANICALLY ATTACHED	REVISION DATE: 10/2013

®

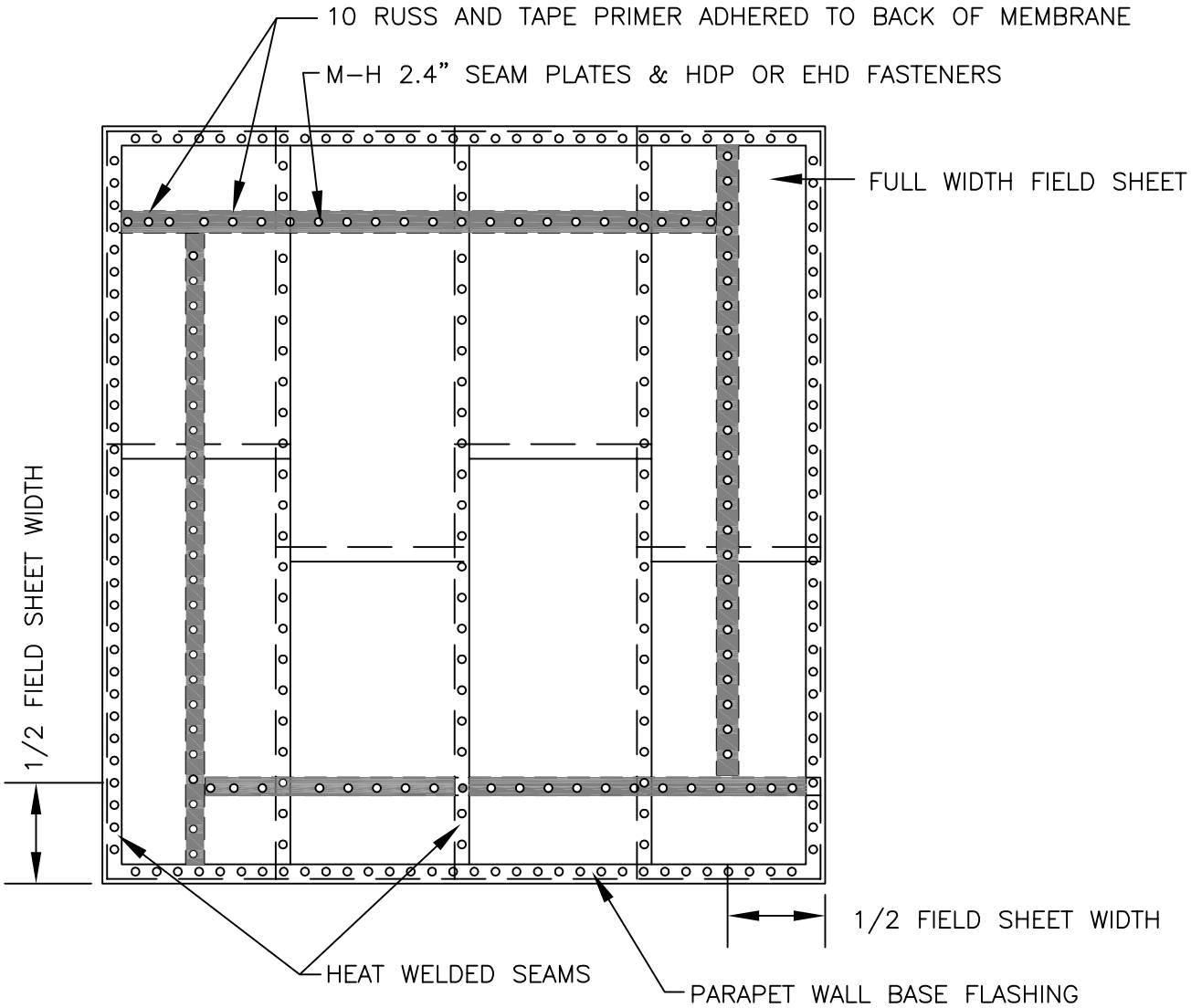

NOTE:

SEE TPO MEMBRANE FASTENING TECHNICAL BULLETIN #TPO–MA01–2006 FOR APPROPRIATE FASTENER SPACING FOR VARIOUS DECK TYPES AND WIND UPLIFT REQUIREMENTS.

SEE TECHNICAL BULLETIN #TPO–MA02–2006 FOR PERIMETER ENHANCEMENT REQUIREMENTS.

NOTE:

RUSS PRODUCTS CANNOT BE USED ON FLEECEBACK OR SELF ADHERING MEMBRANES

NOTE:

THIS DETAIL IS NOT APPROVED OVER STEEL ROOF DECKS. FOR STEEL ROOF DECKS, REFER TO DETAIL MHT–FM–308A.

MULE-HIDE PRODUCTS CO., INC.	**PERIMETER SECUREMENT 10" RUSS STRIP**	**DETAIL NO.:**
	SYSTEMS:	**MHT-MA-101B**
	MECHANICALLY ATTACHED	REVISION DATE: 10/2013

®

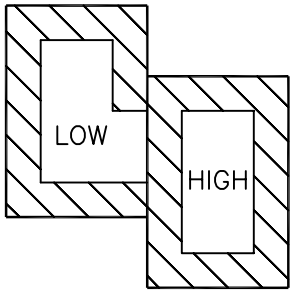

PERIMETER AREA

ROOF HEIGHT DIFFERENTIAL GREATER THAN 3'

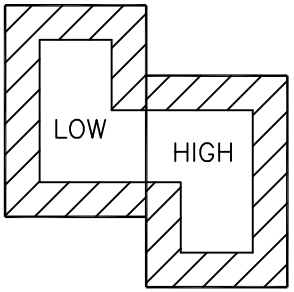

PERIMETER AREA

ROOF HEIGHT DIFFERENTIAL LESS THAN 3'

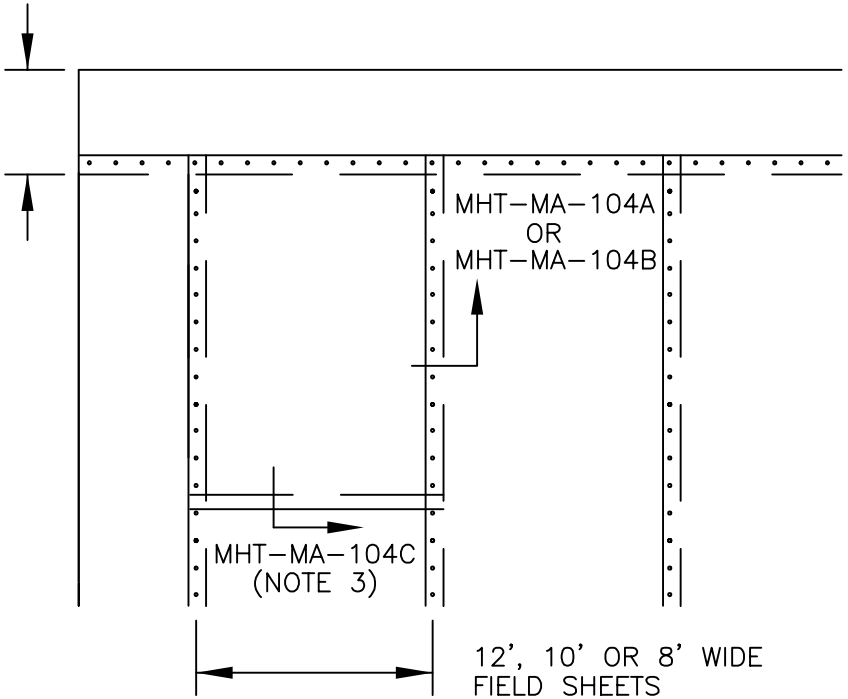

NOTES:

1. REFER TO MULE-HIDE TECHNICAL BULLETIN #TPO-MA02-2006 FOR MINIMUM PERIMETER ENHANCEMENT REQUIREMENTS.
2. CONTACT MULE-HIDE FOR FM OR CODE COMPLIANCE FOR REQUIRED NUMBER OF PERIMETER HALF SHEETS AND MEMBRANE FASTENING.
3. SECUREMENT NOT REQUIRED AT END LAPS; OVERLAP MEMBRANE 2" TO 3". REFER TO DETAIL MHT-UN-104C.
4. FOR INSULATION SECUREMENT, REFER TO MHT-MA-700 AND MHT-MA-701 DETAILS.
5. IF A FACTORY MUTUAL RATING IS REQUIRED, CONTACT MULE-HIDE TECHNICAL DEPARTMENT FOR CORNER REQUIREMENTS.
6. THIS OPTION IS NOT TO BE USED ON STEEL DECKS. REFER TO DETAIL MHT-FM-108A.

MULE-HIDE PRODUCTS CO., INC.	**PERIMETER ATTACHMENT OPTION 1 - PERIMETER HALF SHEETS**	**DETAIL NO.:**
	SYSTEMS:	**MHT-MA-102A**
	MECHANICALLY ATTACHED	REVISION DATE: 10/2013

®

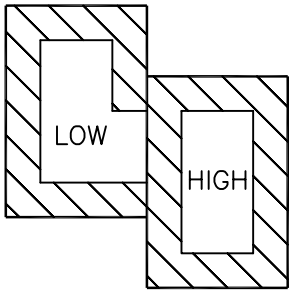

PERIMETER AREA

ROOF HEIGHT DIFFERENTIAL GREATER THAN 3'

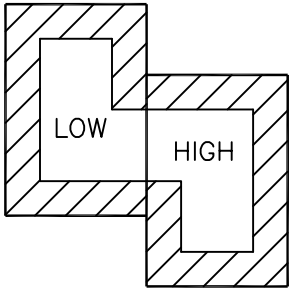

PERIMETER AREA

ROOF HEIGHT DIFFERENTIAL LESS THAN 3'

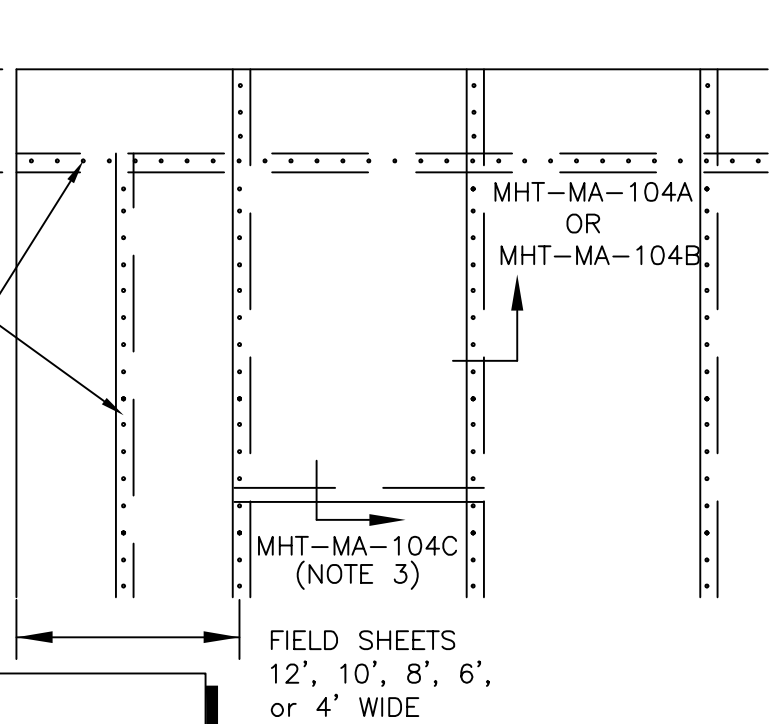

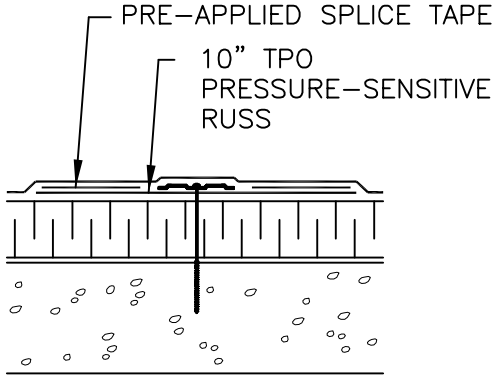

NOTES:

1. PLACE 10" RUSS STRIP IN CENTER OF FIELD SHEET. REFER TO TECHNICAL BULLETIN #MA–02–2006 FOR PERIMETER ENHANCEMENT REQUIREMENTS.
2. CONTACT MULE–HIDE FOR FM OR CODE COMPLIANCE FOR REQUIRED NUMBER OF 10" RUSS STRIPS AND MEMBRANE FASTENING.
3. SECUREMENT NOT REQUIRED AT END LAPS; OVERLAP MEMBRANE 2" TO 3". REFER TO DETAIL MHT–UN–104C.
4. FOR INSULATION SECUREMENT, REFER TO MHT–MA–700 AND MHT–MA–701 DETAILS.
5. IF A FACTORY MUTUAL RATING IS REQUIRED, CONTACT MULE–HIDE TECHNICAL DEPARTMENT FOR CORNER REQUIREMENTS.
6. RUSS PRODUCTS CANNOT BE USED WITH FLEECEBACK OR SELF ADHERING MEMBRANES.
7. THIS OPTION IS NOT TO BE USED ON STEEL DECKS. REFER TO DETAIL MHT–FM–108A.

MULE-HIDE PRODUCTS CO., INC.	**PERIMETER ATTACHMENT - OPTION 2** **10" RUSS STRIP ALTERNATE** **SYSTEMS:** **MECHANICALLY ATTACHED**	**DETAIL NO.:** **MHT-MA-102B** REVISION DATE: 10/2013

®

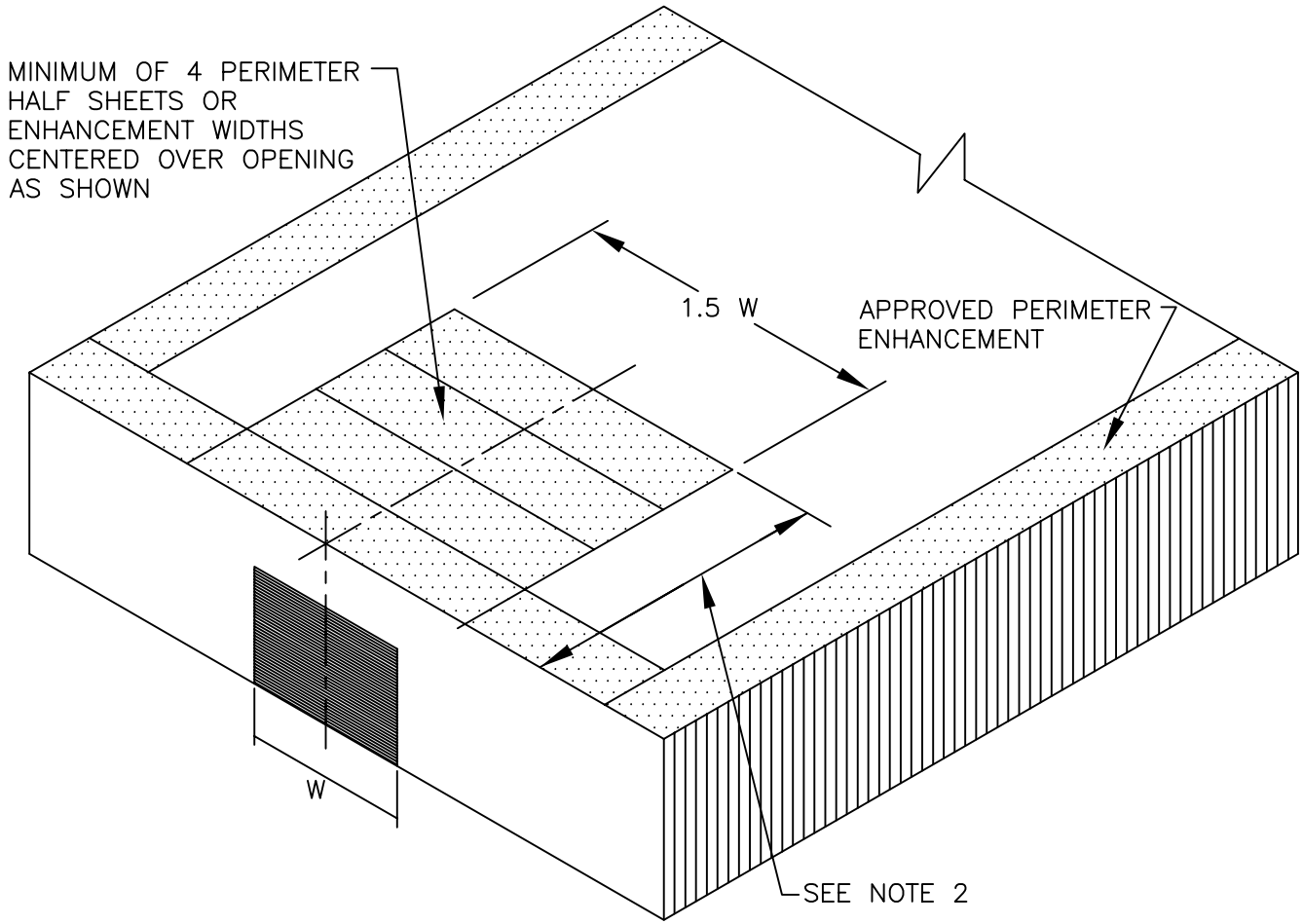

NOTES:

1. WHEN ANY WALL CONTAINS MAJOR OPENINGS WITH A COMBINED AREA WHICH EXCEEDS 10% OF THE TOTAL WALL AREA ON WHICH THE OPENINGS ARE LOCATED, A MINIMUM OF 4 PERIMETER HALF SHEETS OR ENHANCEMENT WIDTHS MUST BE CENTERED OVER THE OPENING.

2. THE DEPTH OF THE PERIMETER ENHANCEMENT MUST BE A MINIMUM OF 2.5 TIMES THE WIDTH OF THE OPENING OR 4 PERIMETER HALF SHEETS/ENHANCEMENT WIDTHS, WHICHEVER IS LARGER.

3. AS AN OPTION, AN ADHERED MEMBRANE SECTION MAY BE USED IN LIEU OF THE MECHANICALLY FASTENED MEMBRANE AT LARGE OPENINGS IN ACCORDANCE WITH THE MULE-HIDE FULLY ADHERED TPO ROOF YSTEM SPECIFICATION.

4. REFER TO TECHNICAL BULLETIN #TPO-MA02-2006 FOR PERIMETER ENHANCEMENT REQUIREMENTS.

MULE-HIDE PRODUCTS CO., INC.	**SHEET LAYOUT ON BUILDINGS WITH LARGE OPENINGS**	**DETAIL NO.:**
	SYSTEMS:	**MHT-MA-103A**
	MECHANICALLY ATTACHED	REVISION DATE: 10/2013

®

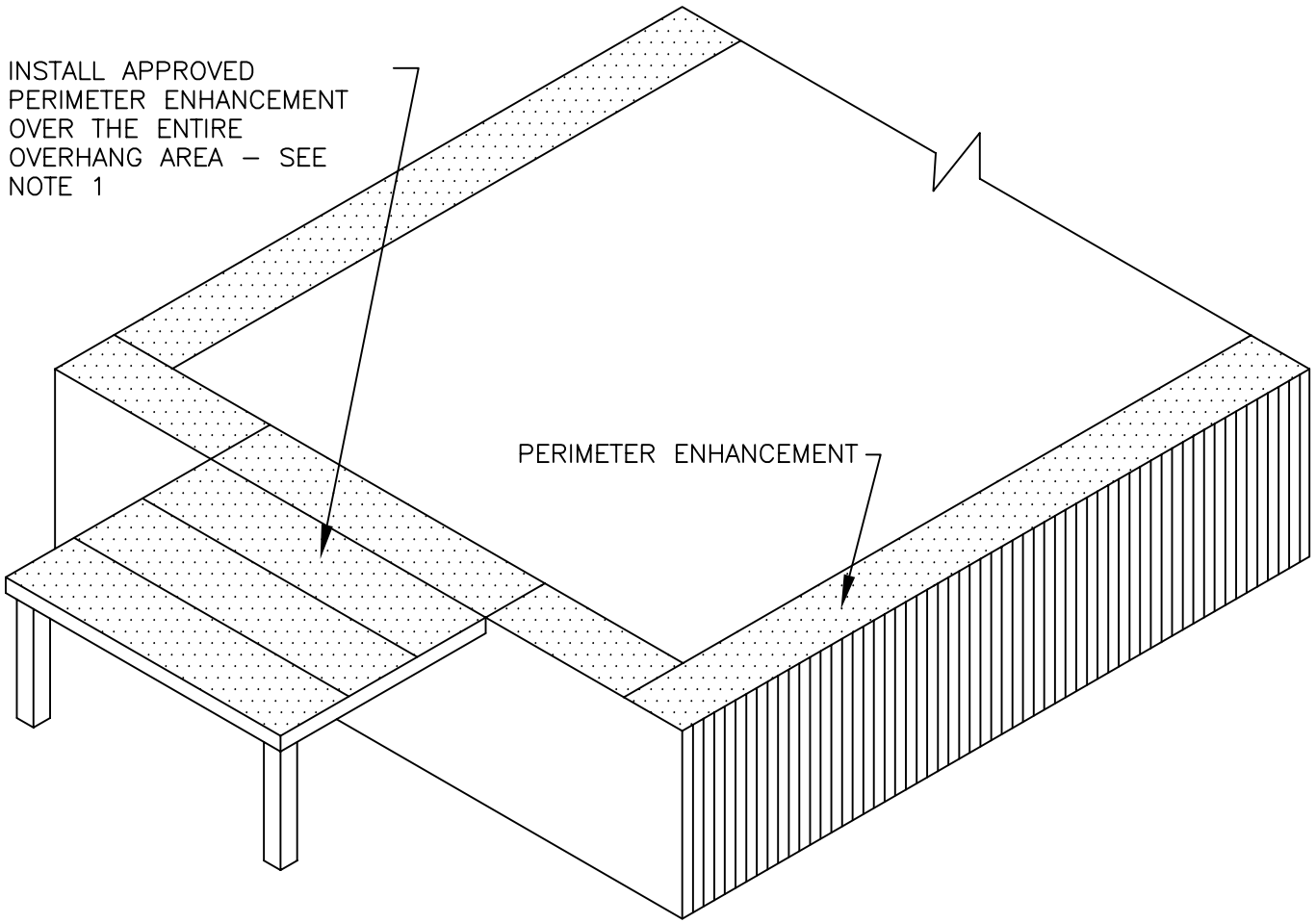

NOTES:

1. THE MEMBRANE MUST BE SPECIFIED WITH PERIMETER ENHANCEMENT INSTALLED OVER THE ENITIRE OVERHANG AREA. WHEN THE OVERHANG IS AT THE SAME LEVEL AS THE MAIN ROOF, EXTEND THE PERIMETER ENHANCEMENT ONTO THE MAIN ROOF LEVEL AS SHOWN.

2. AS AN OPTION, AN ADHERED MEMBRANE SECTION MAY BE USED IN LIEU OF THE MECHANICALLY FASTENED MEMBRANE AT BUILDING OVERHANGS IN ACCORDANCE WITH THE MULE–HIDE FULLY ADHERED TPO ROOF YSTEM SPECIFICATION.

3. REFER TO TECHNICAL BULLETIN #TPO–MA02–2006 FOR PERIMETER ENHANCEMENT REQUIREMENTS.

MULE-HIDE PRODUCTS CO., INC.	**SHEET LAYOUT ON BUILDINGS WITH OVERHANGS** **SYSTEMS:** **MECHANICALLY ATTACHED**	**DETAIL NO.:** **MHT-MA-103B** REVISION DATE: 10/2013

®

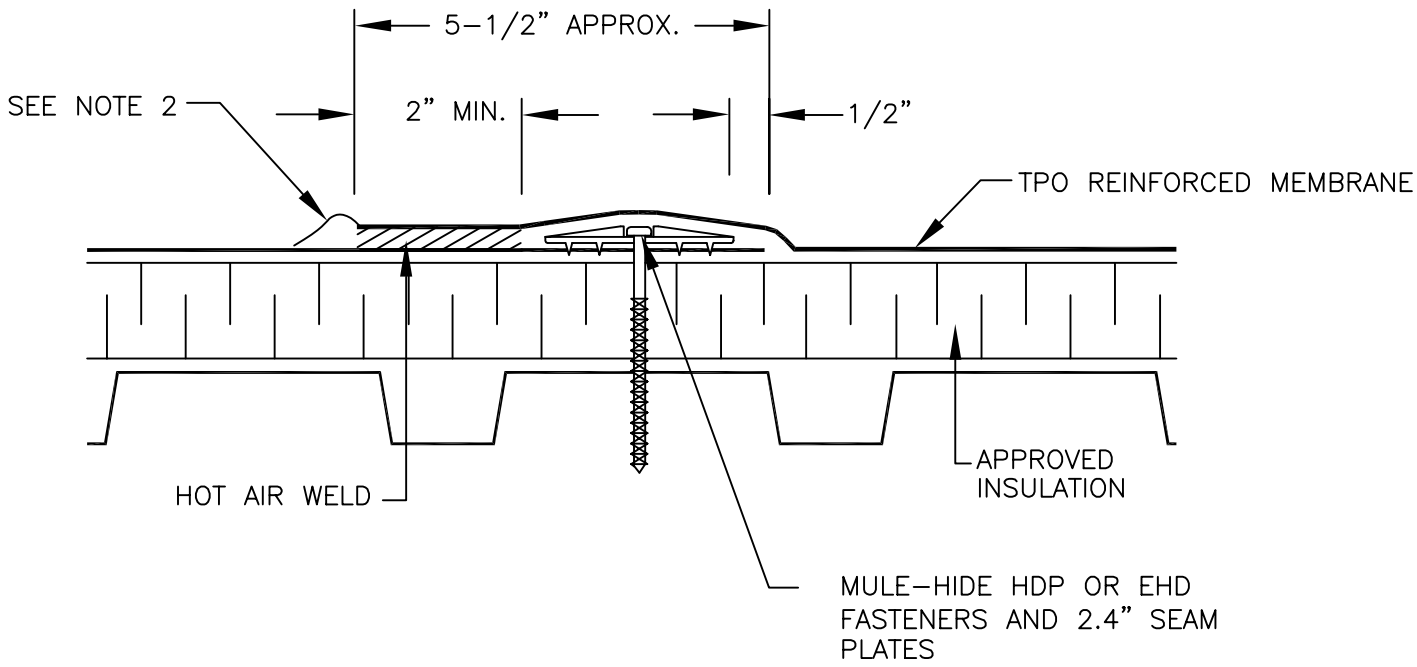

NOTES:

1. REFER TO MULE-HIDE TECHNICAL BULLETIN TPO-MA01-2006 FOR SHEET SIZE AND FASTENER SIZE REQUIRED FOR UPLIFT RESISTANCE. IF A FACTORY MUTUAL RATING OR CODE COMPLIANCE IS REQUIRED, CONTACT MULE-HIDE FOR SPECIFIC REQUIREMENTS.

2. APPROXIMATELY 1/8" DIAMETER BEAD OF CUT-EDGE SEALANT IS REQUIRED ON CUT EDGES OF TPO REINFORCED MEMBRANE.

3. A ROBOTIC WELDER MUST BE USED TO COMPLETE ALL FIELD SEAMS ON ALL WARRANTED PROJECTS.

MULE-HIDE PRODUCTS CO., INC.	**FIELD SEAM ATTACHMENT**	**DETAIL NO.:**
	SYSTEMS:	**MHT-MA-104A**
	MECHANICALLY ATTACHED	REVISION DATE: 10/2013

®

NOTE:

1. REFER TO MULE–HIDE TECHNICAL BULLETIN TPO–MA01–2006 FOR SHEET SIZE, FASTENER TYPE AND SIZE AND SPACING REQUIRED FOR UPLIFT RESISTANCE. IF A FACTORY MUTUAL RATING OR CODE COMPLIANCE IS REQUIRED, CONTACT MULE–HIDE FOR SPECIFIC REQUIREMENTS.

2. POSITION 2.4" SEAM PLATES 1/2" FROM EDGE OF MEMBRANE.

3. A ROBOTIC WELDER MUST BE USED TO COMPLETE ALL FIELD SEAMS ON ALL WARRANTED PROJECTS.

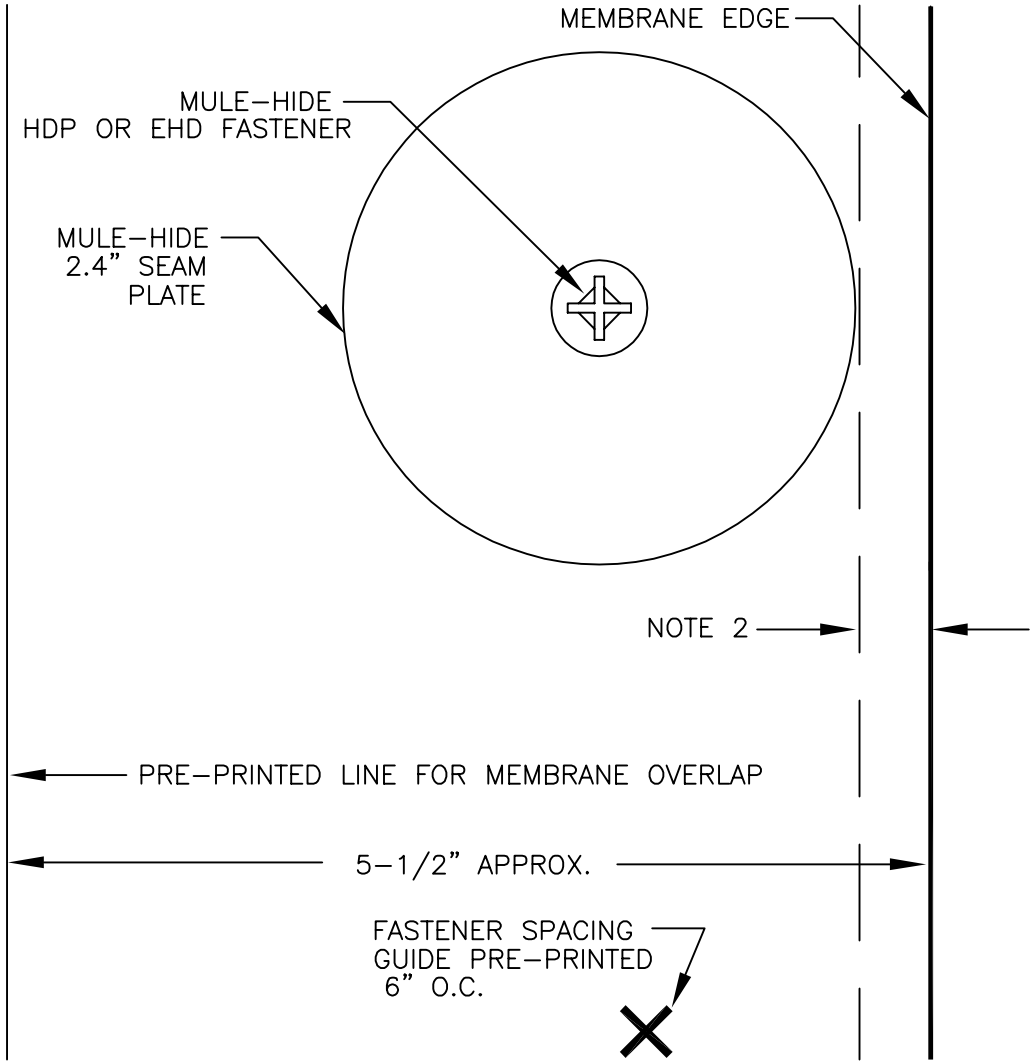

MULE-HIDE PRODUCTS CO., INC.	**FIELD SEAM - PLATE POSITION**	**DETAIL NO.:**
	SYSTEMS:	**MHT-MA-104B**
	MECHANICALLY ATTACHED	REVISION DATE: 10/2013

®

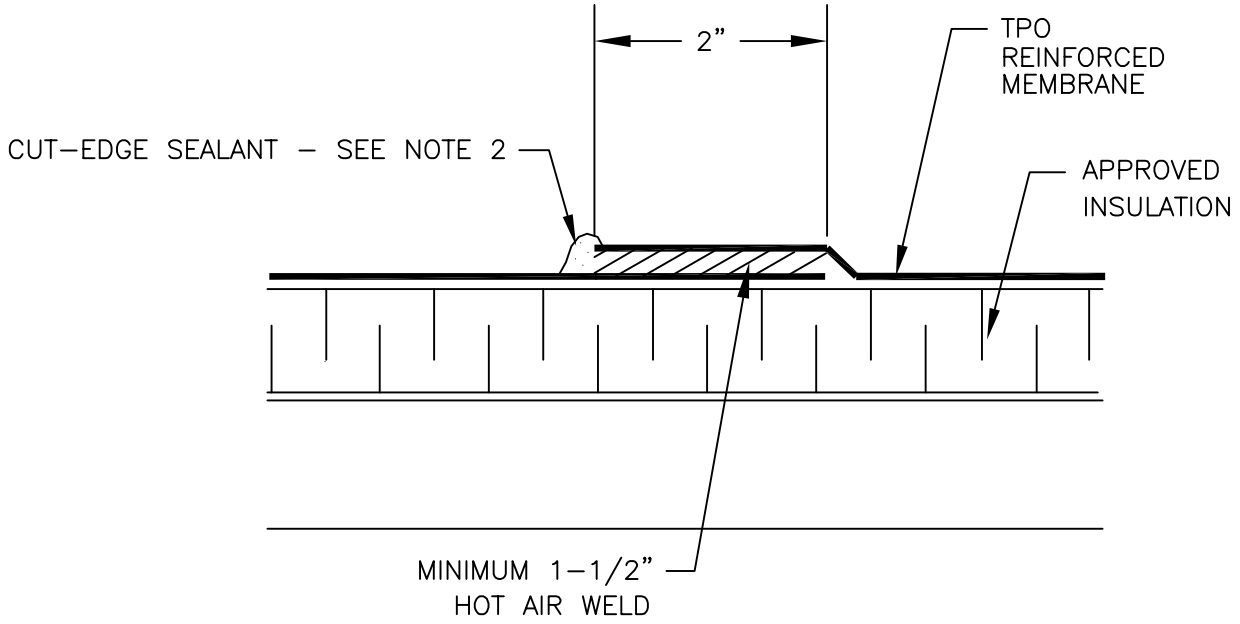

NOTE:

1. IT IS NOT NECESSARY TO FASTEN MEMBRANE AT END LAPS.
2. APPROXIMATELY 1/8" DIAMETER BEAD OF CUT–EDGE SEALANT IS REQUIRED ON CUT EDGES OF TPO REINFORCED MEMBRANE.

MULE-HIDE PRODUCTS CO., INC.	**END LAPS**	**DETAIL NO.:**
	SYSTEMS: ALL TPO SYSTEMS EXCEPT FLEECEBACK AND SELF ADHERING	**MHT-UN-104C**
		REVISION DATE: 10/2013

®

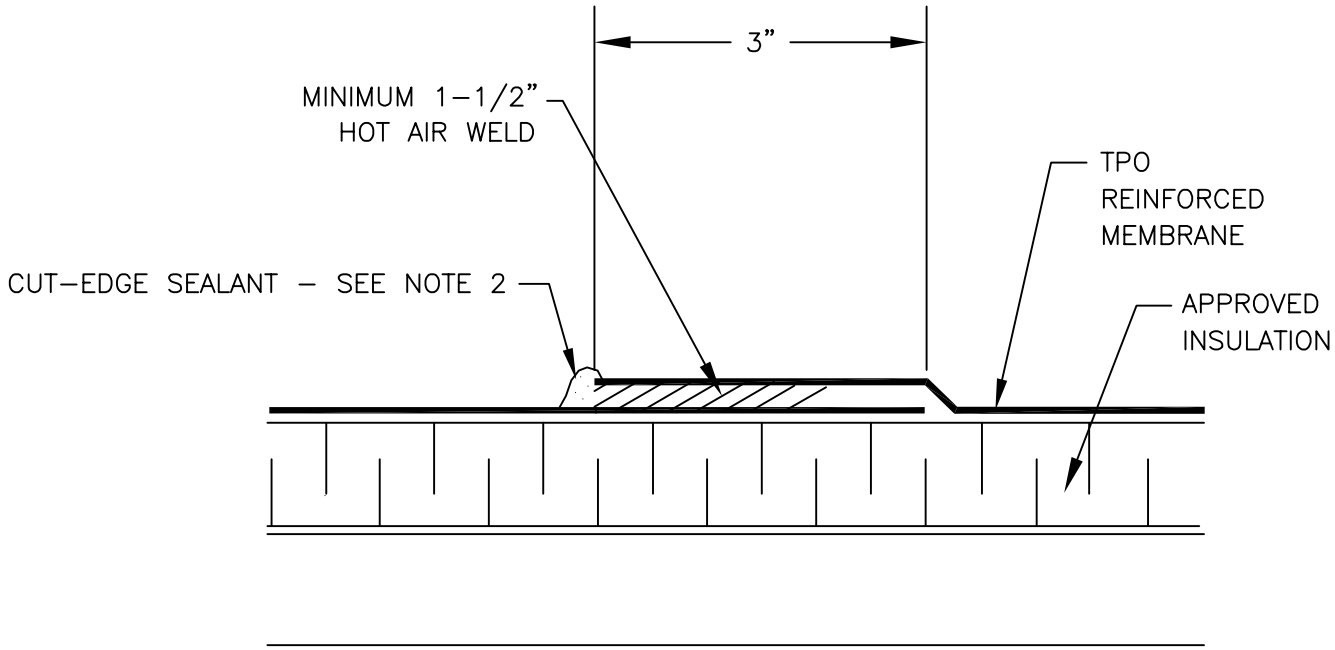

NOTE:

1. APPROXIMATELY 1/8" DIAMETER BEAD OF CUT-EDGE SEALANT IS REQUIRED ON CUT EDGES OF TPO REINFORCED MEMBRANE.

2. A ROBOTIC WELDER MUST BE USED TO COMPLETE ALL FIELD SEAMS ON ALL WARRANTED PROJECTS.

MULE-HIDE PRODUCTS CO., INC.	**FIELD SEAM**	**DETAIL NO.:**
	SYSTEMS:	**MHT-FA-104D**
	FULLY ADHERED	REVISION DATE: 10/2013

®

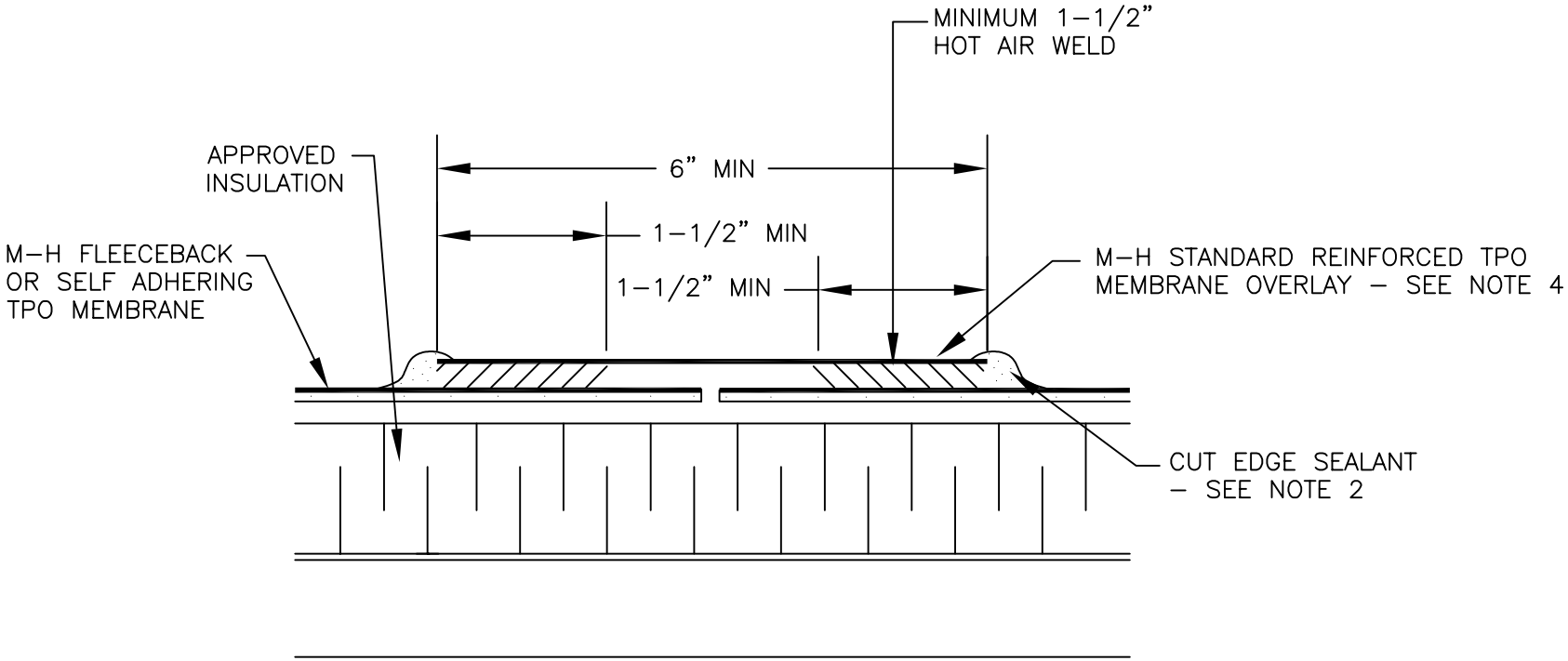

NOTE:

1. IT IS NOT NECESSARY TO FASTEN MEMBRANE AT END LAPS.
2. APPROXIMATELY 1/8" DIAMETER BEAD OF CUT–EDGE SEALANT IS REQUIRED ON CUT EDGES OF TPO REINFORCED MEMBRANE.
3. A ROBOTIC WELDER MUST BE USED TO COMPLETE ALL FIELD SEAMS ON ALL WARRANTED PROJECTS.
4. THICKNESS OF STANDARD REINFORCED TPO MEMBRANE TO MATCH THICKNESS OF FLEECEBACK OR SELF ADHERING TPO MEMBRANE.

MULE-HIDE PRODUCTS CO., INC.	**FLEECE BACK END LAPS**	**DETAIL NO.:**
	SYSTEMS:	**MHT-UN-104E**
	ALL TPO FLEECE BACK AND SELF ADHERING	REVISION DATE: 10/2013

®

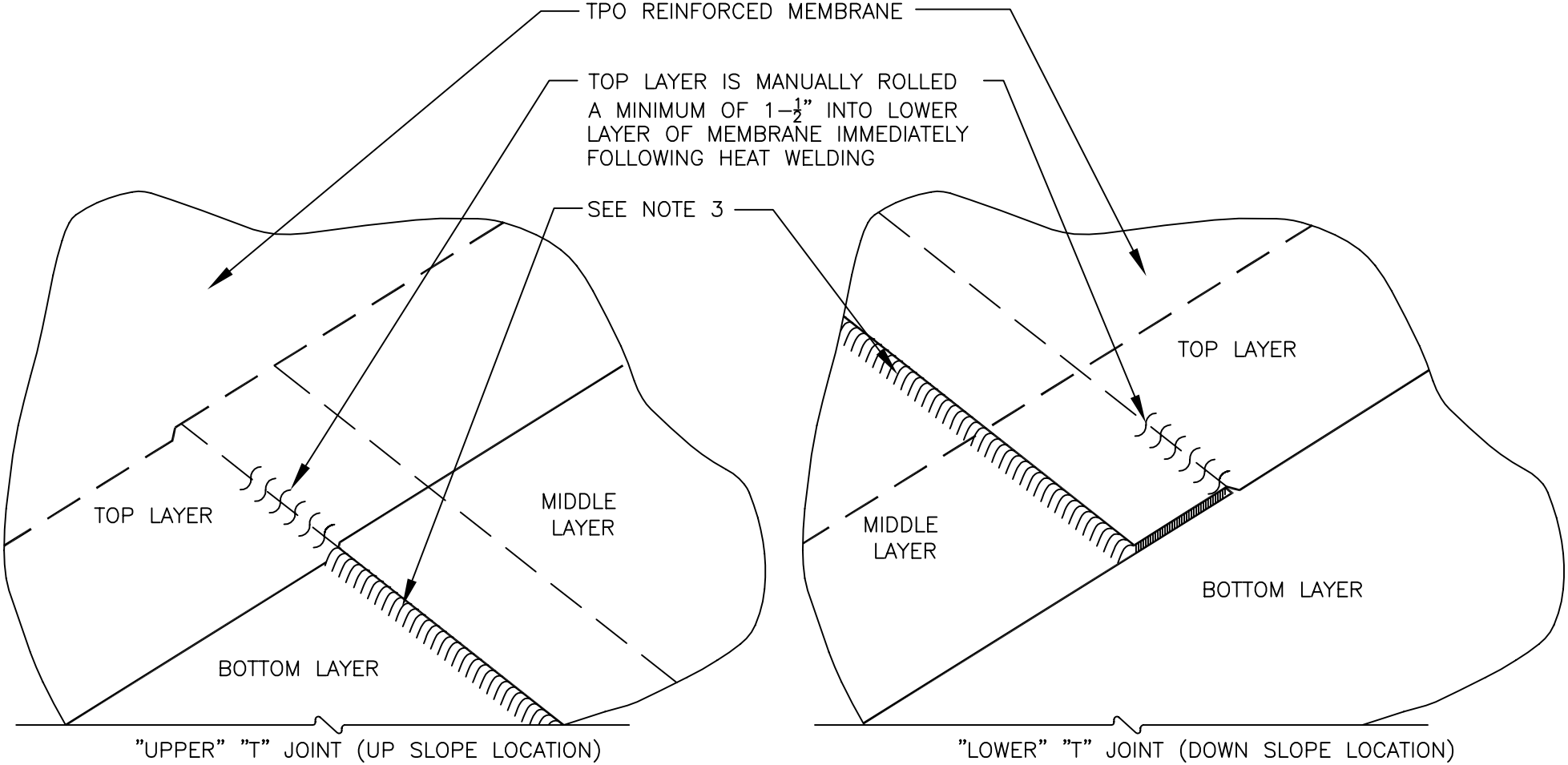

NOTES:

1. DETAIL TO BE USED IN CONJUCTION WITH STANDARD GUIDE SPECIFICATION CONTAINING REQUIREMENTS FOR NAILERS, INSULATION, ETC.
2. HEAT GUN MUST BE USED TO FORM MEMBRANE CREASE.
3. APPROXIMATELY ⅛" DIAMETER BEAD OF CUT EDGE SEALANT IS REQUIRED ON CUT EDGES OF TPO REINFORCED MEMBRANE.
4. THIS DETAIL IS NOT APPROVED FOR USE IN WARRANTIES LONGER THAN 15 YEARS.

MULE-HIDE PRODUCTS CO., INC.	**"T" JOINT DETAIL .045" (45 MIL) THICK MEMBRANES**	**DETAIL NO.:**
	SYSTEMS:	**MHT-UN-105A**
	ALL TPO SYSTEMS	REVISION DATE: 10/2013

®

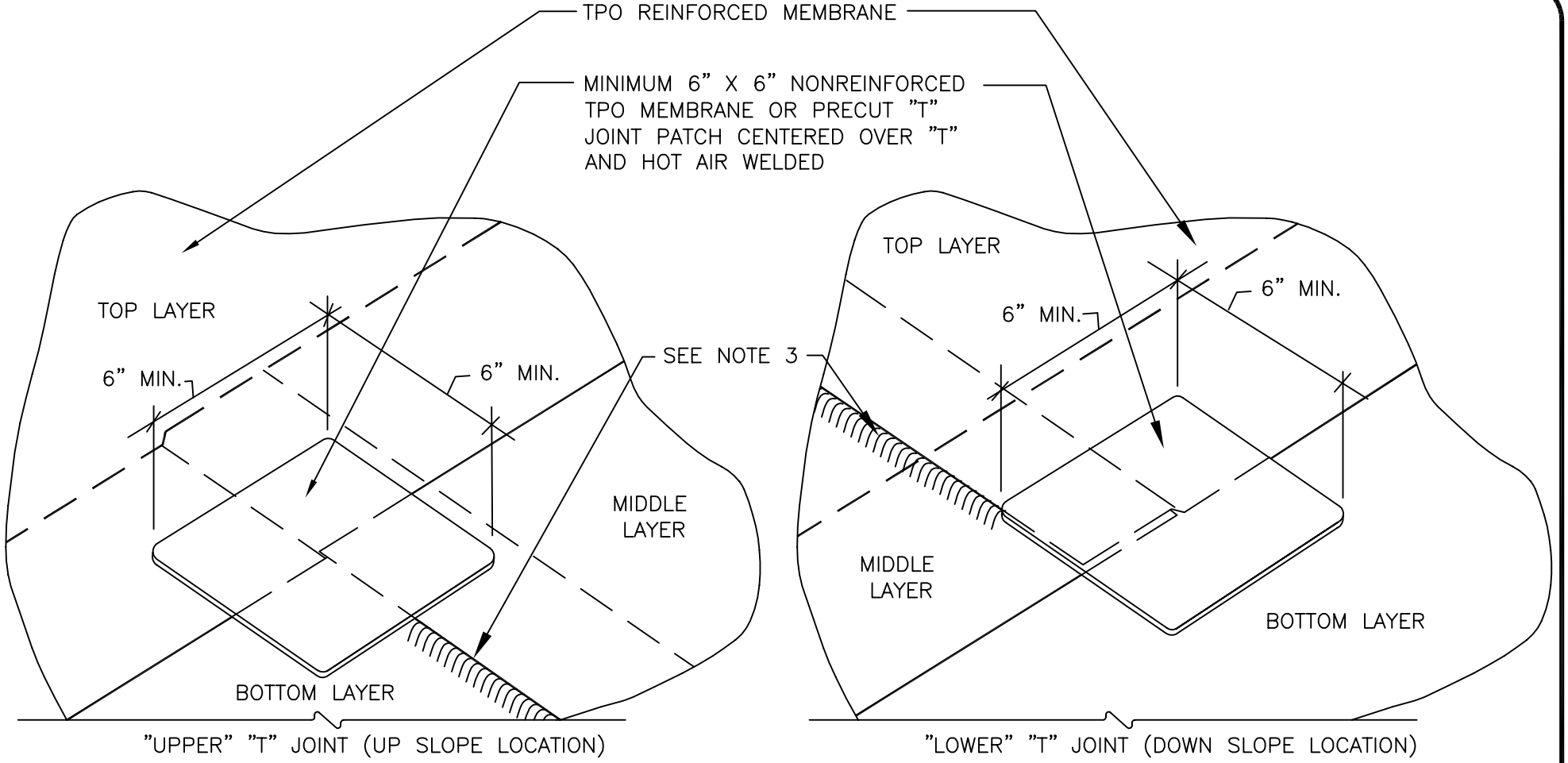

NOTES:

1. DETAIL TO BE USED IN CONJUCTION WITH STANDARD GUIDE SPECIFICATION CONTAINING REQUIREMENTS FOR NAILERS, INSULATION, ETC.
2. "T" PATCHES ARE REQUIRED ON ALL .060" AND .080" MEMBRANES AND ON ALL PROJECTS WITH WARRANTIES LONGER THAN 15 YEARS.
3. APPROXIMATELY ⅛" DIAMETER BEAD OF CUT EDGE SEALANT IS REQUIRED ON CUT EDGES OF TPO REINFORCED MEMBRANE.

MULE-HIDE PRODUCTS CO., INC.	**"T" JOINT COVER PATCH .060" (60 MIL) OR THICKER MEMBRANES**	**DETAIL NO.:**
	SYSTEMS:	**MHT-UN-105B**
	ALL TPO SYSTEMS	REVISION DATE: 10/2013

®

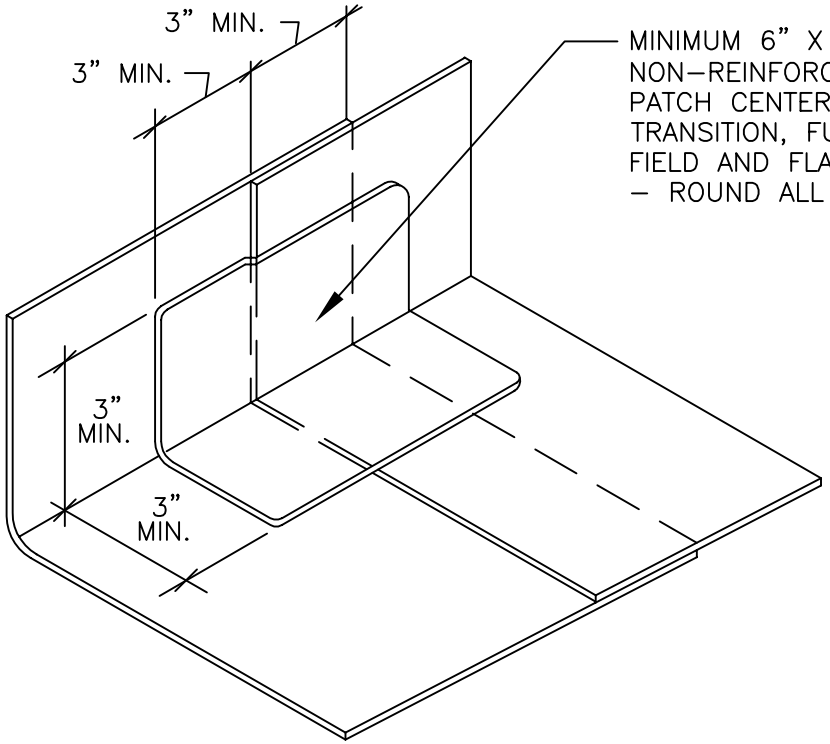

CONDITION 1 – WHEN RUSS IS USED

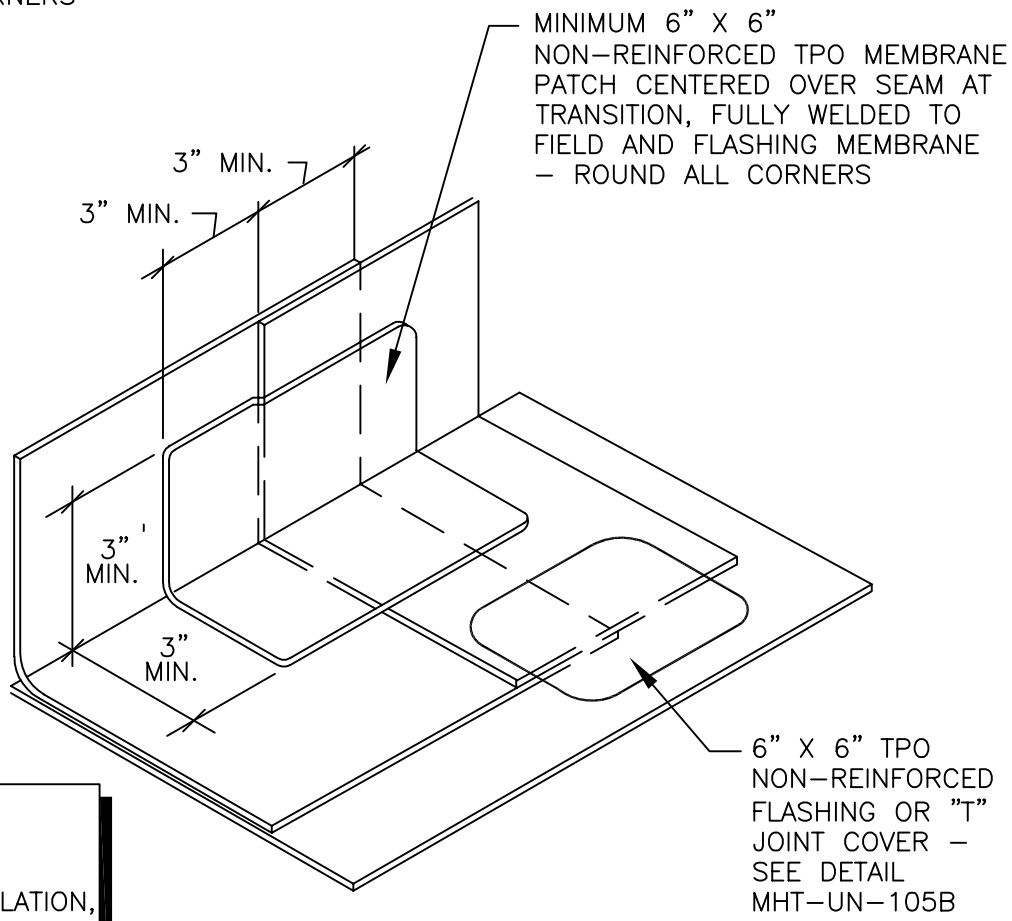

CONDITION 2 – WHEN RUSS IS NOT USED

NOTES:

1. DETAIL TO BE USED IN CONJUCTION WITH STANDARD GUIDE SPECIFICATION CONTAINING REQUIREMENTS FOR NAILERS, INSULATION, ETC.
2. FIELD / WALL TRANSITION PATCHES ARE REQUIRED ON ALL JOBS.

MULE-HIDE PRODUCTS CO., INC.	**SEAM PATCH AT FIELD / WALL TRANSITION**	**DETAIL NO.:**
	SYSTEMS:	**MHT-UN-105C**
	ALL TPO SYSTEMS	REVISION DATE: 10/2013

®

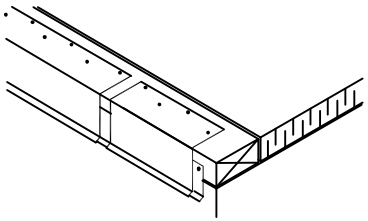

1. INSTALL TPO COATED METAL WITH $\frac{1}{8}$" – $\frac{1}{4}$" JOINTS BETWEEN ADJOINING SECTIONS.

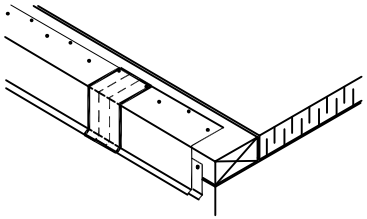

2. INSTALL 2" WIDE DUCT TAPE OVER JOINTS IN TPO COATED METAL.

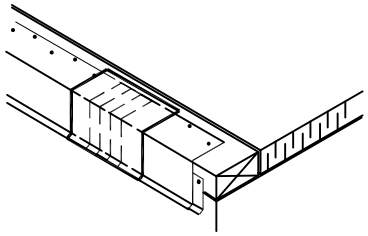

3. HEAT WELD 6" WIDE PIECE OF TPO NON–REINFORCED FLASHING OVER JOINT.

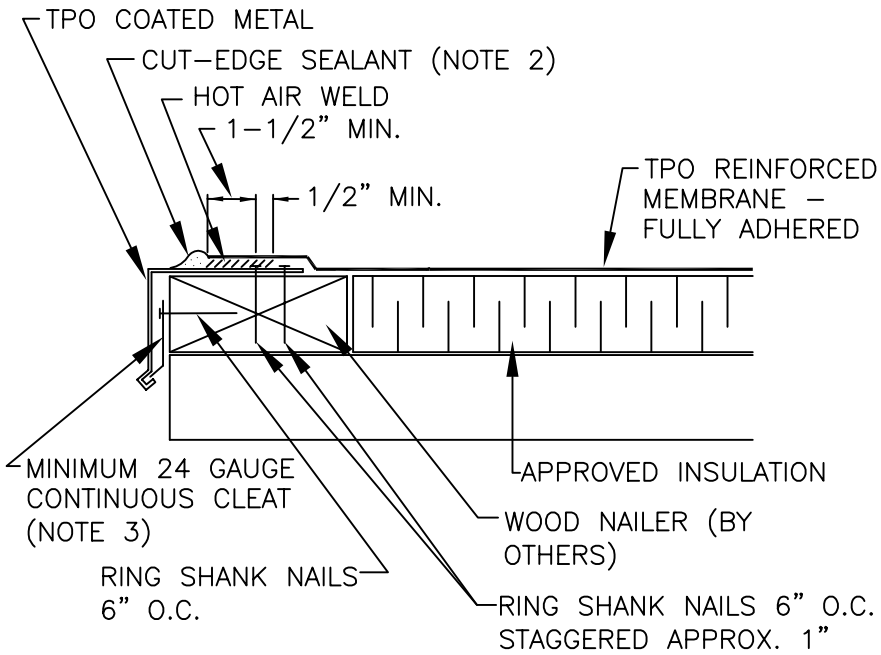

NOTES:

1. FASTENERS USED TO ATTACH TPO COATED METAL MUST PENETRATE WOOD NAILERS A MINIMUM OF 1–$\frac{1}{4}$". IF $\frac{1}{2}$" PLYWOOD IS USED AS THE TOP NAILER, FASTENERS MUST PENETRATE A MINIMUM OF 1–$\frac{1}{4}$" INTO NAILER BELOW.

2. APPROXIMATELY $\frac{1}{8}$" DIAMETER BEAD OF CUT–EDGE SEALANT IS REQUIRED ON CUT EDGES OF TPO REINFORCED MEMBRANE.

3. GAUGE OF CONTINUOUS CLEAT IS DEPENDENT ON THE FASCIA HEIGHT AS SHOWN IN THE CHART BELOW.

MAX. FASCIA HEIGHT	GAUGE OF CONT. CLEAT
4"	24 GAUGE
6"	22 GAUGE
8"	20 GAUGE

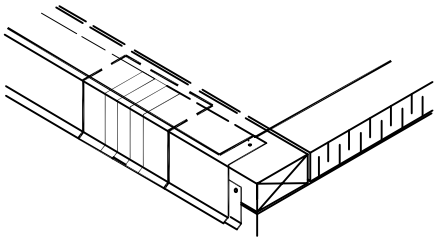

4. POSITION TPO REINFORCED MEMBRANE AND HEAT WELD TO TPO COATED METAL A MINIMUM OF 1–$\frac{1}{2}$" AS SHOWN TO LEFT.

NOTE:

THIS DETAIL IS ACCEPTABLE FOR USE IN A 20–YEAR WARRANTED SYSTEM

IF SHEETMETAL IS TO BE INCLUDED IN THE WARRANTY, CONTRACTOR MUST USE MULE–HIDE METAL PRODUCTS. REFER TO DETAILS MHT–3120, MHE–3120, MHT–3550, OR MHT–3555

MULE-HIDE PRODUCTS CO., INC.	**DRIP EDGE TPO COATED METAL** **SYSTEMS:** **FULLY ADHERED**	**DETAIL NO.:** **MHT-FA-106A** REVISION DATE: 10/2013

®

NOTES:

1. CLEAN THE EXISTING MEMBRANE (AND METAL IF APPLICABLE) WITH WEATHERED MEMBRANE CLEANER. PRIME THE MEMBRANE USING TAPE PRIMER. ONCE THE PRIMER IS PROPERLY DRIED, THE TPO PRESSURE–SENSITIVE COVER STRIP IS APPLIED AND ROLLED USING A 2" WIDE ROLLER.

2. WOOD NAILER MUST EXTEND PAST TOTAL WIDTH OF METAL FASCIA DECK FLANGE.

3. FASTENERS AND FASTENER PATTERN AS RECOMMENDED BY METAL EDGE MANUFACTURER.

4. DECK FLANGE MUST BE TOTALLY COVERED BY TPO PRESSURE–SENSITIVE COVER STRIP WITH MINIMUM 2" COVERAGE PAST NAIL HEADS.

5. APPLY MULE–HIDE UNIVERSAL SINGLE PLY SEALANT ALONG BOTH EDGES OF TPO COVER TAPE AND ACROSS ENDLAPS.

HEAT COVER STRIP AT SPLICE INTERSECTIONS PRIOR TO ROLLING TO CONFORM TO STEP–OFFS

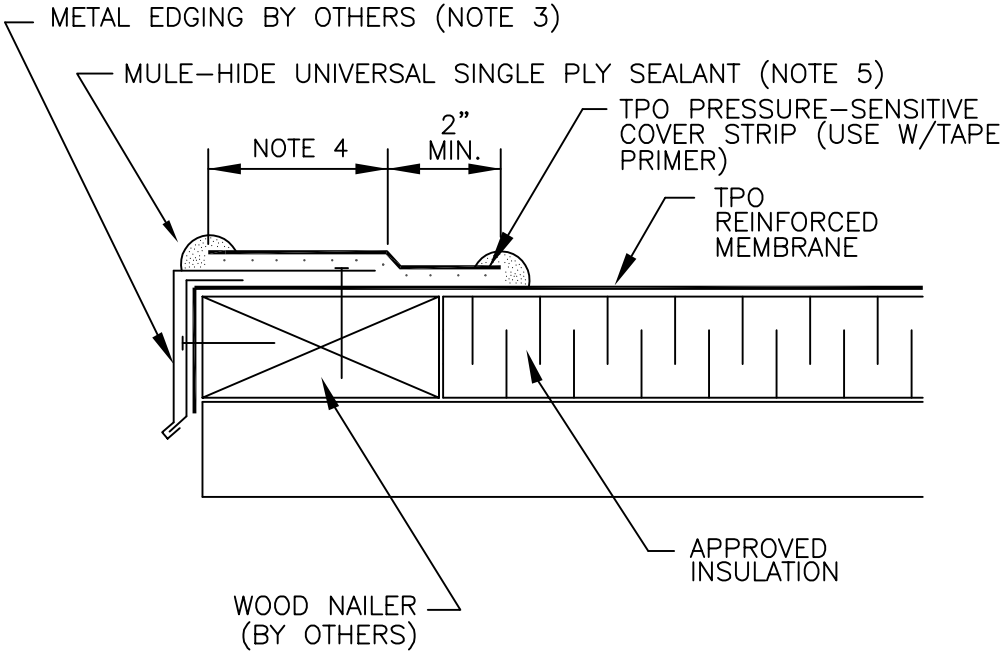

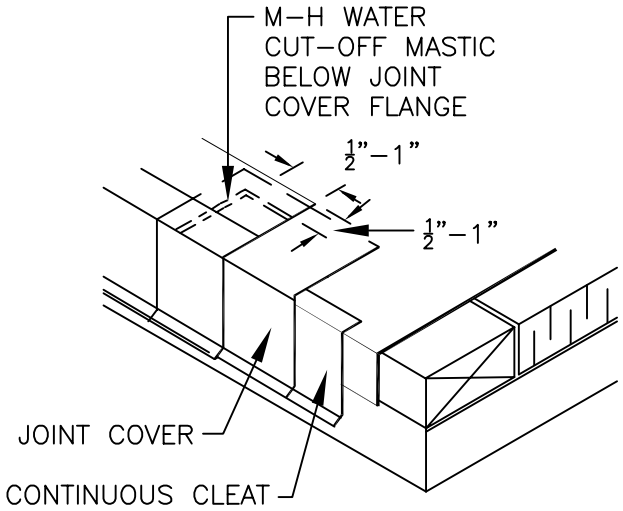

NOTE:

THIS DETAIL IS ACCEPTABLE FOR USE IN A 20–YEAR WARRANTED SYSTEM

IF SHEETMETAL IS TO BE INCLUDED IN THE WARRANTY, CONTRACTOR MUST USE MULE–HIDE METAL PRODUCTS. REFER TO DETAILS MHT–3120, MHE–3120, MHT–3550, OR MHT–3555

MULE-HIDE PRODUCTS CO., INC.	**DRIP EDGE** **TPO P/S COVER STRIP** **SYSTEMS:** **ALL TPO SYSTEMS**	**DETAIL NO.:** **MHT-UN-106B** REVISION DATE: 10/2013

®

NOTES:

1. WHERE MULTI–LEVEL ROOFS MEET AT A COMMON WALL AND THE DIFFERENCE IN HEIGHT IS LESS THAN 3 FT, THE ROOF STRIP OF THE UPPER ROOF AND THE ROOF STRIP OF THE LOWER ROOF ARE EACH TREATED AS FIELD AREAS, EXCEPT FOR THE SQUARE AREAS AT EACH END, WHICH ARE TREATED AS PERIMETER AREAS.

2. FOR FACTORY MUTUAL PROJECTS, THE WIDTH OF THE ROOF PERIMETER AND CORNER AREAS IS DEFINED AS THE SMALLER OF 0.1 TIMES THE BUILDING LESSER PLAN DIMENSION OR 0.4 TIMES THE EAVE HEIGHT (MEAN ROOF HEIGHT FOR SLOPES GREATER THAN 2"/12" SLOPE), EXCEPT FOR HEIGHTS GREATER THAN 60 FT.

3. ROOF PERIMETER

   MECHANICALLY ATTACHED SYSTEMS
   DISTANCE BETWEEN ROWS IS LESS THAN OR EQUAL TO 60% OF THE APPROVED ROOF FIELD SPACING OF THE FASTENER ROWS.

   FULLY ADHERED SYSTEMS
   ALL ROOF PERIMETER DIMENSIONS ARE TO BE A MINIMUM OF EIGHT (8) FEET AND INSULATION FASTENERS ARE INCREASED 50%.

4. ROOF CORNERS

   MECHANICALLY ATTACHED SYSTEMS
   DISTANCE BETWEEN ROWS IS LESS THAN OR EQUAL TO 40% OF THE APPROVED ROOF FIELD SPACING OF THE FASTENER ROWS.

   FULLY ADHERED SYSTEMS
   ALL ROOF CORNER DIMENSIONS ARE TO BE A MINIMUM OF EIGHT (8) FEET BY EIGHT (8) FEET AND INSULATION FASTENERS ARE INCREASED 100%.

5. INCREASED FASTENING IN THE PERIMETERS AND CORNERS IS REQUIRED ON ALL WARRANTED JOBS, BOTH MECHANICALLY ATTACHED AND FULLY ADHERED.

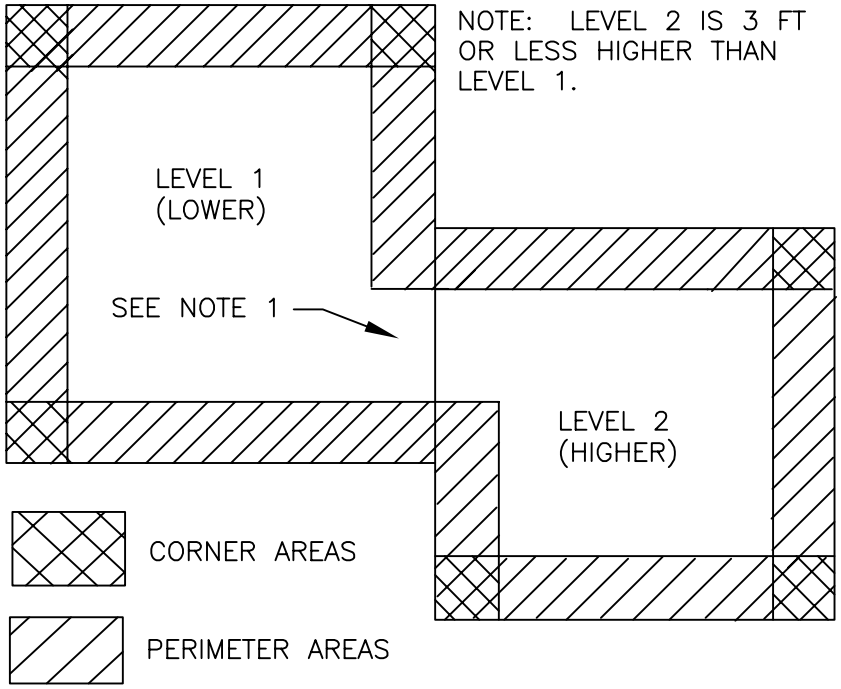

MULE-HIDE PRODUCTS CO., INC.	**ROOF PERIMETER / CORNER CALCULATION ELEVATION DIFFERENCE 3' OR LESS** **SYSTEMS:** **ALL TPO SYSTEMS**	**DETAIL NO.:** **MHT-UN-108A** REVISION DATE: 10/2013

®

NOTES:

1. WHERE MULTI–LEVEL ROOFS MEET AT A COMMON WALL AND THE DIFFERENCE IN HEIGHT IS LESS THAN 3 FT, THE ROOF STRIP OF THE UPPER ROOF AND THE ROOF STRIP OF THE LOWER ROOF ARE EACH TREATED AS FIELD AREAS, EXCEPT FOR THE SQUARE AREAS AT EACH END, WHICH ARE TREATED AS PERIMETER AREAS.

2. FOR FACTORY MUTUAL PROJECTS, THE WIDTH OF THE ROOF PERIMETER AND CORNER AREAS IS DEFINED AS THE SMALLER OF 0.1 TIMES THE BUILDING LESSER PLAN DIMENSION OR 0.4 TIMES THE EAVE HEIGHT (MEAN ROOF HEIGHT FOR SLOPES GREATER THAN 2"/12" SLOPE), EXCEPT FOR HEIGHTS GREATER THAN 60 FT.

3. ROOF PERIMETER

   MECHANICALLY ATTACHED SYSTEMS
   DISTANCE BETWEEN ROWS IS LESS THAN OR EQUAL TO 60% OF THE APPROVED ROOF FIELD SPACING OF THE FASTENER ROWS.

   FULLY ADHERED SYSTEMS
   ALL ROOF PERIMETER DIMENSIONS ARE TO BE A MINIMUM OF EIGHT (8) FEET AND INSULATION FASTENERS ARE INCREASED 50%.

4. ROOF CORNERS

   MECHANICALLY ATTACHED SYSTEMS
   DISTANCE BETWEEN ROWS IS LESS THAN OR EQUAL TO 40% OF THE APPROVED ROOF FIELD SPACING OF THE FASTENER ROWS.

   FULLY ADHERED SYSTEMS
   ALL ROOF CORNER DIMENSIONS ARE TO BE A MINIMUM OF EIGHT (8) FEET BY EIGHT (8) FEET AND INSULATION FASTENERS ARE INCREASED 100%.

5. INCREASED FASTENING IN THE PERIMETERS AND CORNERS IS REQUIRED ON ALL WARRANTED JOBS, BOTH MECHANICALLY ATTACHED AND FULLY ADHERED.

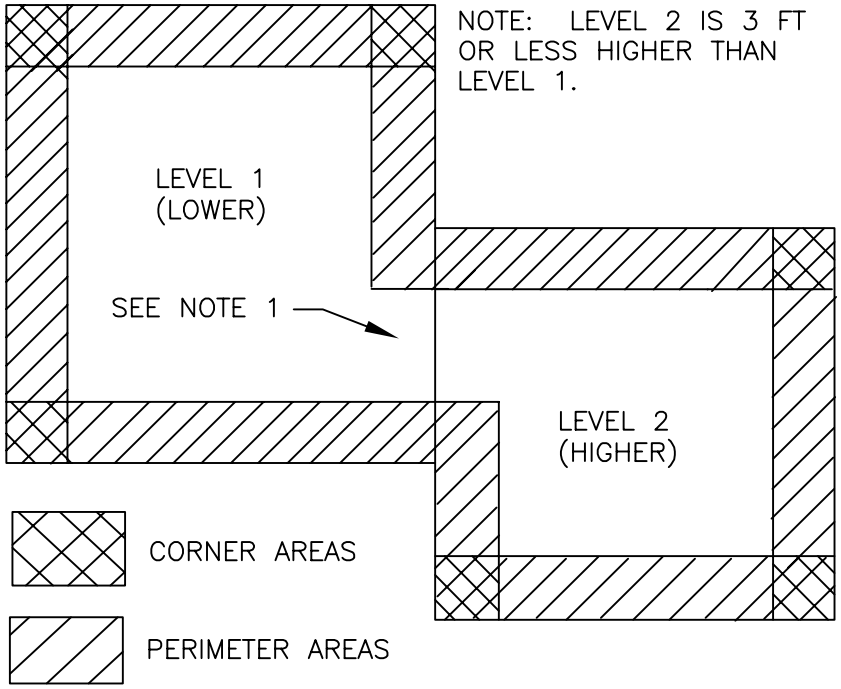

MULE-HIDE PRODUCTS CO., INC.	**ROOF PERIMETER / CORNER CALCULATION ELEVATION DIFFERENCE 3' OR LESS** **SYSTEMS:** **ALL TPO SYSTEMS**	**DETAIL NO.:** **MHT-UN-108A** REVISION DATE: 10/2013

®

NOTES:

1. WHERE MULTI–LEVEL ROOFS MEET AT A COMMON WALL AND THE DIFFERENCE IN HEIGHT IS GREATER THAN 3 FT, THE EDGE OF THE UPPER ROOF IS TREATED AS ROOF PERIMETER AND CORNERS. THE LOWER ROOF STRIP WHERE IT MEETS A HIGHER WALL IS TREATED AS FIELD AREA, EXCEPT FOR THE SQUARE AREAS AT EACH END WHICH ARE TREATED AS PERIMETER AREAS.

2. FOR FACTORY MUTUAL PROJECTS, THE WIDTH OF THE ROOF PERIMETER AND CORNER AREAS IS DEFINED AS THE SMALLER OF 0.1 TIMES THE BUILDING LESSER PLAN DIMENSION OR 0.4 TIMES THE EAVE HEIGHT (MEAN ROOF HEIGHT FOR SLOPES GREATER THAN 2"/12" SLOPE), EXCEPT FOR HEIGHTS GREATER THAN 60 FT.

3. ROOF PERIMETER

   MECHANICALLY ATTACHED SYSTEMS
   DISTANCE BETWEEN ROWS IS LESS THAN OR EQUAL TO 60% OF THE APPROVED ROOF FIELD SPACING OF THE FASTENER ROWS.

   FULLY ADHERED SYSTEMS
   ALL ROOF PERIMETER DIMENSIONS ARE TO BE A MINIMUM OF EIGHT (8) FEET AND INSULATION FASTENERS ARE INCREASED 50%.

4. ROOF CORNERS

   MECHANICALLY ATTACHED SYSTEMS
   DISTANCE BETWEEN ROWS IS LESS THAN OR EQUAL TO 40% OF THE APPROVED ROOF FIELD SPACING OF THE FASTENER ROWS.

   FULLY ADHERED SYSTEMS
   ALL ROOF CORNER DIMENSIONS ARE TO BE A MINIMUM OF EIGHT (8) FEET BY EIGHT (8) FEET AND INSULATION FASTENERS ARE INCREASED 100%.

5. INCREASED FASTENING IN THE PERIMETERS AND CORNERS IS REQUIRED ON ALL WARRANTED JOBS, BOTH MECHANICALLY ATTACHED AND FULLY ADHERED.

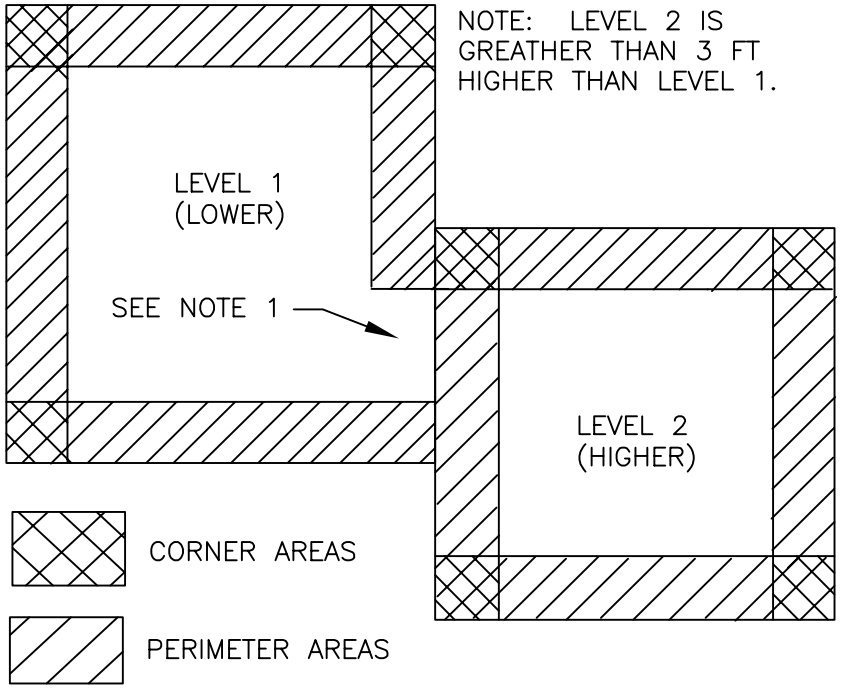

MULE-HIDE PRODUCTS CO., INC.	**ROOF PERIMETER / CORNER CALCULATION ELEVATION DIFFERENCE GREATER THAN 3'** **SYSTEMS:** **ALL TPO SYSTEMS**	**DETAIL NO.:** **MHT-UN-108B** REVISION DATE: 10/2013

®

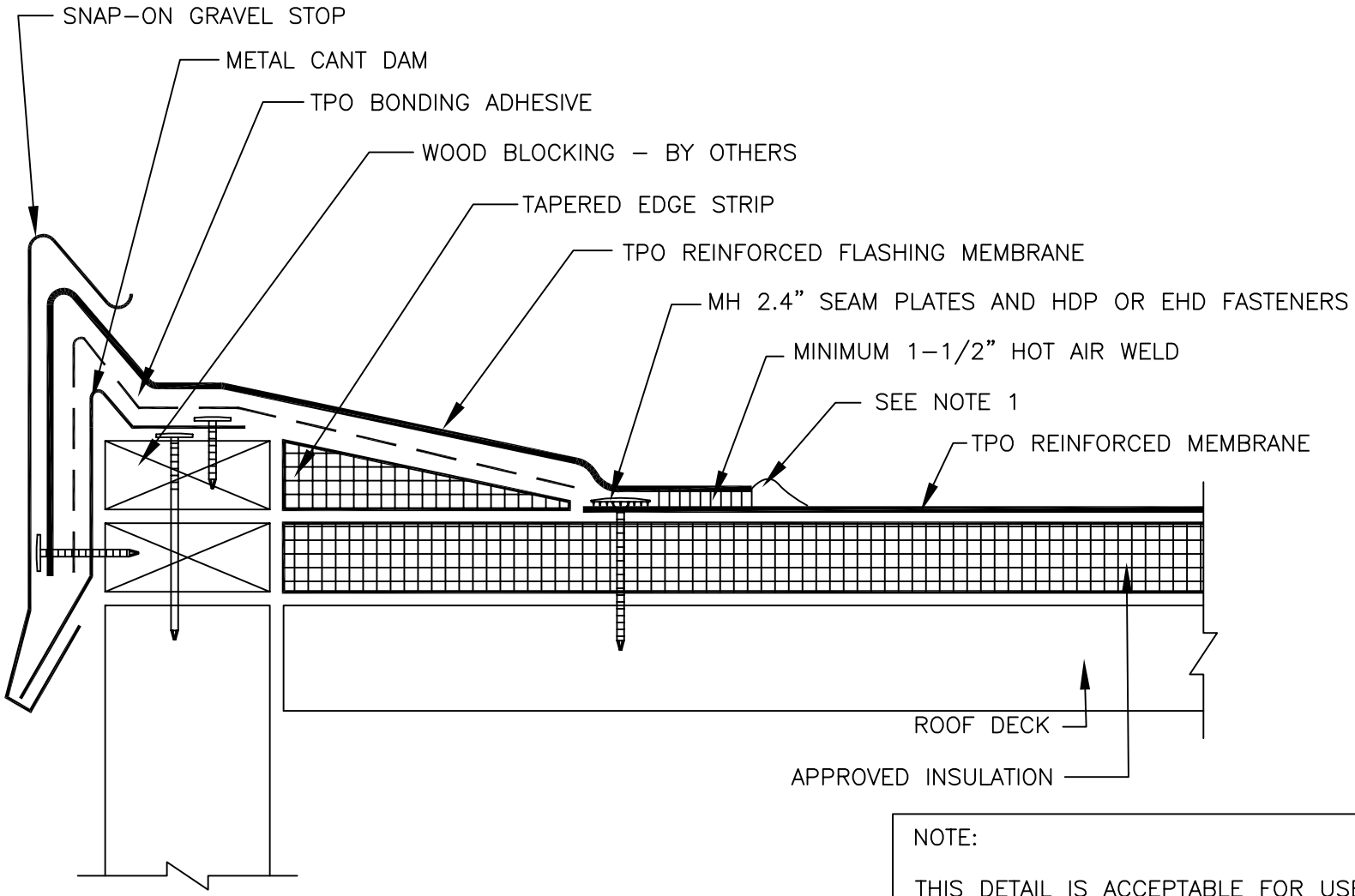

NOTE:

THIS DETAIL IS ACCEPTABLE FOR USE IN A 20–YEAR WARRANTED SYSTEM

IF SHEETMETAL IS TO BE INCLUDED IN THE WARRANTY, CONTRACTOR MUST USE MULE–HIDE METAL PRODUCTS. REFER TO DETAILS MHT–3110A OR MHT–3115A

NOTES:

1. APPROXIMATELY $\frac{1}{8}$" DIAMETER BEAD OF CUT–EDGE SEALANT IS REQUIRED ON CUT EDGES OF TPO REINFORCED MEMBRANE.

MULE-HIDE PRODUCTS CO., INC.	**TAPERED EDGE / GRAVEL STOP**	**DETAIL NO.:**
	SYSTEMS:	**MHT-UN-201**
	ALL TPO SYSTEMS	REVISION DATE: 10/2013

®

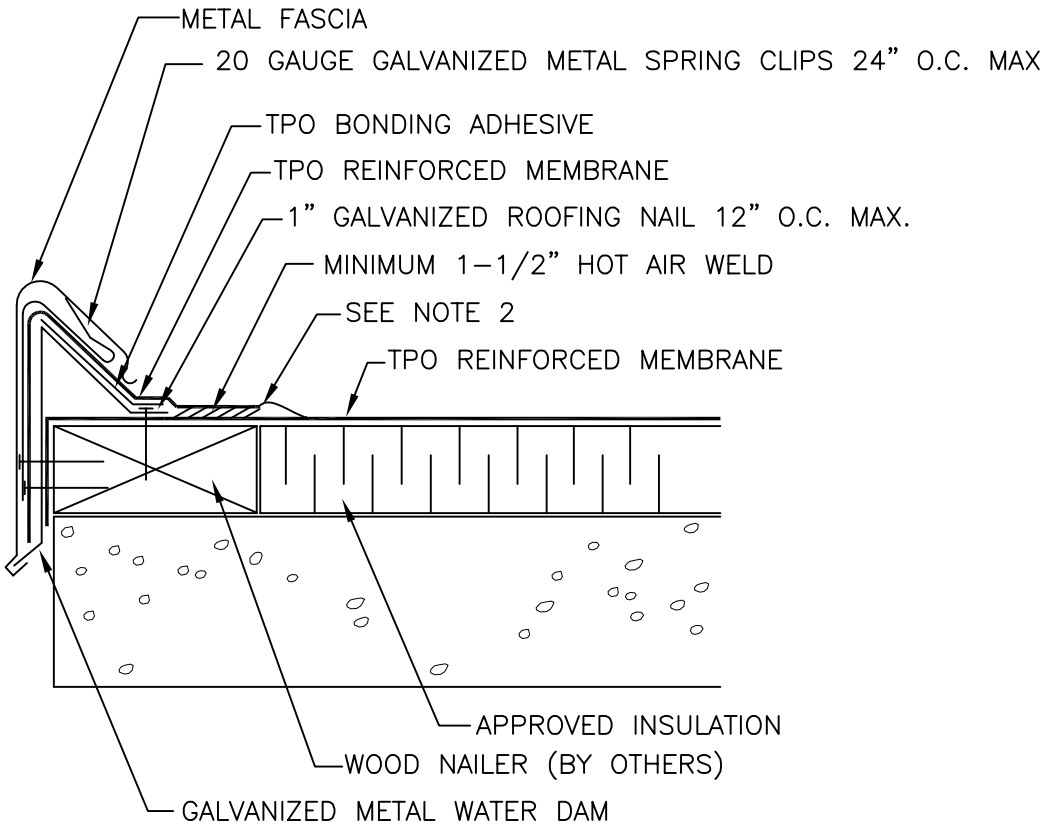

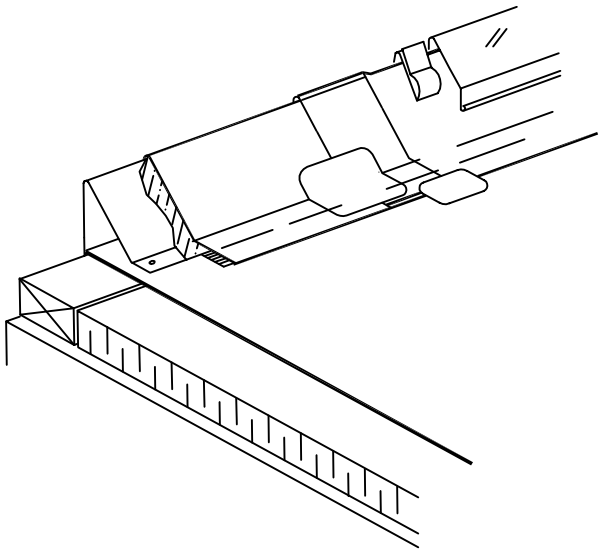

NOTE:

THIS DETAIL IS ACCEPTABLE FOR USE IN A 20-YEAR WARRANTED SYSTEM

IF SHEETMETAL IS TO BE INCLUDED IN THE WARRANTY, CONTRACTOR MUST USE MULE-HIDE METAL PRODUCTS. REFER TO DETAILS MHT-3110A OR MHT-3115A

NOTES:

1. WOOD NAILER MUST EXTEND PAST TOTAL WIDTH OF DECK FLANGE.
2. APPROXIMATELY 1/8" DIAMETER BEAD OF CUT-EDGE SEALANT IS REQUIRED ON CUT EDGES OF TPO REINFORCED MEMBRANE.

MULE-HIDE PRODUCTS CO., INC.	**SNAP-ON FASCIA WITH SPRING CLIPS**	**DETAIL NO.:**
	SYSTEMS:	**MHT-UN-202A**
	ALL TPO SYSTEMS	REVISION DATE: 10/2013

®

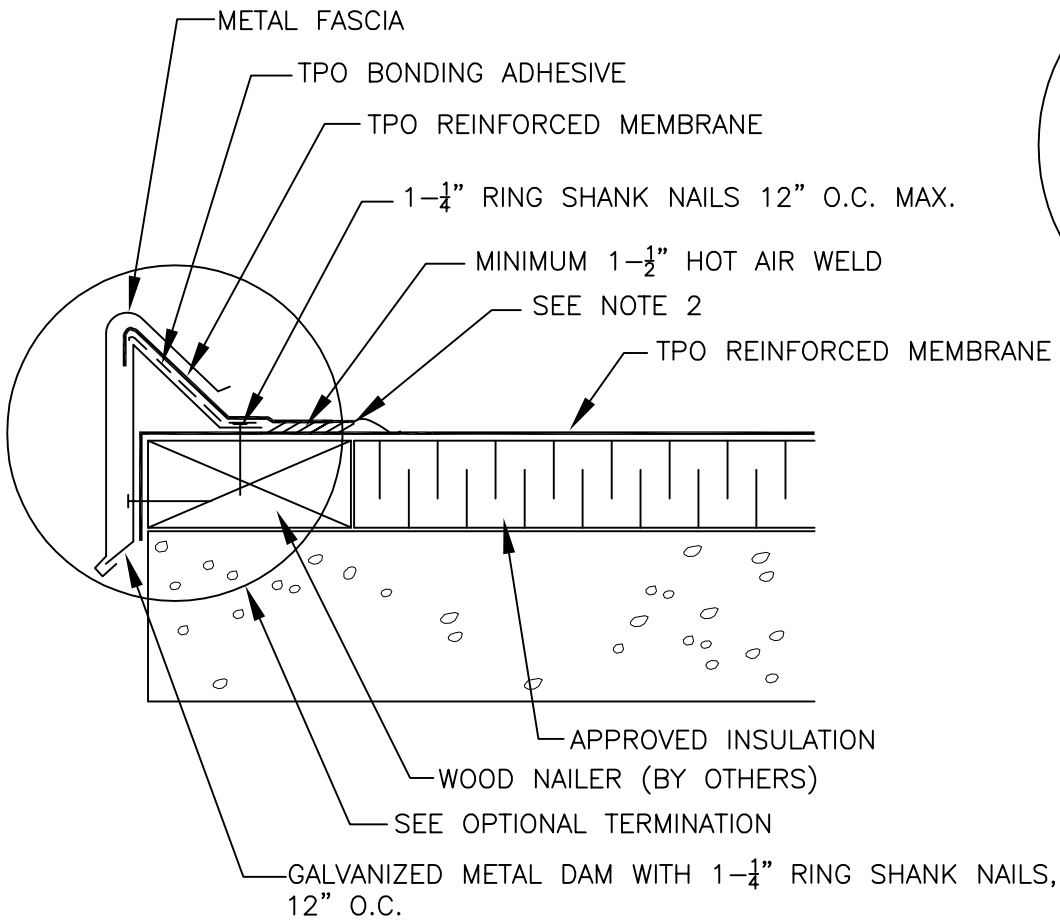

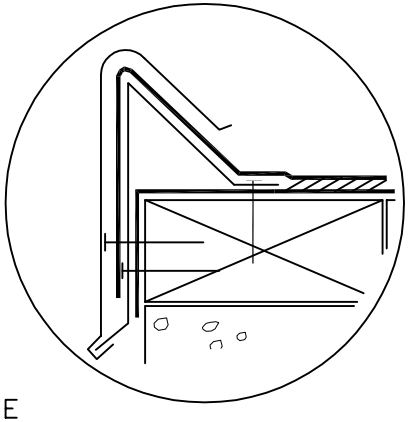

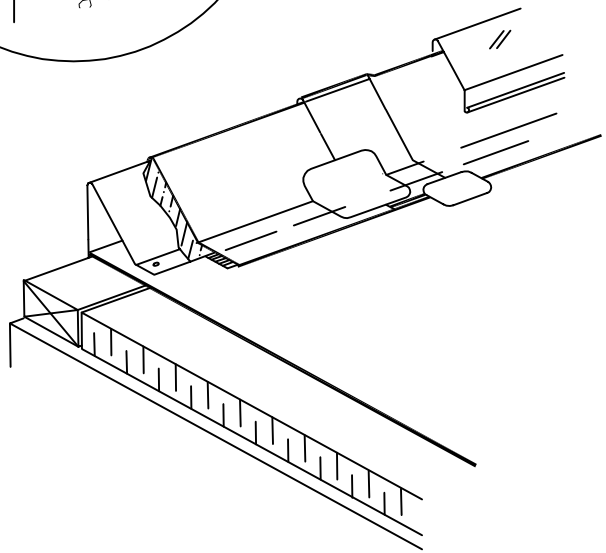

NOTES:

1. WOOD NAILER MUST EXTEND PAST TOTAL WIDTH OF DECK FLANGE.
2. APPROXIMATELY 1/8" DIAMETER BEAD OF CUT–EDGE SEALANT IS REQUIRED ON CUT EDGES OF TPO REINFORCED MEMBRANE.

NOTE:

THIS DETAIL IS ACCEPTABLE FOR USE IN A 20–YEAR WARRANTED SYSTEM

IF SHEETMETAL IS TO BE INCLUDED IN THE WARRANTY, CONTRACTOR MUST USE MULE–HIDE METAL PRODUCTS. REFER TO DETAILS MHT–3110A OR MHT–3115A

MULE-HIDE PRODUCTS CO., INC.	**SNAP-ON FASCIA**	**DETAIL NO.:**
	SYSTEMS:	**MHT-UN-202B**
	ALL TPO SYSTEMS	REVISION DATE: 10/2013

®

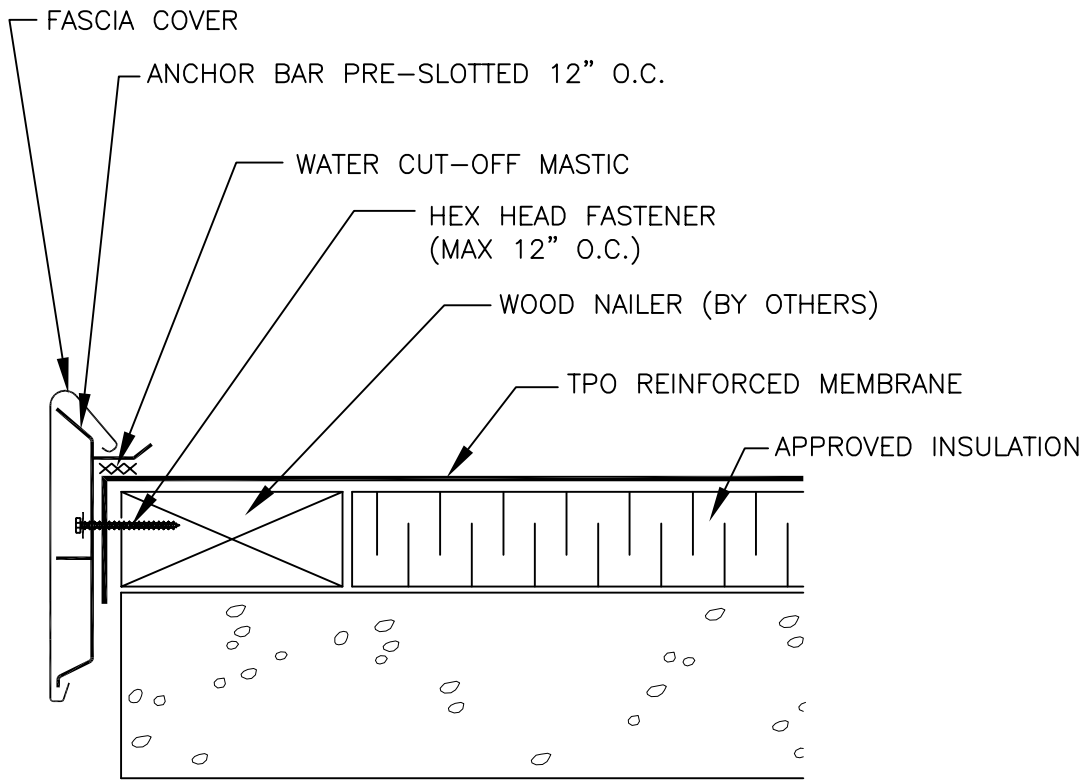

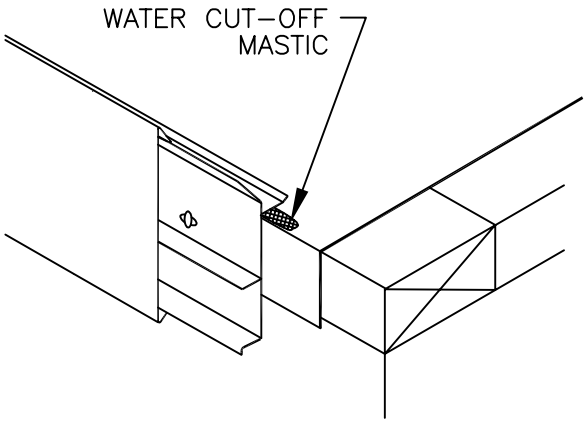

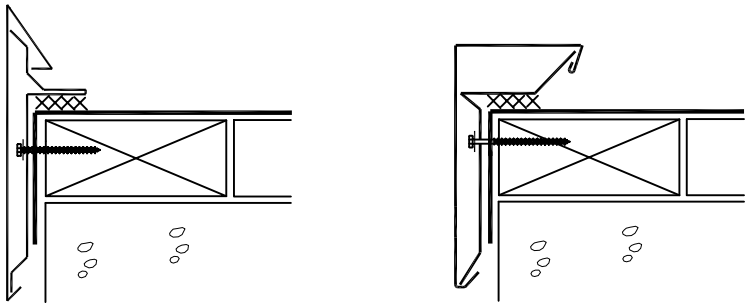

ANCHOR BAR OPTIONS

NOTES:

1. IF INCIDENTAL/PERIODIC PONDED WATER IS EXPECTED, THE FASCIA SYSTEM MUST BE ELEVATED AND SCUPPERS PROVIDED FOR DRAINAGE.

2. CONTACT METAL-ERA (800-558-2162) FOR INSTALLATION INSTRUCTION MANUAL FOR STEP-BY-STEP PROCEDURES AND FOR THE VARIOUS PRODUCT FEATURES AVAILABLE.

3. ANCHOR-TITE FASCIA SYSTEM IS A PATENTED EDGE SYSTEM MANUFACTURED BY METAL-ERA INC.

4. ANCHOR-TITE FASCIA SYSTEM IS ELIGIBLE FOR A SHEET METAL WARRANTY FROM MULE-HIDE.

NOTE:

THIS DETAIL IS ACCEPTABLE FOR USE IN A 20-YEAR WARRANTED SYSTEM

MULE-HIDE PRODUCTS CO., INC.	**ANCHOR-TITE FASCIA SYSTEM BY METAL-ERA, INC.** **SYSTEMS:** **ALL TPO SYSTEMS**	**DETAIL NO.:** **MHT-UN-204** REVISION DATE: 10/2013

®

NOTE:

IF SHEETMETAL IS TO BE INCLUDED IN THE WARRANTY, CONTRACTOR MUST USE MULE-HIDE METAL PRODUCTS. REFER TO DETAILS MHSM-3500, MHSM-3510, OR MHSM-3511.

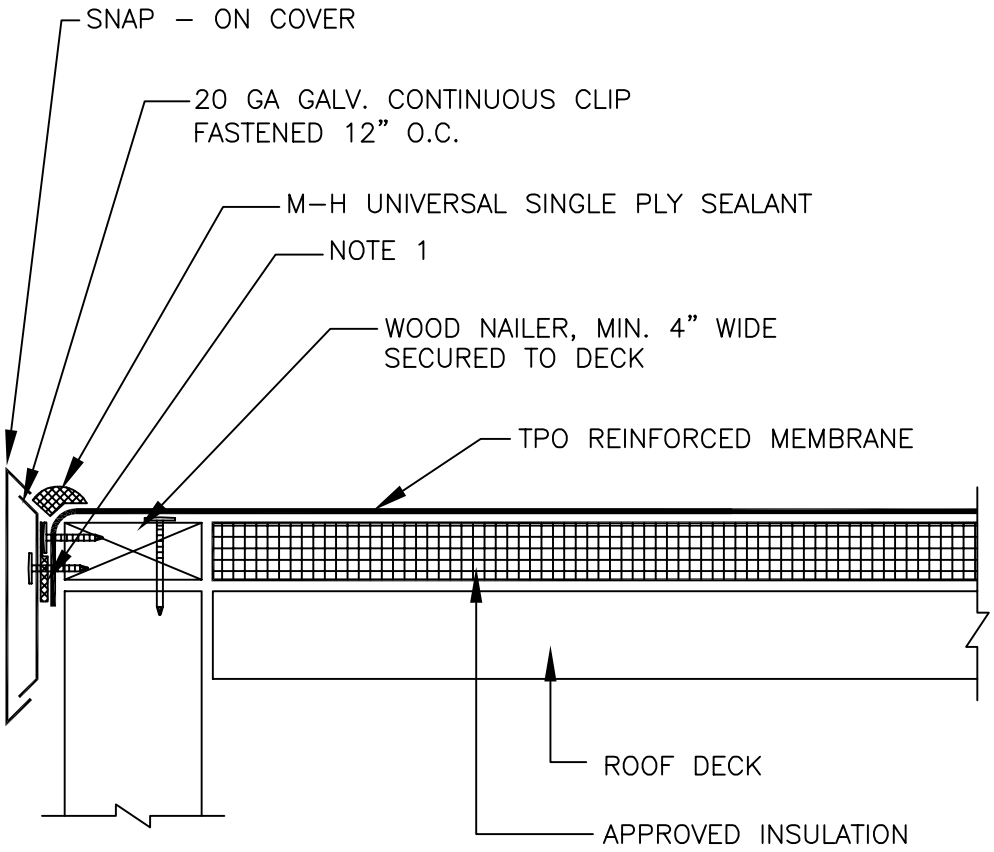

NOTES:

1. INSTALL A BEAD OF APPROVED SEALANT BETWEEN THE CLIP AND THE TPO REINFORCED MEMBRANE.

2. SNAP ON COVER SHALL BE A MINIMUM THICKNESS OF:
   STEEL – 24 GAUGE
   ALUMINUM – .032 INCHES

NOTE:

THIS DETAIL IS ACCEPTABLE FOR USE IN A 20-YEAR WARRANTED SYSTEM

MULE-HIDE PRODUCTS CO., INC.	**FASCIA / DRIP EDGE SYSTEM**	**DETAIL NO.:**
	SYSTEMS:	**MHT-UN-205**
	ALL TPO SYSTEMS	REVISION DATE: 10/2013

®

NOTE:

IF SHEETMETAL IS TO BE INCLUDED IN THE WARRANTY, CONTRACTOR MUST USE MULE-HIDE METAL PRODUCTS. REFER TO DETAIL MHSM-2091.

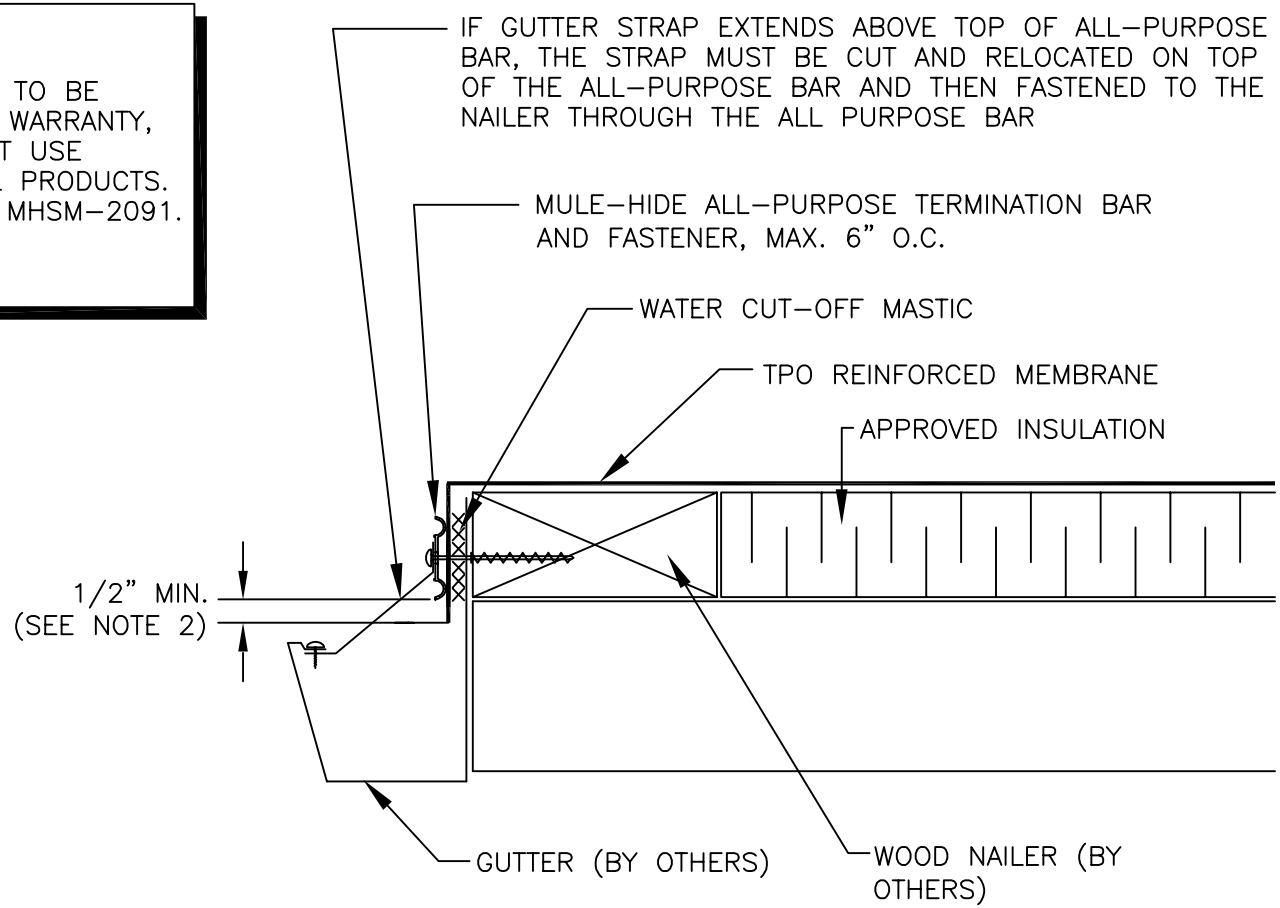

NOTES:

1. FASTENING OF ALL-PURPOSE BAR MUST PROVIDE CONSTANT COMPRESSION ON WATER CUT-OFF MASTIC.
2. ALL PURPOSE BAR IS INSTALLED WITH "BUMPS" DOWN, FACING THE MEMBRANE.
3. ALLOW MEMBRANE SHEET TO EXTEND 1/2" MINIMUM BELOW ALL-PURPOSE BAR TO ENSURE FASTENER PENETRATION THROUGH SCRIM REINFORCEMENT.

NOTE:

THIS DETAIL IS ACCEPTABLE FOR USE IN A 20-YEAR WARRANTED SYSTEM

MULE-HIDE PRODUCTS CO., INC.	**ALL - PURPOSE BAR EDGE TERMINATION** **SYSTEMS:** **ALL TPO SYSTEMS**	**DETAIL NO.:** **MHT-UN-206** REVISION DATE: 10/2013

®

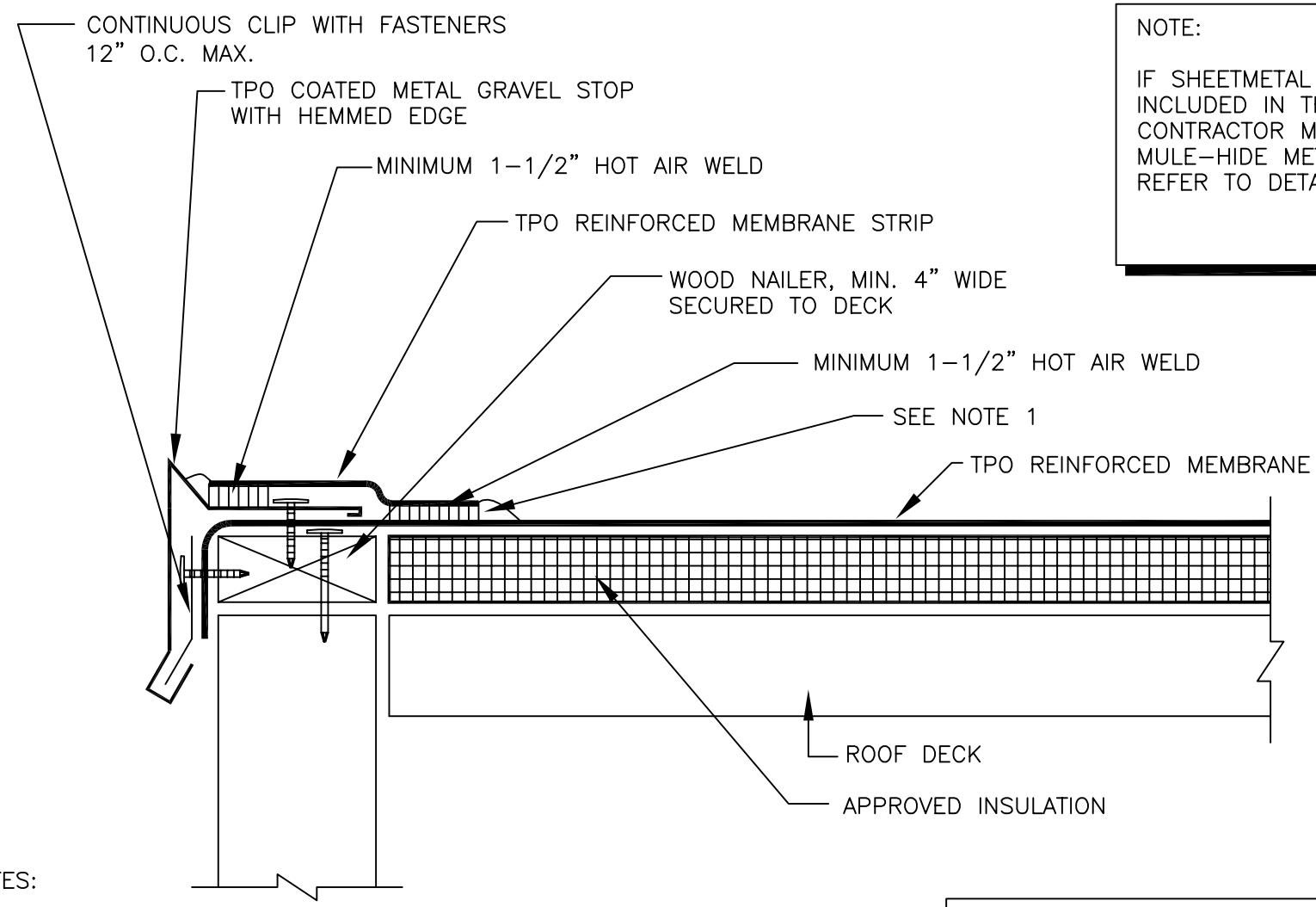

NOTE:

IF SHEETMETAL IS TO BE INCLUDED IN THE WARRANTY, CONTRACTOR MUST USE MULE-HIDE METAL PRODUCTS. REFER TO DETAIL MHT-3130.

NOTES:

1. APPROXIMATELY ⅛" DIAMETER BEAD OF CUT-EDGE SEALANT IS REQUIRED ON CUT EDGES OF TPO REINFORCED MEMBRANE.

2. SEE DETAIL MHT-UN-213 FOR INSTRUCTIONS TO SEAL JOINTS IN GRAVEL STOP.

NOTE:

THIS DETAIL IS ACCEPTABLE FOR USE IN A 20-YEAR WARRANTED SYSTEM

MULE-HIDE PRODUCTS CO., INC.	**GRAVEL STOP TPO COATED METAL**	**DETAIL NO.:**
	SYSTEMS:	**MHT-UN-211**
	ALL TPO SYSTEMS	REVISION DATE: 10/2013

®

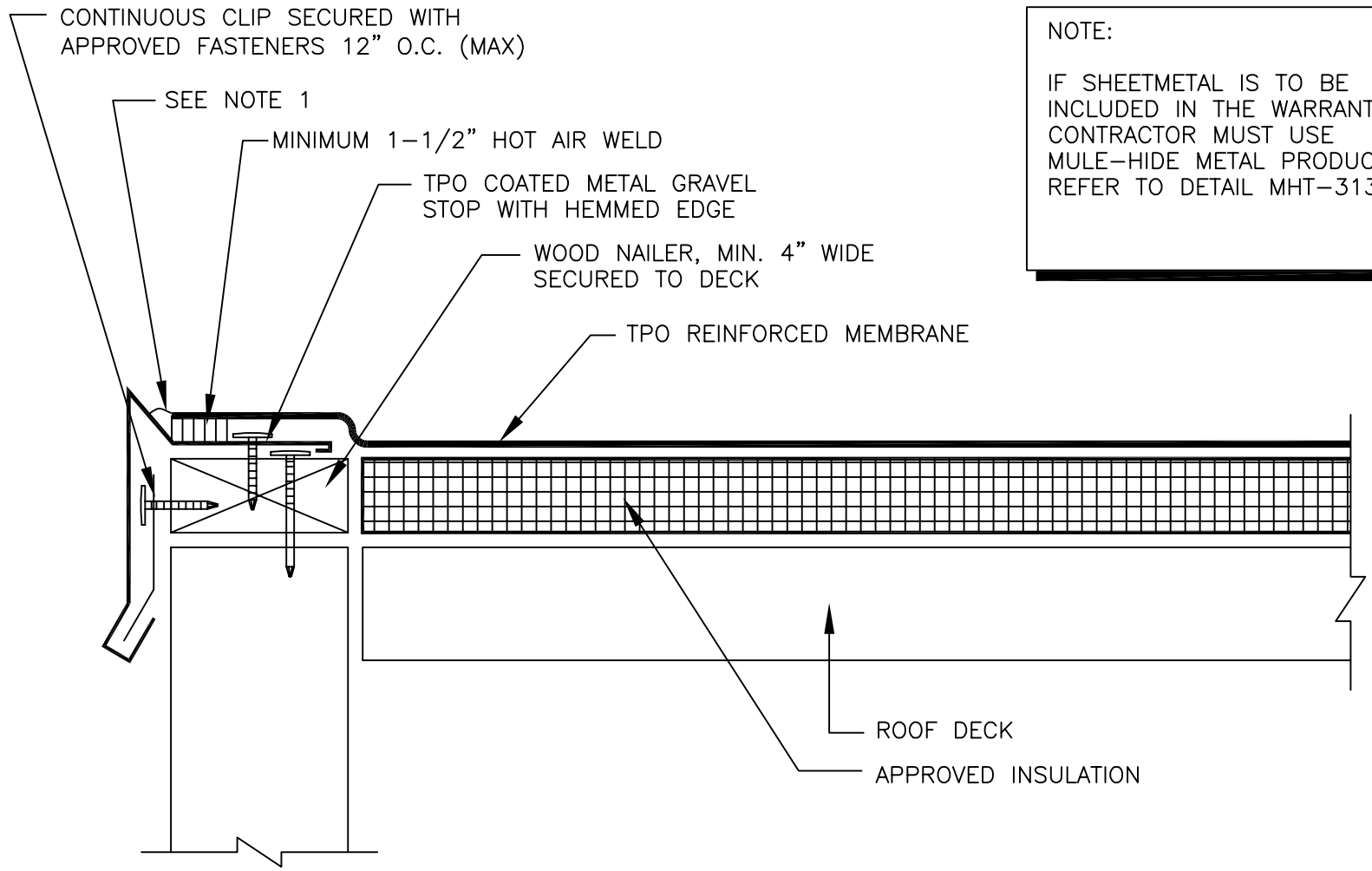

NOTE:

IF SHEETMETAL IS TO BE INCLUDED IN THE WARRANTY, CONTRACTOR MUST USE MULE-HIDE METAL PRODUCTS. REFER TO DETAIL MHT-3130.

NOTE:

THIS DETAIL IS NOT ACCEPTABLE FOR USE IN A 20-YEAR WARRANTED SYSTEM OR FOR EXTENDED WIND SPEED COVERAGE

NOTES:

1. APPROXIMATELY 1/8" DIAMETER BEAD OF CUT-EDGE SEALANT IS REQUIRED ON CUT EDGES OF TPO REINFORCED MEMBRANE.

MULE-HIDE PRODUCTS CO., INC.	**GRAVEL STOP TPO COATED METAL**	**DETAIL NO.:**
	SYSTEMS:	**MHT-UN-212**
	ALL TPO SYSTEMS	REVISION DATE: 10/2013

®

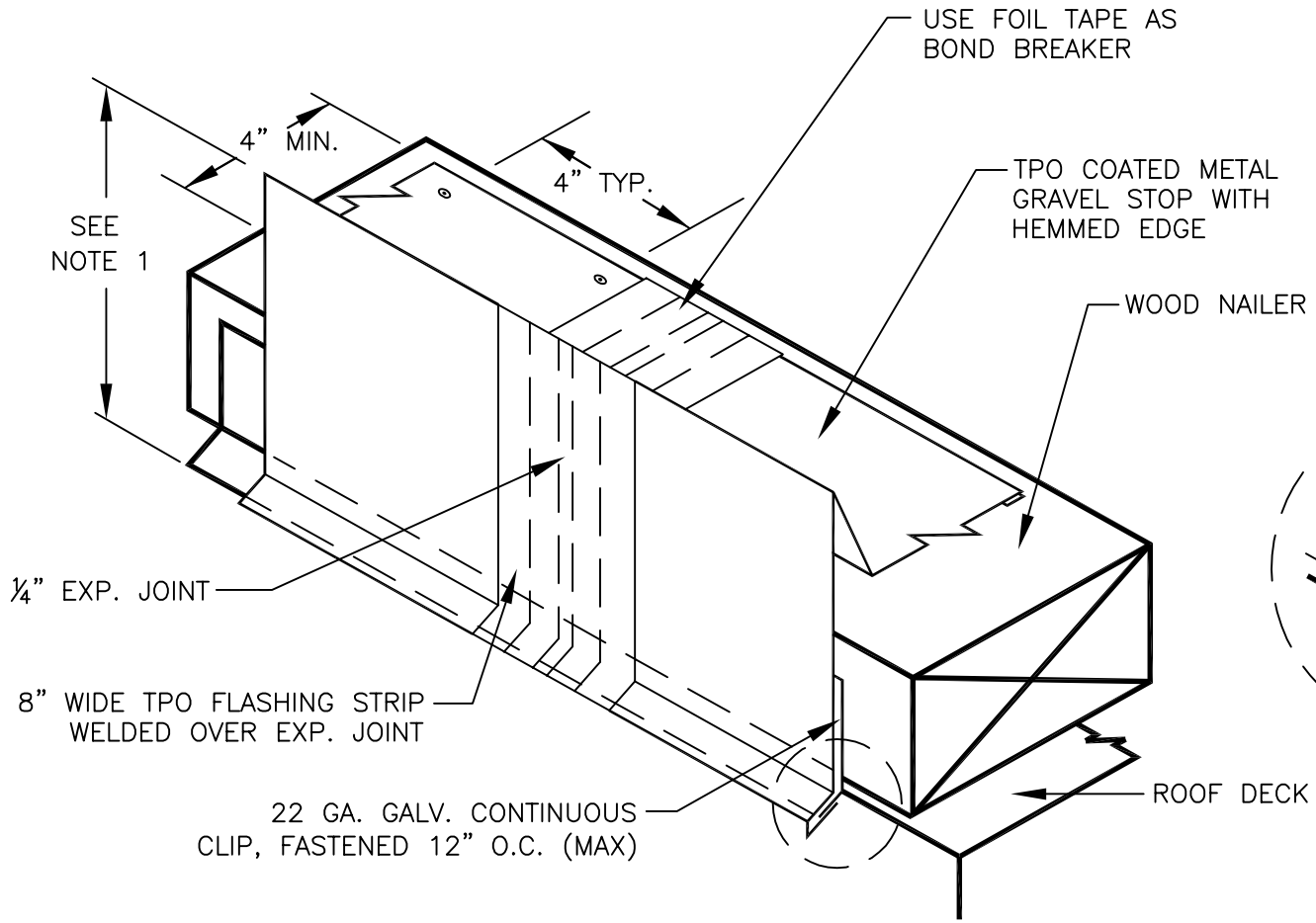

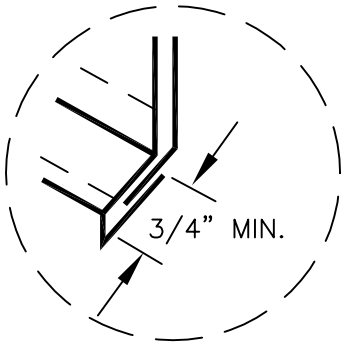

NOTE:

IF SHEETMETAL IS TO BE INCLUDED IN THE WARRANTY, CONTRACTOR MUST USE MULE-HIDE METAL PRODUCTS. REFER TO DETAIL MHT-3130.

NOTES:

1. MAXIMUM FACE DIMENSION SHOULD BE 5" TO PREVENT DISTORTION FROM "OIL CANNING". IF SURFACE DISTORTION IS ACCEPTABLE, FACE DIMENSION MAY BE INCREASED TO 8".

2. FOR FASCIAS GREATER THAN 8", INSTALL IN TWO SECTIONS.

NOTE:

USING THIS DETAIL IN CONJUNCTION WITH DETAIL MHT-UN-212 WILL NOT BE ACCEPTABLE FOR USE IN A 20-YEAR WARRANTED SYSTEM.

USING THIS DETAIL IN CONJUNCTION WITH DETAIL MHT-UN-211 WILL BE ACCEPTABLE FOR USE IN A 20-YEAR WARRANTED SYSTEM.

MULE-HIDE PRODUCTS CO., INC.	**GRAVEL STOP JOINT DETAIL TPO COATED METAL**	**DETAIL NO.:**
	SYSTEMS:	**MHT-UN-213**
	ALL TPO SYSTEMS	REVISION DATE: 10/2013

®

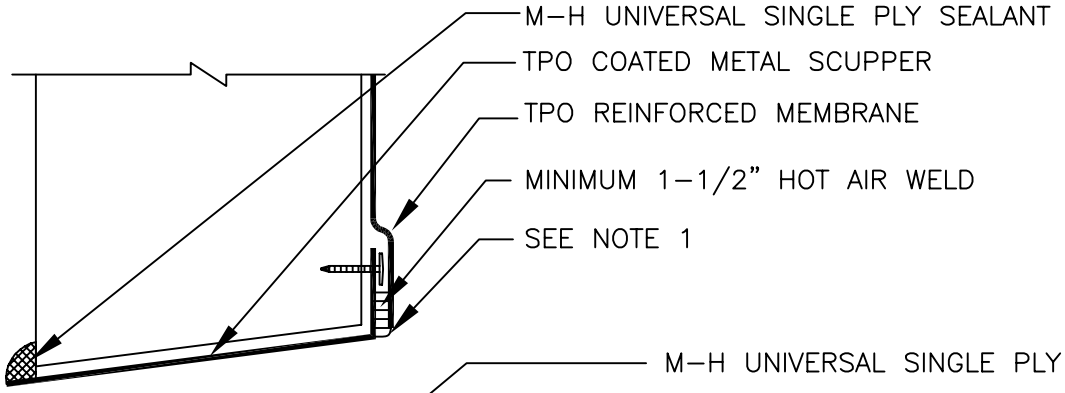

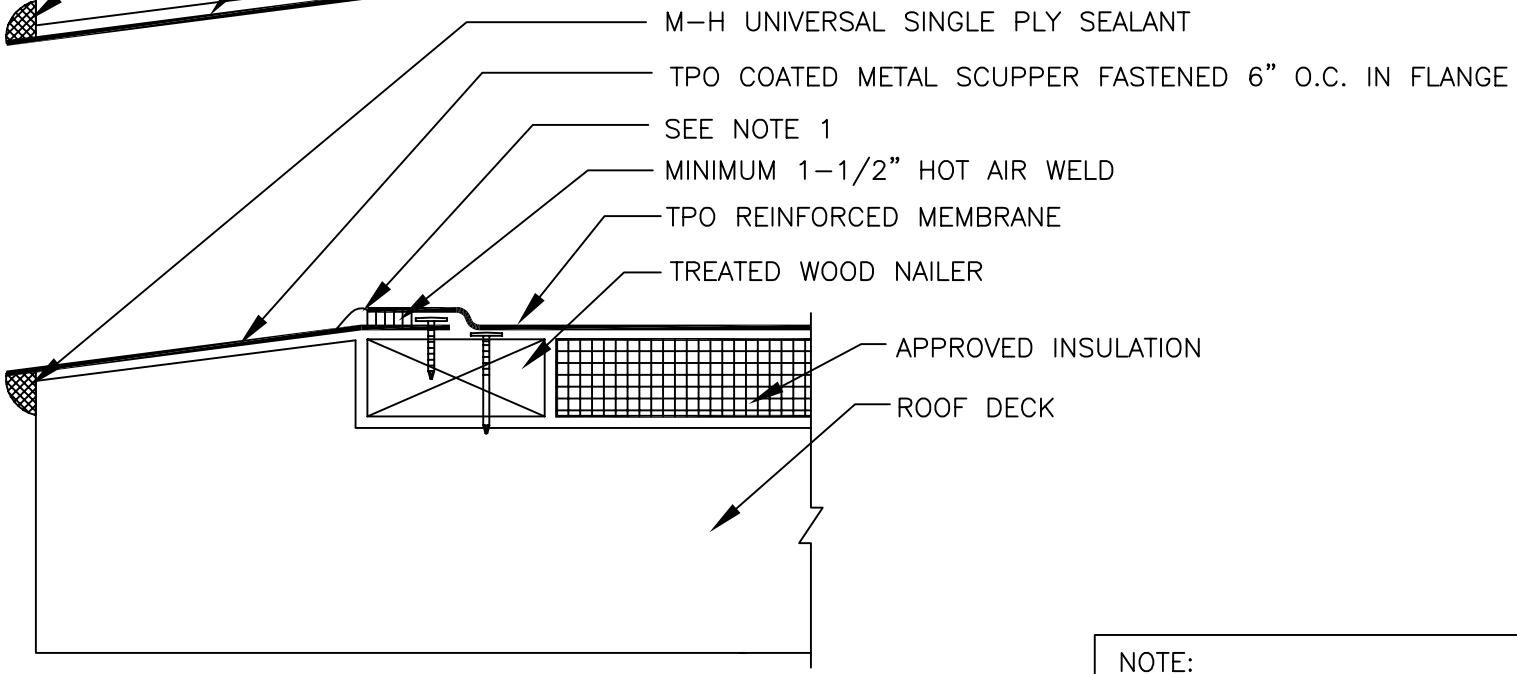

NOTES:

1. APPROXIMATELY ⅛" DIAMETER BEAD OF CUT–EDGE SEALANT IS REQUIRED ON CUT EDGES OF TPO REINFORCED MEMBRANE.

NOTE:

THIS DETAIL IS NOT ACCEPTABLE FOR USE IN A 20–YEAR WARRANTED SYSTEM. FOR A 20–YEAR WARRANTY USE DETAIL MHT–UN–220B

MULE-HIDE PRODUCTS CO., INC.	**THROUGH-WALL SCUPPER TPO COATED METAL**	**DETAIL NO.:**
	SYSTEMS:	**MHT-UN-220A**
	ALL TPO SYSTEMS	REVISION DATE: 10/2013

®

NOTES:

1. WOOD NAILER MUST EXTEND PAST TOTAL WIDTH OF DECK FLANGE.
2. INSTALL WALL FLASHING PRIOR TO SCUPPER INSTALLATION.
3. DISCONTINUE FASTENING PLATES AT SCUPPER OPENING AS SHOWN.
4. METAL SCUPPER BOX MUST HAVE CONTINUOUS SIDES; METAL FLANGE MUST BE CONTINUOUS WITH ROUNDED CORNERS.
5. WATER CUT-OFF MASTIC UNDER SCUPPER FLANGE MUST BE UNDER CONSTANT COMPRESSION.
6. MINIMUM 1-$\frac{1}{2}$" HOT AIR WELD FROM NAIL HEAD.
7. MULE-HIDE UNIVERSAL SINGLE PLY SEALANT IS REQUIRED AT FLASHING EDGE ON SCUPPER EDGE. MULE-HIDE TAPE PRIMER MUST BE USED TO PREPARE SURFACES PRIOR TO APPLYING UNIVERSAL SINGLE PLY SEALANT.

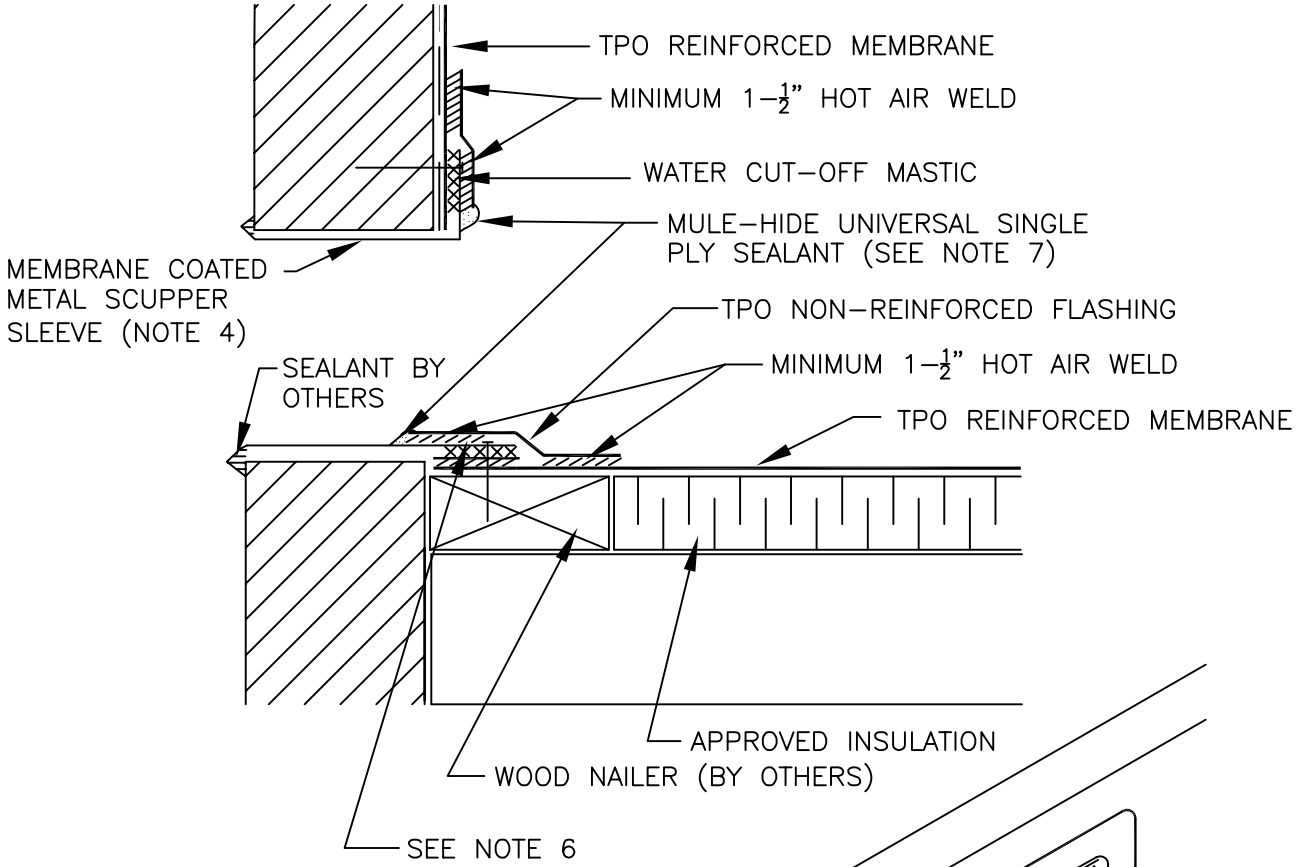

NOTE:

THIS DETAIL IS ACCEPTABLE FOR USE IN A 20-YEAR WARRANTED SYSTEM

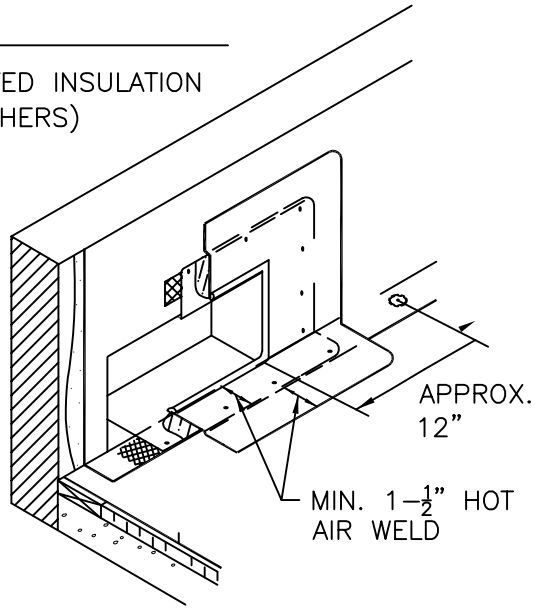

MULE-HIDE PRODUCTS CO., INC.	**THROUGH-WALL SCUPPER TPO COATED METAL**	**DETAIL NO.:**
	SYSTEMS:	**MHT-UN-220B**
	ALL TPO SYSTEMS	REVISION DATE: 10/2013

®

NOTES:

1. WOOD NAILER MUST EXTEND PAST TOTAL WIDTH OF DECK FLANGE.
2. INSTALL WALL FLASHING PRIOR TO SCUPPER INSTALLATION.
3. DISCONTINUE FASTENING PLATES AT SCUPPER OPENING AS SHOWN.
4. METAL SCUPPER BOX MUST HAVE CONTINUOUS SIDES; METAL FLANGE MUST BE CONTINUOUS WITH ROUNDED CORNERS.
5. CLEAN METAL SCUPPER FLANGE WITH MULE-HIDE WEATHERED MEMBRANE CLEANER TO REMOVE ANY OILS BEFORE APPLYING MULE-HIDE TAPE PRIMER.
6. WATER CUT-OFF MASTIC UNDER SCUPPER FLANGE MUST BE UNDER CONSTANT COMPRESSION.
7. MINIMUM 2" SPLICE FROM NAIL HEAD.
8. MULE-HIDE UNIVERSAL SINGLE PLY SEALANT IS REQUIRED AT FLASHING EDGE ON SCUPPER EDGE. MULE-HIDE TAPE PRIMER MUST BE USED TO PREPARE SURFACES PRIOR TO APPLYING MULE-HIDE UNIVERSAL SINGLE PLY SEALANT.

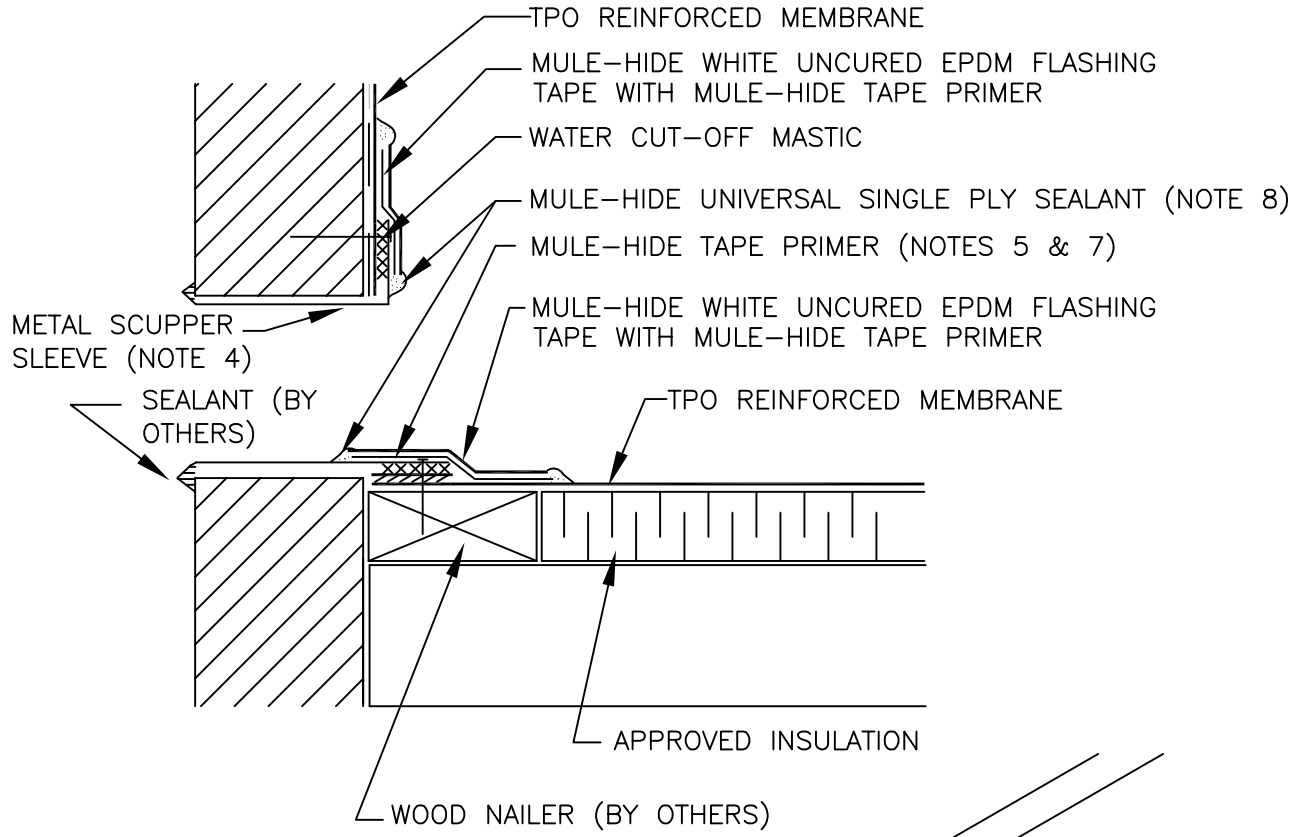

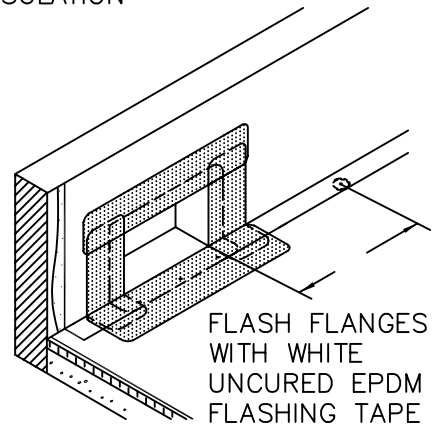

NOTE:

THIS DETAIL IS ACCEPTABLE FOR USE IN A 20-YEAR WARRANTED SYSTEM

MULE-HIDE PRODUCTS CO., INC.	**NEW METAL THROUGH-WALL SCUPPER WITH WHITE UNCURED EPDM** **SYSTEMS:** **ALL TPO SYSTEMS**	**DETAIL NO.:** **MHT-UN-220C** REVISION DATE: 10/2013

®

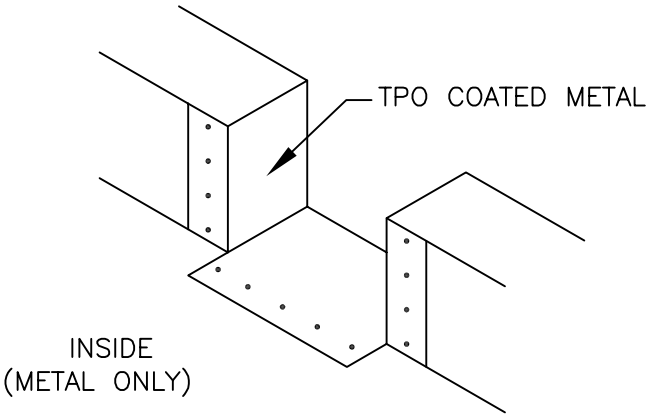

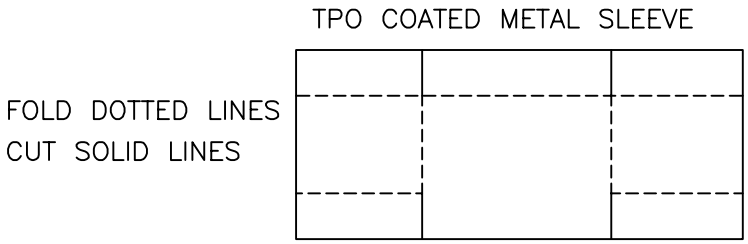

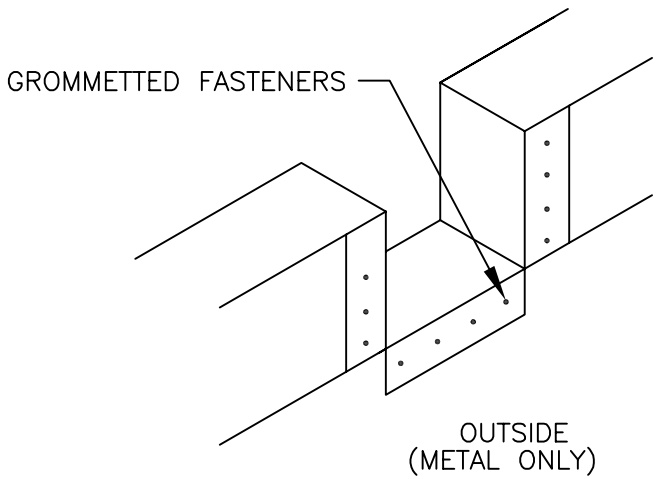

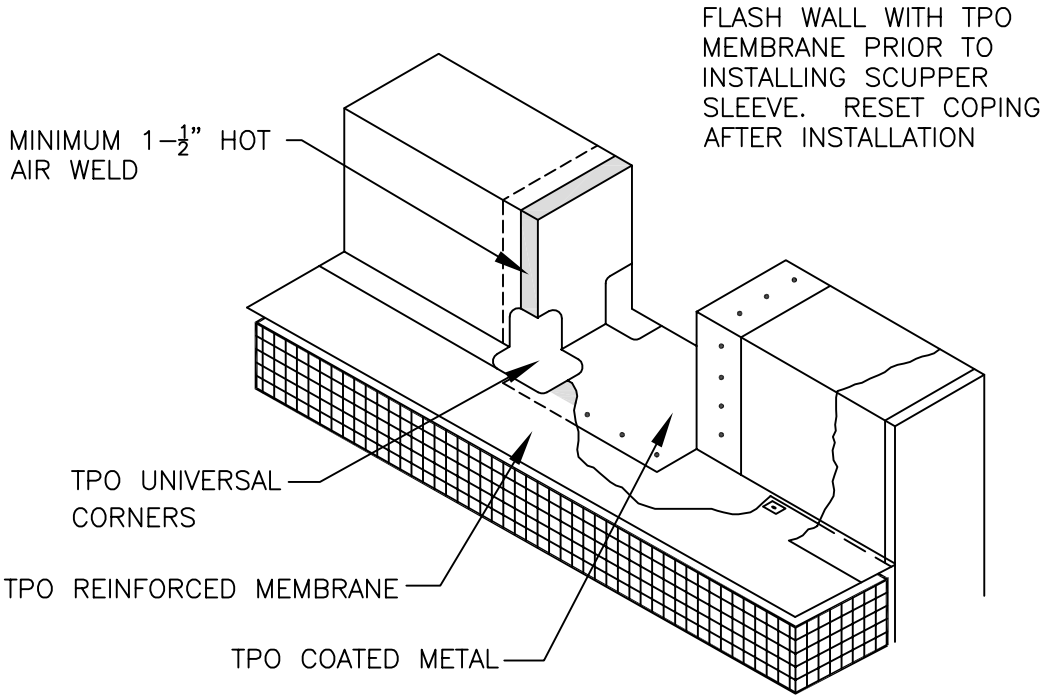

NOTE:

THIS DETAIL IS ACCEPTABLE FOR USE IN A 20-YEAR WARRANTED SYSTEM

MULE-HIDE PRODUCTS CO., INC.	**THROUGH-WALL OPEN SCUPPER TPO COATED METAL** **SYSTEMS:** **ALL TPO SYSTEMS**	**DETAIL NO.:** **MHT-UN-221** REVISION DATE: 10/2013

®

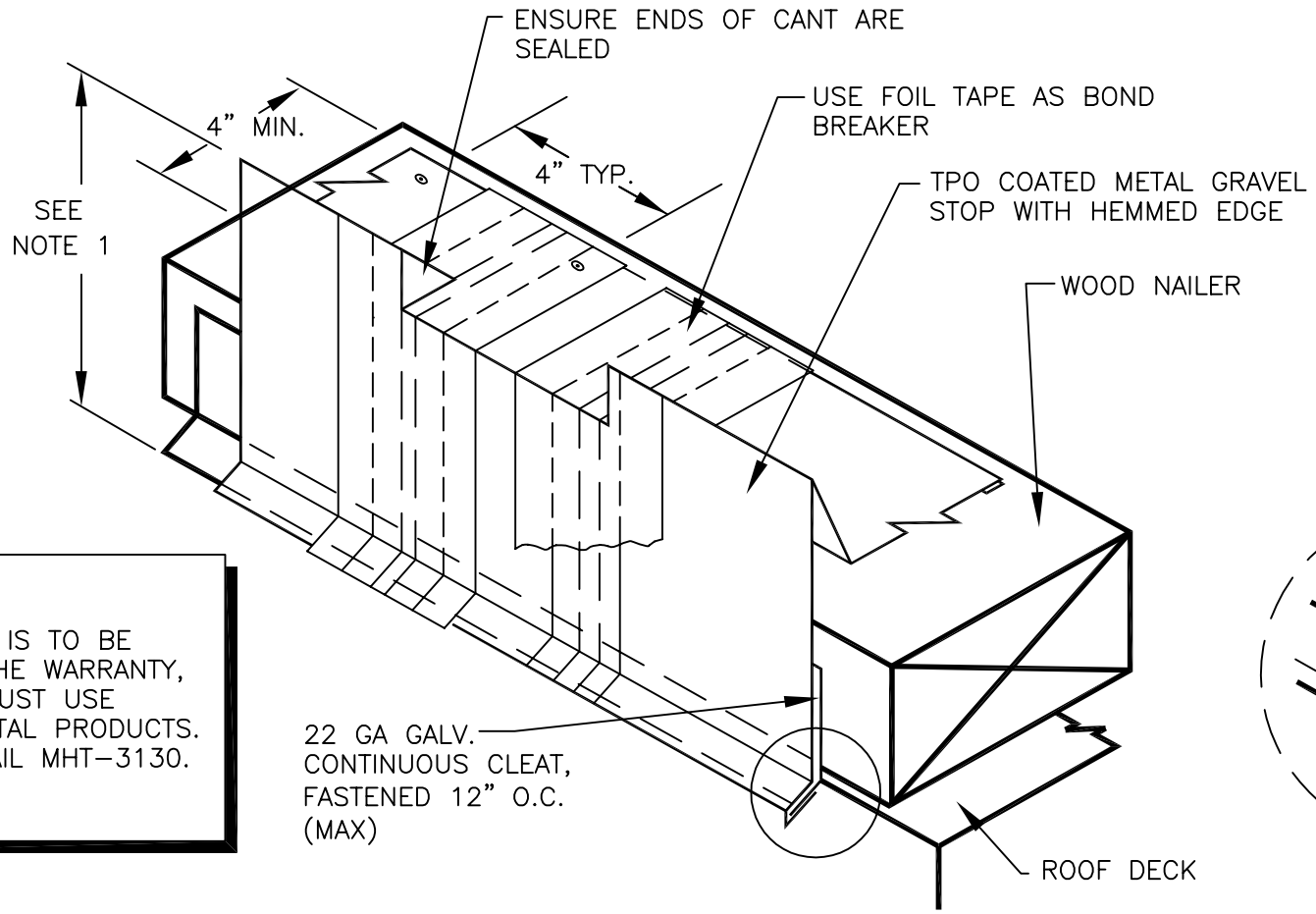

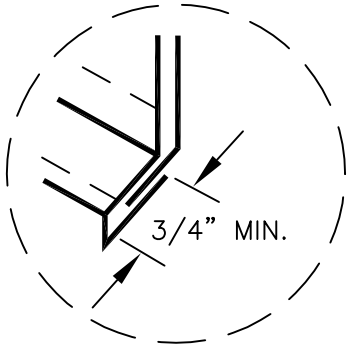

NOTE:

IF SHEETMETAL IS TO BE INCLUDED IN THE WARRANTY, CONTRACTOR MUST USE MULE-HIDE METAL PRODUCTS. REFER TO DETAIL MHT-3130.

NOTES:

1. MAXIMUM FACE DIMENSION SHOULD BE 5" TO PREVENT DISTORTION FROM "OIL CANNING." IF SURFACE DISTORTION IS ACCEPTABLE, FACE DIMENSION MAY BE INCREASED TO 8".

2. FOR FASCIAS GREATER THAN 8", INSTALL IN TWO SECTIONS.

NOTE:

USING THIS DETAIL IN CONJUNCTION WITH DETAIL MHT-UN-212 WILL NOT BE ACCEPTABLE FOR USE IN A 20-YEAR WARRANTED SYSTEM.

USING THIS DETAIL IN CONJUNCTION WITH DETAIL MHT-UN-211 WILL BE ACCEPTABLE FOR USE IN A 20-YEAR WARRANTED SYSTEM.

MULE-HIDE PRODUCTS CO., INC.	**GRAVEL STOP SCUPPER TPO COATED METAL**	**DETAIL NO.:**
	SYSTEMS:	**MHT-UN-222**
	ALL TPO SYSTEMS	REVISION DATE: 10/2013

®

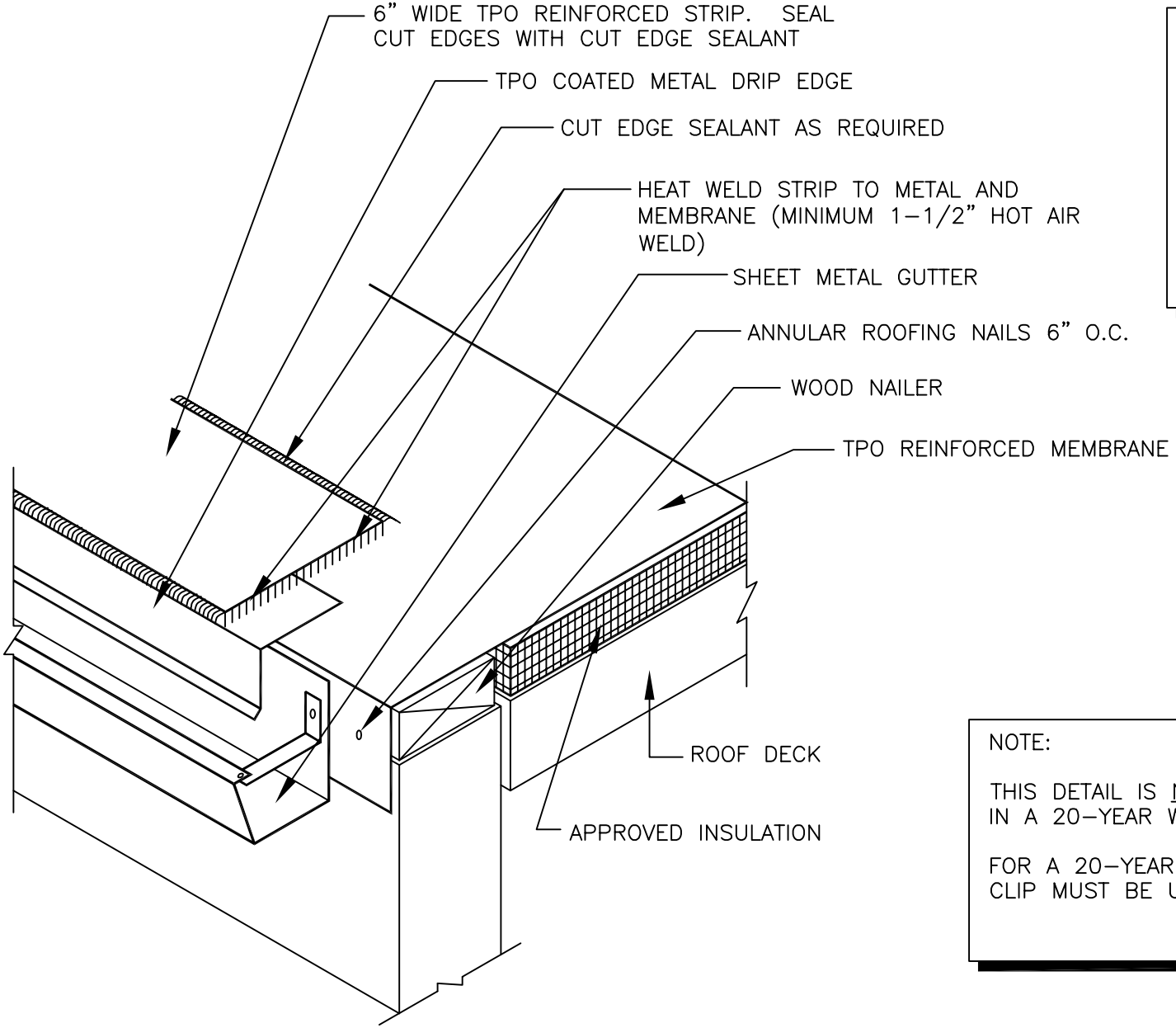

NOTE:

IF SHEETMETAL IS TO BE INCLUDED IN THE WARRANTY, CONTRACTOR MUST USE MULE-HIDE METAL PRODUCTS. REFER TO DETAILS MHSM-2091 AND MHT-3120.

NOTE:

THIS DETAIL IS NOT ACCEPTABLE FOR USE IN A 20-YEAR WARRANTED SYSTEM.

FOR A 20-YEAR WARRANTY, A CONTINUOUS CLIP MUST BE USED WITH THE DRIP EDGE.

MULE-HIDE PRODUCTS CO., INC.	**GUTTER DRIP EDGE TPO COATED METAL**	**DETAIL NO.:**
	SYSTEMS:	**MHT-UN-232**
	ALL TPO SYSTEMS	REVISION DATE: 10/2013

®

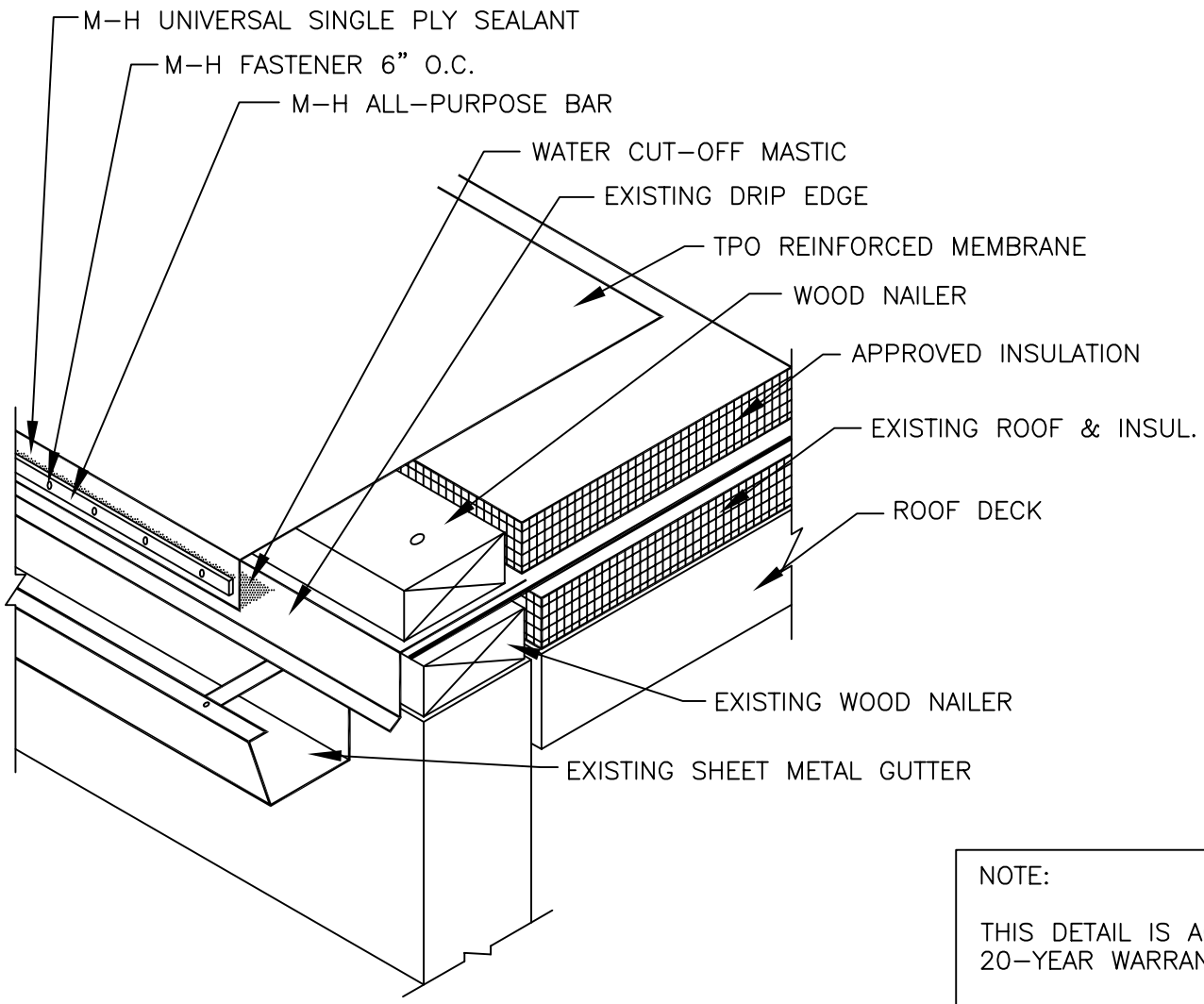

NOTE:

THIS DETAIL IS ACCEPTABLE FOR USE IN A 20–YEAR WARRANTED SYSTEM

MULE-HIDE PRODUCTS CO., INC.	**GUTTER / TERMINATION BAR RECOVER** **SYSTEMS:** **ALL RECOVER TPO SYSTEMS**	**DETAIL NO.:** **MHT-UN-234** REVISION DATE: 10/2013

®

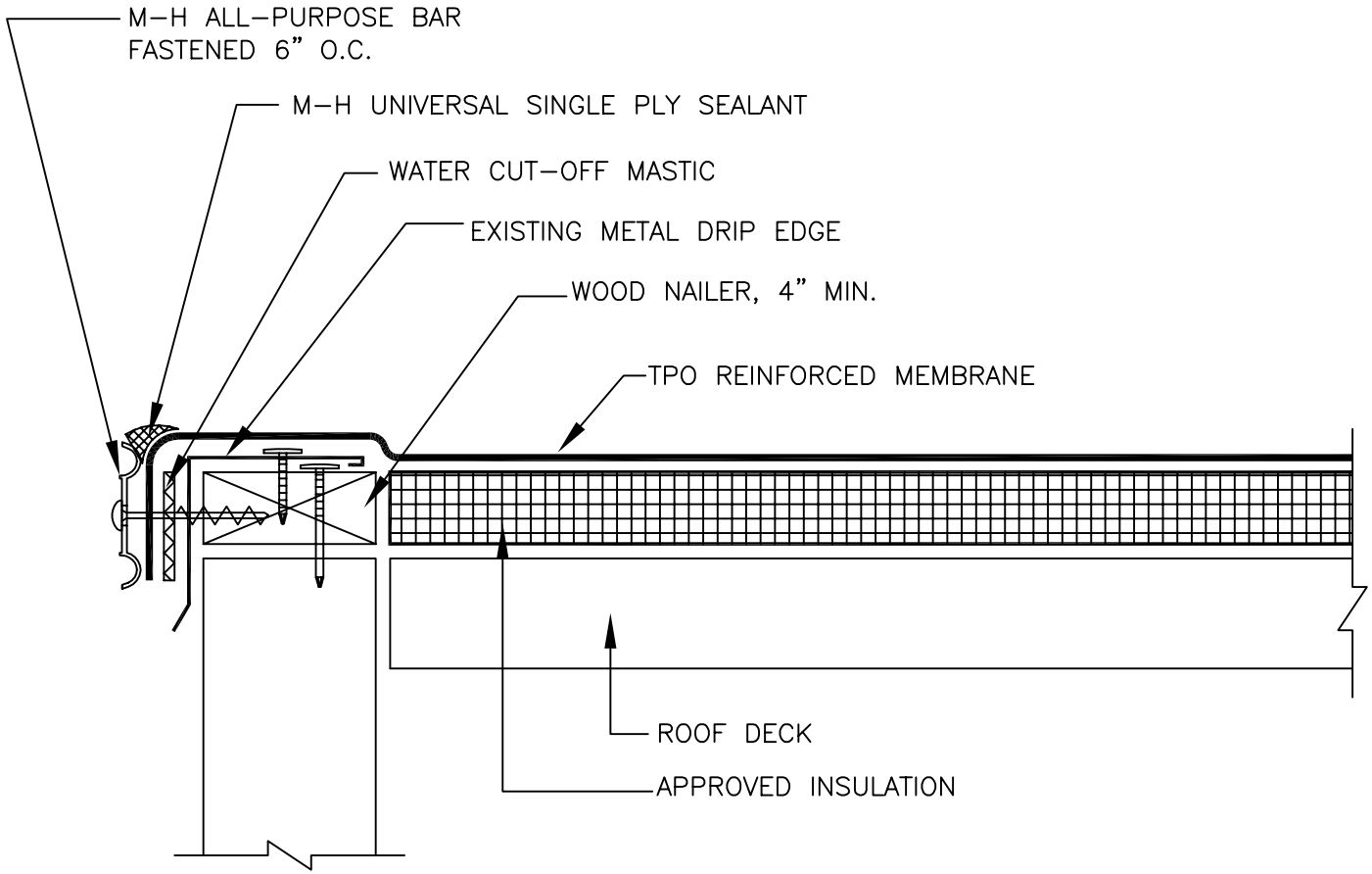

NOTE:

THIS DETAIL IS ACCEPTABLE FOR USE IN A 20–YEAR WARRANTED SYSTEM

MULE-HIDE PRODUCTS CO., INC.	**EDGE TERMINATION ALL-PURPOSE BAR** **SYSTEMS:** **ALL RECOVER TPO SYSTEMS**	**DETAIL NO.:** **MHT-UN-240** REVISION DATE: 10/2013

®

NOTE:

IF SHEETMETAL IS TO BE INCLUDED IN THE WARRANTY, CONTRACTOR MUST USE MULE–HIDE METAL PRODUCTS. REFER TO DETAILS MHSM–6050, MHSM–6052, MHSM–6054A&B, OR MHSM–6056..

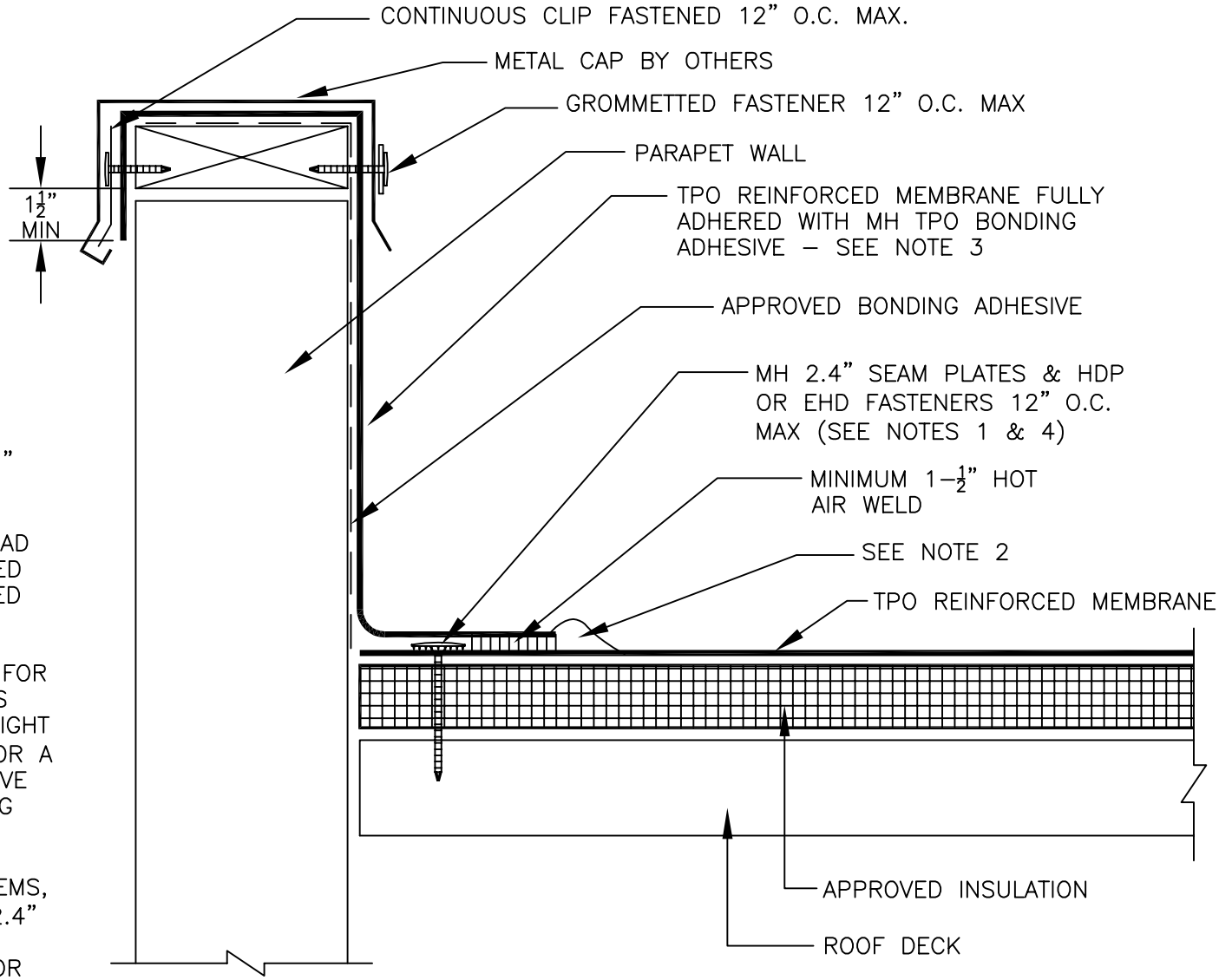

NOTES:

1. POSITION SEAM PLATES 1/2" TO 1" FROM EDGE OF DECK MEMBRANE.
2. APPROXIMATELY 1/8" DIAMETER BEAD OF CUT–EDGE SEALANT IS REQUIRED ON CUT EDGES OF TPO REINFORCED MEMBRANE.
3. WHEN COUNTERFLASHING IS USED FOR TERMINATION, BONDING ADHESIVE IS NOT REQUIRED WHEN FLASHING HEIGHT IS 12" OR LESS. WHEN COPING OR A TERMINATION BAR IS USED, ADHESIVE MAY BE ELIMINATED WHEN FLASHING HEIGHT IS 18" OR LESS.
4. ON MECHANICALLY FASTENED SYSTEMS, MH HDP OR EHD FASTNERS AND 2.4" SEAM PLATES ARE REQUIRED AS A MINIMUM. CONTACT MULE–HIDE FOR TPO REINFORCED MEMBRANE FASTENING CRITERIA AND PROPER FASTENERS FOR EACH DECK TYPE.

MULE-HIDE PRODUCTS CO., INC.	**PARAPET WALL METAL COPING CAP**	**DETAIL NO.:**
	SYSTEMS:	**MHT-UN-301**
	ALL TPO SYSTEMS	REVISION DATE: 10/2013

®

NOTE:

IF SHEETMETAL IS TO BE INCLUDED IN THE WARRANTY, CONTRACTOR MUST USE MULE–HIDE METAL PRODUCTS. REFER TO DETAILS MHSM–6050, MHSM–6052, MHSM–6054A & B, OR MHSM–6056..

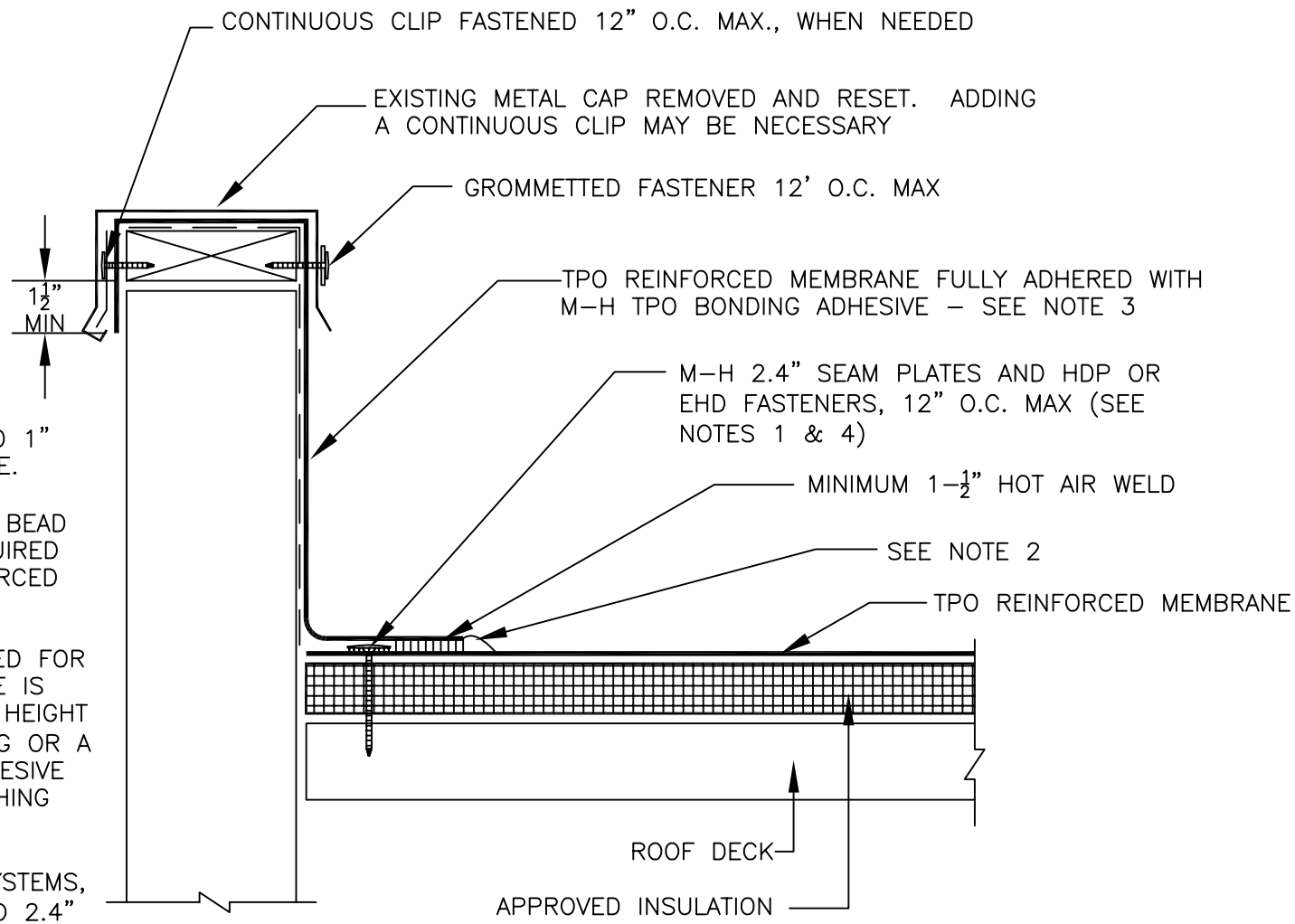

NOTES:

1. POSITION SEAM PLATES 1/2" TO 1" FROM EDGE OF DECK MEMBRANE.
2. APPROXIMATELY 1/8" DIAMETER BEAD OF CUT–EDGE SEALANT IS REQUIRED ON CUT EDGES OF TPO REINFORCED MEMBRANE.
3. WHEN COUNTERFLASHING IS USED FOR TERMINATION, BONDING ADHESIVE IS NOT REQUIRED WHEN FLASHING HEIGHT IS 12" OR LESS. WHEN COPING OR A TERMINATION BAR IS USED, ADHESIVE MAY BE ELIMINATED WHEN FLASHING HEIGHT IS 18" OR LESS.
4. ON MECHANICALLY FASTENED SYSTEMS, MH HDP OR EHD FASTNERS AND 2.4" SEAM PLATES ARE REQUIRED AS A MINIMUM. CONTACT MULE–HIDE FOR TPO REINFORCED MEMBRANE FASTENING CRITERIA AND PROPER FASTENERS FOR EACH DECK TYPE.

MULE-HIDE PRODUCTS CO., INC.	**PARAPET WALL EXISTING COPING CAP**	**DETAIL NO.:**
	SYSTEMS:	**MHT-UN-302**
	ALL TPO SYSTEMS	REVISION DATE: 10/2013

®

NOTE:

IF SHEETMETAL IS TO BE INCLUDED IN THE WARRANTY, CONTRACTOR MUST USE MULE–HIDE METAL PRODUCTS. REFER TO DETAILS MHSM–6050, MHSM–6052, MHSM–6054A & B, OR MHSM–6056..

NOTES:

1. POSITION SEAM PLATES 1/2" TO 1" FROM EDGE OF DECK MEMBRANE.
2. APPROXIMATELY 1/8" DIAMETER BEAD OF CUT–EDGE SEALANT IS REQUIRED ON CUT EDGES OF TPO REINFORCED MEMBRANE.
3. WHEN COUNTERFLASHING IS USED FOR TERMINATION, BONDING ADHESIVE IS NOT REQUIRED WHEN FLASHING HEIGHT IS 12" OR LESS. WHEN COPING OR A TERMINATION BAR IS USED, ADHESIVE MAY BE ELIMINATED WHEN FLASHING HEIGHT IS 18" OR LESS.
4. ON MECHANICALLY FASTENED SYSTEMS, MH HDP OR EHD FASTNERS AND 2.4" SEAM PLATES ARE REQUIRED AS A MINIMUM. CONTACT MULE–HIDE FOR TPO REINFORCED MEMBRANE FASTENING CRITERIA AND PROPER FASTENERS FOR EACH DECK TYPE.

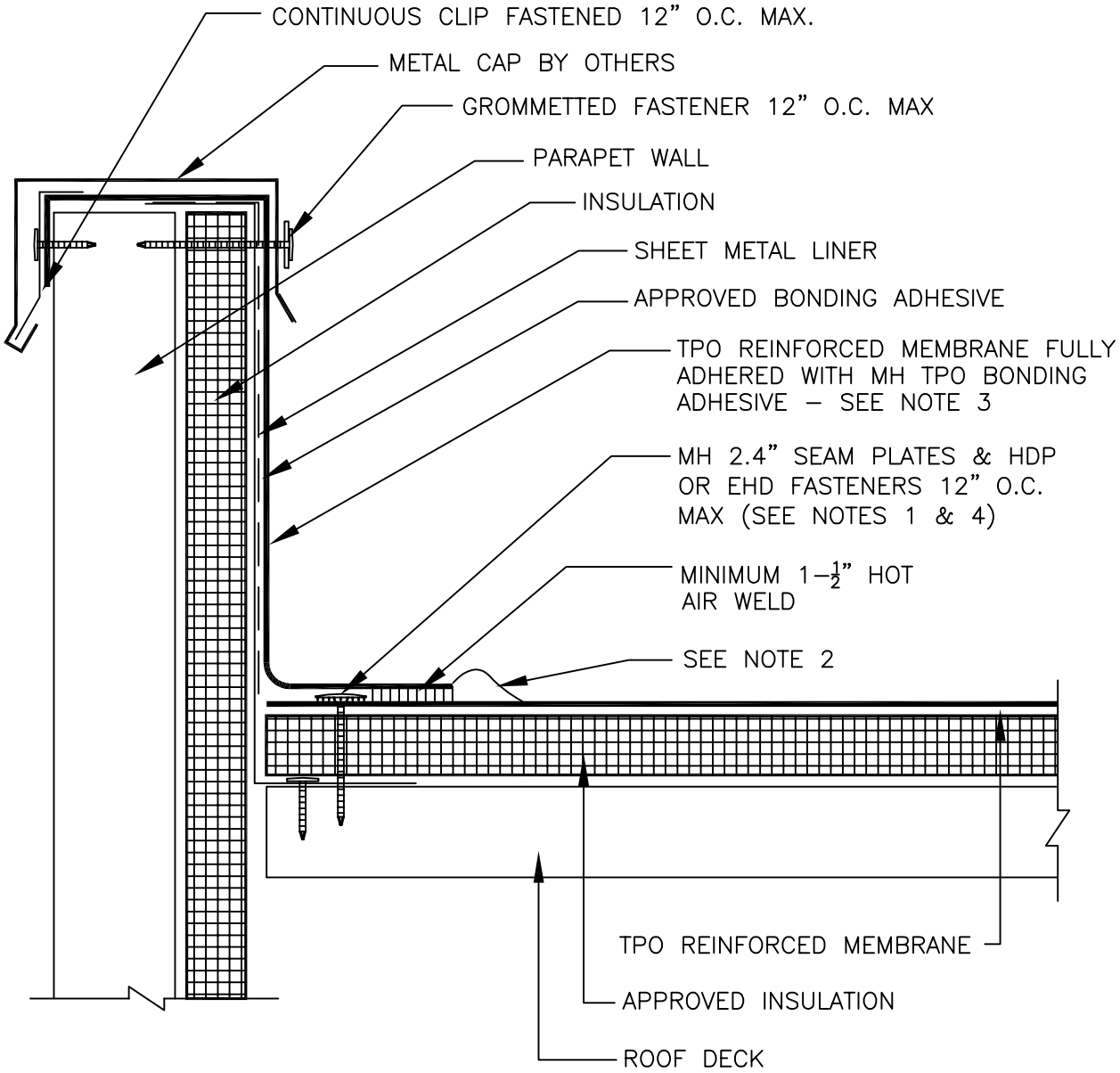

MULE-HIDE PRODUCTS CO., INC.	INSULATED PARAPET WALL WITH METAL COPING CAP SYSTEMS: ALL TPO SYSTEMS	DETAIL NO.: MHT-UN-303 REVISION DATE: 10/2013

®

NOTES:

1. POSITION SEAM PLATES 1/2" TO 1" FROM EDGE OF DECK MEMBRANE.

2. APPROXIMATELY 1/8" DIAMETER BEAD OF CUT–EDGE SEALANT IS REQUIRED ON CUT EDGES OF TPO REINFORCED MEMBRANE.

3. WHEN COUNTERFLASHING IS USED FOR TERMINATION, BONDING ADHESIVE IS NOT REQUIRED WHEN FLASHING HEIGHT IS 12" OR LESS. WHEN COPING OR A TERMINATION BAR IS USED, ADHESIVE MAY BE ELIMINATED WHEN FLASHING HEIGHT IS 18" OR LESS.

4. ON MECHANICALLY FASTENED SYSTEMS, MH HDP OR EHD FASTNERS AND 2.4" SEAM PLATES ARE REQUIRED AS A MINIMUM. CONTACT MULE–HIDE FOR TPO REINFORCED MEMBRANE FASTENING CRITERIA AND PROPER FASTENERS FOR EACH DECK TYPE.

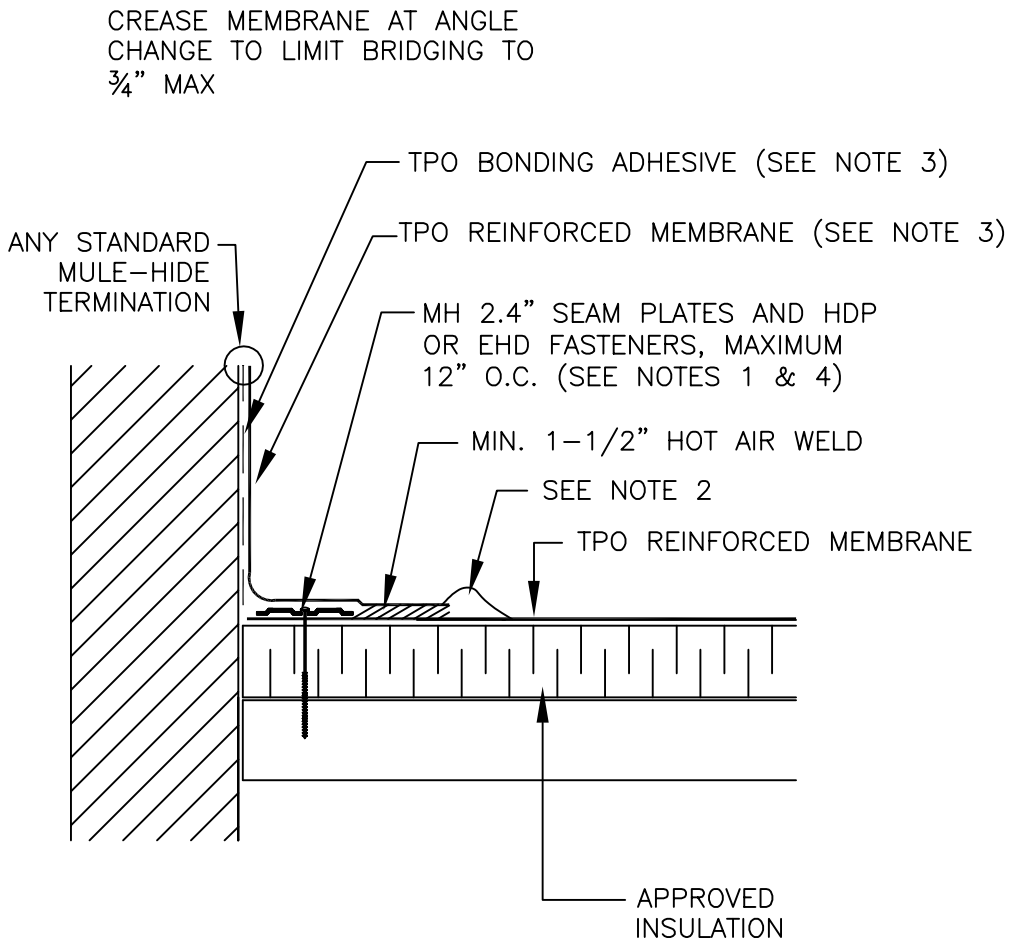

MULE-HIDE PRODUCTS CO., INC.	**BASE ATTACHMENT WITH PLATES AND FASTENERS** **SYSTEMS:** **ALL TPO SYSTEMS**	**DETAIL NO.:** **MHT-UN-305A** REVISION DATE: 10/2013

®

NOTES:

1. ON MECHANICALLY FASTENED SYSTEMS, MH HDP OR EHD FASTENERS AND 2.4" SEAM PLATES ARE REQUIRED AS A MINIMUM. CONTACT MULE-HIDE FOR TPO REINFORCED MEMBRANE FASTENING CRITERIA AND PROPER FASTENERS FOR EACH DECK TYPE.

2. WHEN COUNTERFLASHING IS USED FOR TERMINATION, BONDING ADHESIVE IS NOT REQUIRED WHEN FLASHING HEIGHT IS 12" OR LESS. WHEN COPING OR TERMINATION BAR IS USED, ADHESIVE MAY BE ELIMINATED WHEN FLASHING HEIGHT IS 18" OR LESS.

3. RUSS PRODUCTS CANNOT BE USED ON FLEECEBACK OR SELF ADHERING MEMBRANES.

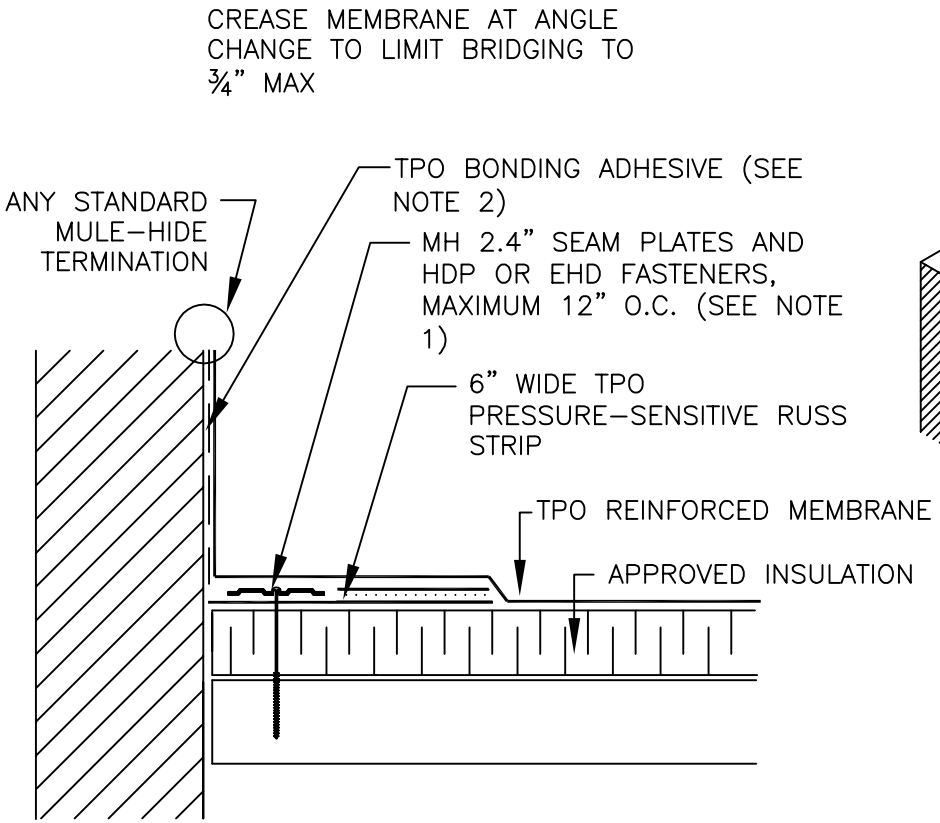

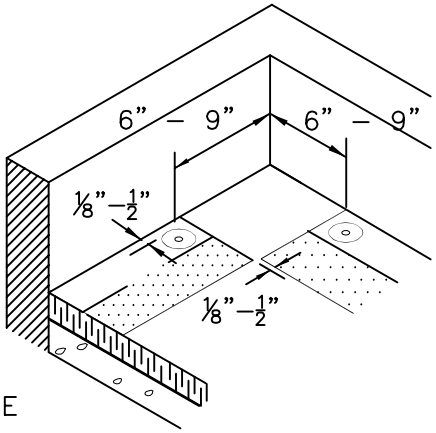

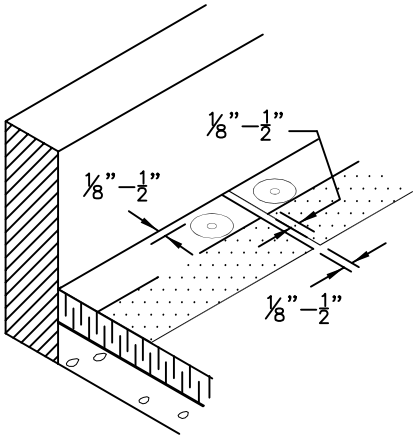

MH TAPE PRIMER MUST BE APPLIED TO BACK SIDE OF TPO REINFORCED MEMBRANE PRIOR TO ADHERING TPO REINFORCED MEMBRANE TO PRESSURE-SENSITIVE RUSS STRIP

MULE-HIDE PRODUCTS CO., INC.	**BASE ATTACHMENT USING 6" RUSS**	**DETAIL NO.:**
	SYSTEMS: ALL TPO SYSTEMS EXCEPT FLEECEBACK AND SELF ADHERING	**MHT-UN-305B**
		REVISION DATE: 10/2013

®

CREASE MEMBRANE AT ANGLE CHANGE TO LIMIT BRIDGING TO ¾" MAX

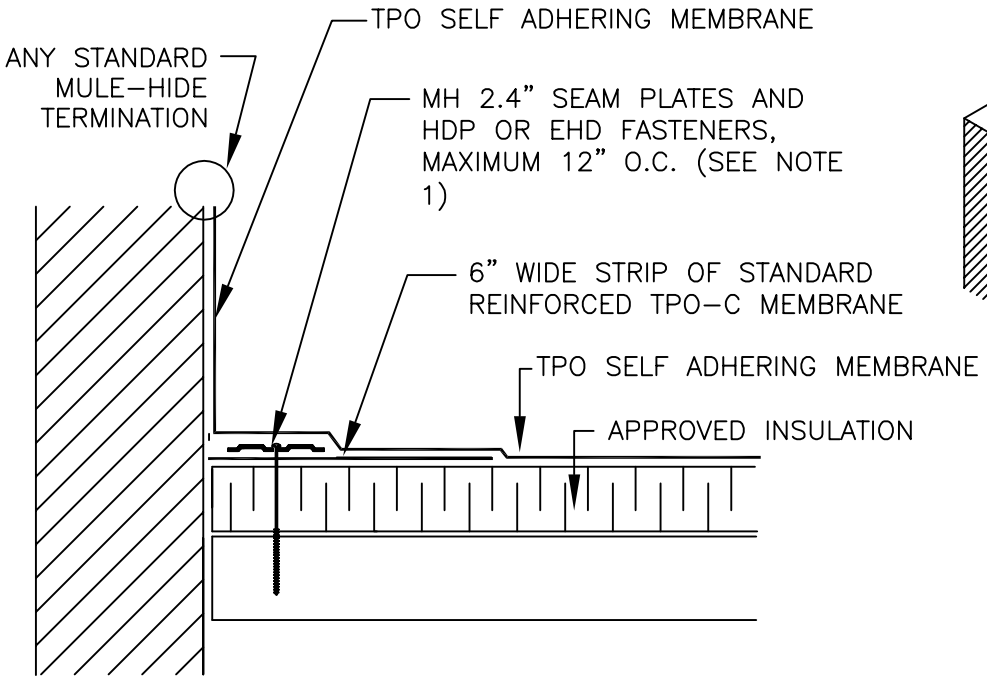

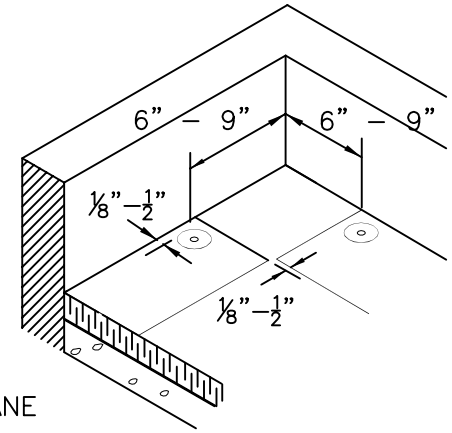

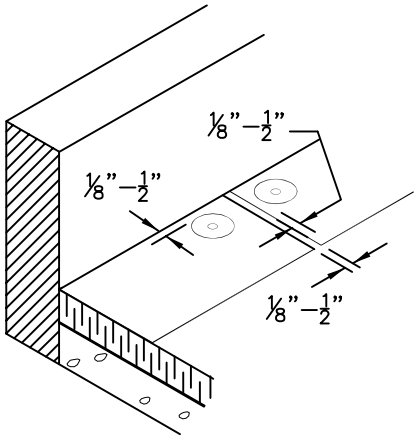

NOTES:

1. CONTACT MULE–HIDE FOR FASTENING CRITERIA AND PROPER FASTENERS FOR EACH DECK TYPE.
2. RUSS PRODUCTS CANNOT BE USED ON FLEECEBACK OR SELF ADHERING MEMBRANES.

MH TPO PRIMER IS NOT NEEDED TO PREPARE THE 6" STRIP OF STANDARD REINFORCED TPO–C MEMBRANE. HOWEVER, THE 6" STRIP OF STANDARD REINFORCED TPO–C MEMBRANE MUST BE CLEAN AND DRY.

MULE-HIDE PRODUCTS CO., INC.	**BASE ATTACHMENT USING 6" STANDARD TPO-C MEMBRANE**	**DETAIL NO.:**
	SYSTEMS: TPO SELF ADHERING SYSTEMS ONLY	**MHT-FA-305C**
		REVISION DATE: 3/2014

®

NOTES:

1. DETAILS TO BE USED IN CONJUNCTION WITH STANDARD GUIDE SPECIFICATIONS CONTAINING REQUIREMENTS FOR NAILERS, INSULATION, SLIPSHEETS, ETC.

2. ACCORDING TO PROJECT CONDITIONS, THE SPECIFIER AND/OR APPLICATOR MUST IDENTIFY THE WIDTH DIMENSIONS OF THE ROOF PERIMETERS AND CORNERS IN ACCORDANCE WITH FM DATA SHEETS 1–28 AND 1–29 BASED UPON THE FOLLOWING FORMULA:

   - 0.4 TIMES THE BUILDING HEIGHT OR
   - 0.1 TIMES THE BUILDING'S LESSER PLAN DIMENSION, WHICHEVER IS SMALLER

   THE MINIMUM PERIMETER/CORNER WIDTH SHALL BE NO LESS THAN 3 FEET

3. FOR STEEL DECKS:
   - ALL FASTENERS MUST ENGAGE TOP FLUTES OF DECK
   - IN THE FIELD OF THE ROOF, SEAMS (FASTENER ROWS) MUST RUN PERPENDICULAR TO THE DECK FLUTES
   - PERIMETER HALF SHEETS ARE TO BE USED ONLY ON SIDES OF ROOF WHEN THE SEAMS RUN PERPENDICULAR TO THE DECK FLUTES

4. 10" WIDE TPO PRESSURE–SENSITIVE RUSS CAN BE USED BENEATH FIELD SHEETS IN LIEU OF FASTENERS AND PLATES INSTALLED THROUGH THE MEMBRANE OR PERIMETER HALF SHEETS.

5. USE ADDITIONAL HALF SHEETS INSTALLED WITH SEAMS RUNNING PERPENDICULAR TO THE DECK FLUTES TO MEET OR SLIGHTLY EXCEED FM PERIMETER DIMENSION REQUIREMENTS AS OUTLINED IN NOTE 2 ABOVE. EXAMPLE: A 14' PERIMETER DIMENSION WOULD REQUIRE FOUR 4' PERIMETER SHEETS (14' DIVIDED BY 3'6" COVERAGE PROVIDED BY A 4' WIDE SHEET)

REFER TO MULE–HIDE TECHNICAL BULLETIN #TPO–MA02–2006 FOR PERIMETER ENHANCEMENT REQUIREMENTS

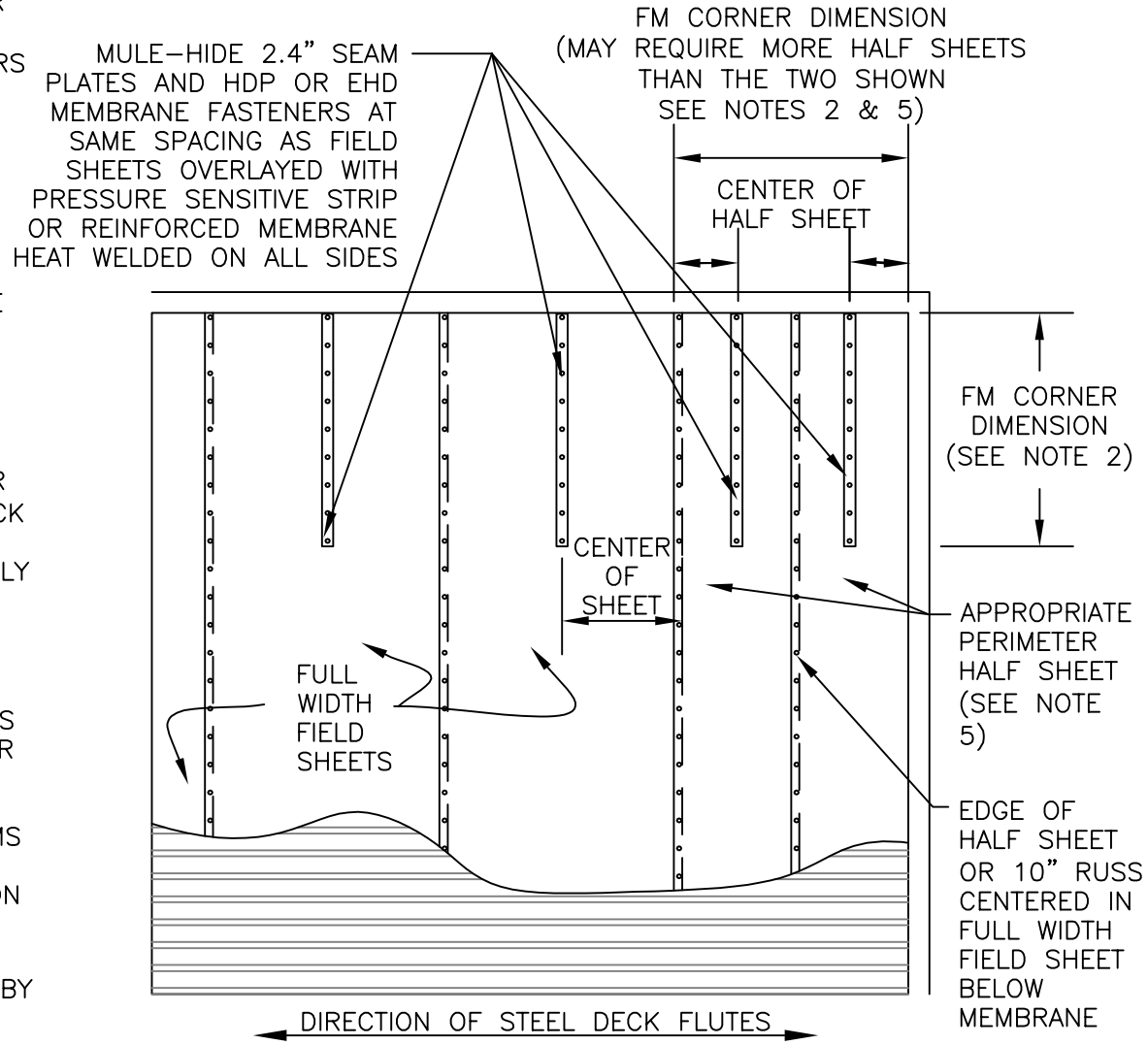

MULE-HIDE PRODUCTS CO., INC.	**FM CORNER / PERIMETER FASTENING ENHANCEMENTS - OPTION A** **SYSTEMS:** **TPO MECHANICALLY ATTACHED**	**DETAIL NO.:** **MHT-FM-308A** REVISION DATE: 10/2013

®

NOTES:

1. DETAILS TO BE USED IN CONJUNCTION WITH STANDARD GUIDE SPECIFICATIONS CONTAINING REQUIREMENTS FOR NAILERS, INSULATION, SLIPSHEETS, ETC.

2. ACCORDING TO PROJECT CONDITIONS, THE SPECIFIER AND/OR APPLICATOR MUST IDENTIFY THE WIDTH DIMENSIONS OF THE ROOF PERIMETERS AND CORNERS IN ACCORDANCE WITH FM DATA SHEETS 1–28 AND 1–29 BASED UPON THE FOLLOWING FORMULA:

   - 0.4 TIMES THE BUILDING HEIGHT OR
   - 0.1 TIMES THE BUILDING'S LESSER PLAN DIMENSION, WHICHEVER IS SMALLER

   THE MINIMUM PERIMETER/CORNER WIDTH SHALL BE NO LESS THAN 3 FEET

3. FOR STEEL DECKS:
   - ALL FASTENERS MUST ENGAGE TOP FLUTES OF DECK
   - IN THE FIELD OF THE ROOF, SEAMS (FASTENER ROWS) MUST RUN PERPENDICULAR TO THE DECK FLUTES
   - PERIMETER HALF SHEETS ARE TO BE USED ONLY WHEN THE SEAMS RUN PERPENDICULAR TO THE DECK FLUTES

4. 10" WIDE TPO PRESSURE–SENSITIVE RUSS CAN BE USED BENEATH FIELD OR PERIMETER SHEETS IN LIEU OF FASTENERS AND PLATES INSTALLED THROUGH THE MEMBRANE.

5. USE ADDITIONAL HALF SHEETS INSTALLED WITH SEAMS RUNNING PERPENDICULAR TO THE DECK FLUTES TO MEET OR SLIGHTLY EXCEED FM PERIMETER DIMENSION REQUIREMENTS AS OUTLINED IN NOTE 2 ABOVE. EXAMPLE: A 14' PERIMETER DIMENSION WOULD REQUIRE FOUR 4' PERIMETER SHEETS (14' DIVIDED BY 3'6" COVERAGE PROVIDED BY A 4' WIDE SHEET)

6.

REFER TO MULE–HIDE TECHNICAL BULLETIN #TPO–MA02–2006 FOR PERIMETER ENHANCEMENT REQUIREMENTS

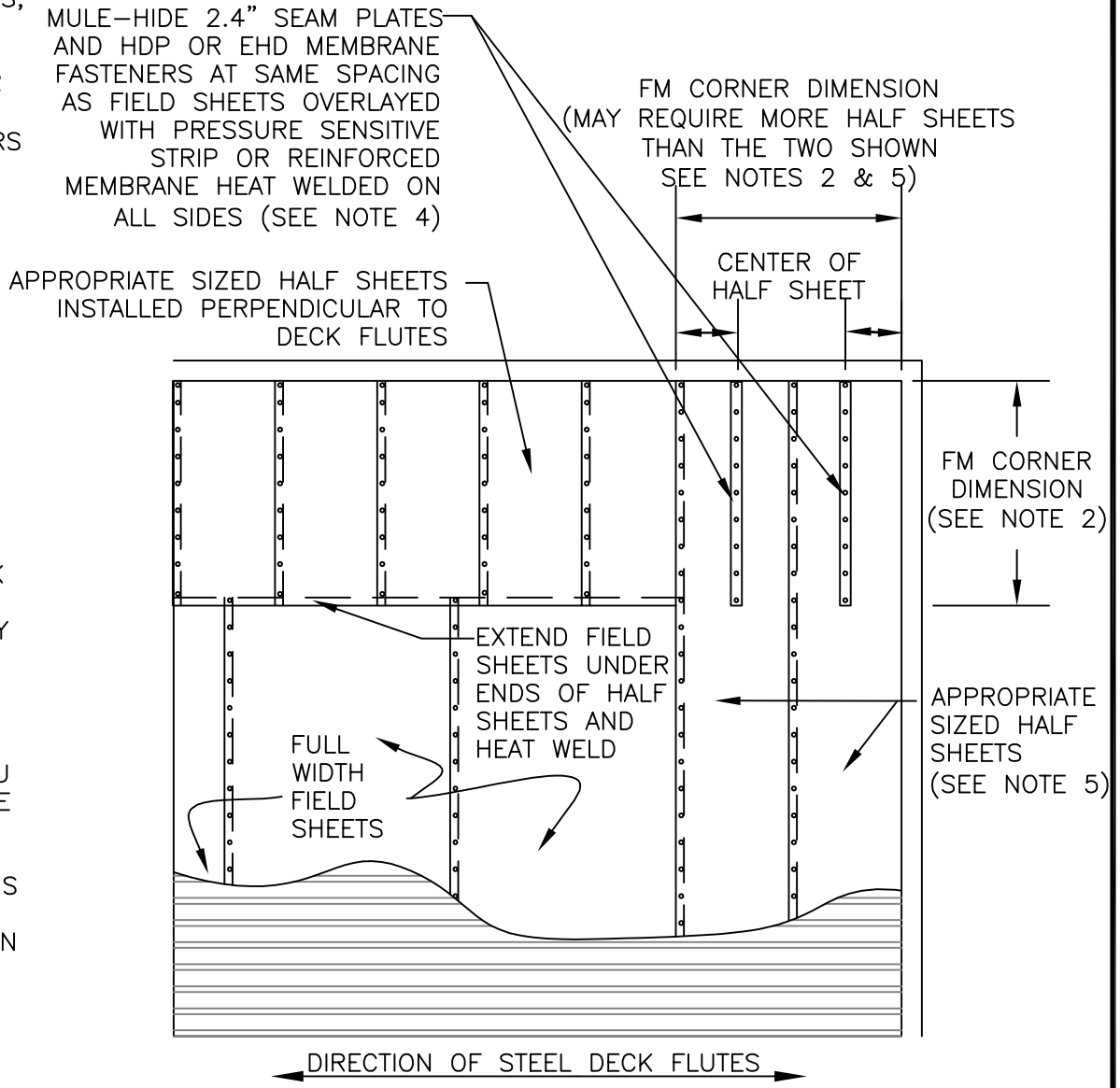

MULE-HIDE PRODUCTS CO., INC.	**FM CORNER / PERIMETER FASTENING ENHANCEMENTS - OPTION B** **SYSTEMS:** **TPO MECHANICALLY ATTACHED**	**DETAIL NO.:** **MHT-FM-308B** REVISION DATE: 10/2013

®

NOTES:

1. WHEN USING MULE-HIDE ALL-PURPOSE BAR UNDER COUNTERFLASHING TO TERMINATE WALL FLASHING, TPO BONDING ADHESIVE MAY BE ELIMINATED WHEN FLASHING HEIGHT IS 18" OR LESS.

2. FLASHING SHALL BE A MINIMUM OF 8" HIGH WHEN POSSIBLE. REUSE OF EXISTING COUNTERFLASHING IS ACCEPTABLE IF ABOVE MAXIMUM FLOOD LEVEL AND METAL IS IN GOOD CONDITION. FUNCTIONAL WEEP HOLES MUST NOT BE BLOCKED.

3. APPROXIMATELY 1/8" DIAMETER BEAD OF CUT-EDGE SEALANT IS REQUIRED ON CUT EDGES OF TPO REINFORCED MEMBRANE.

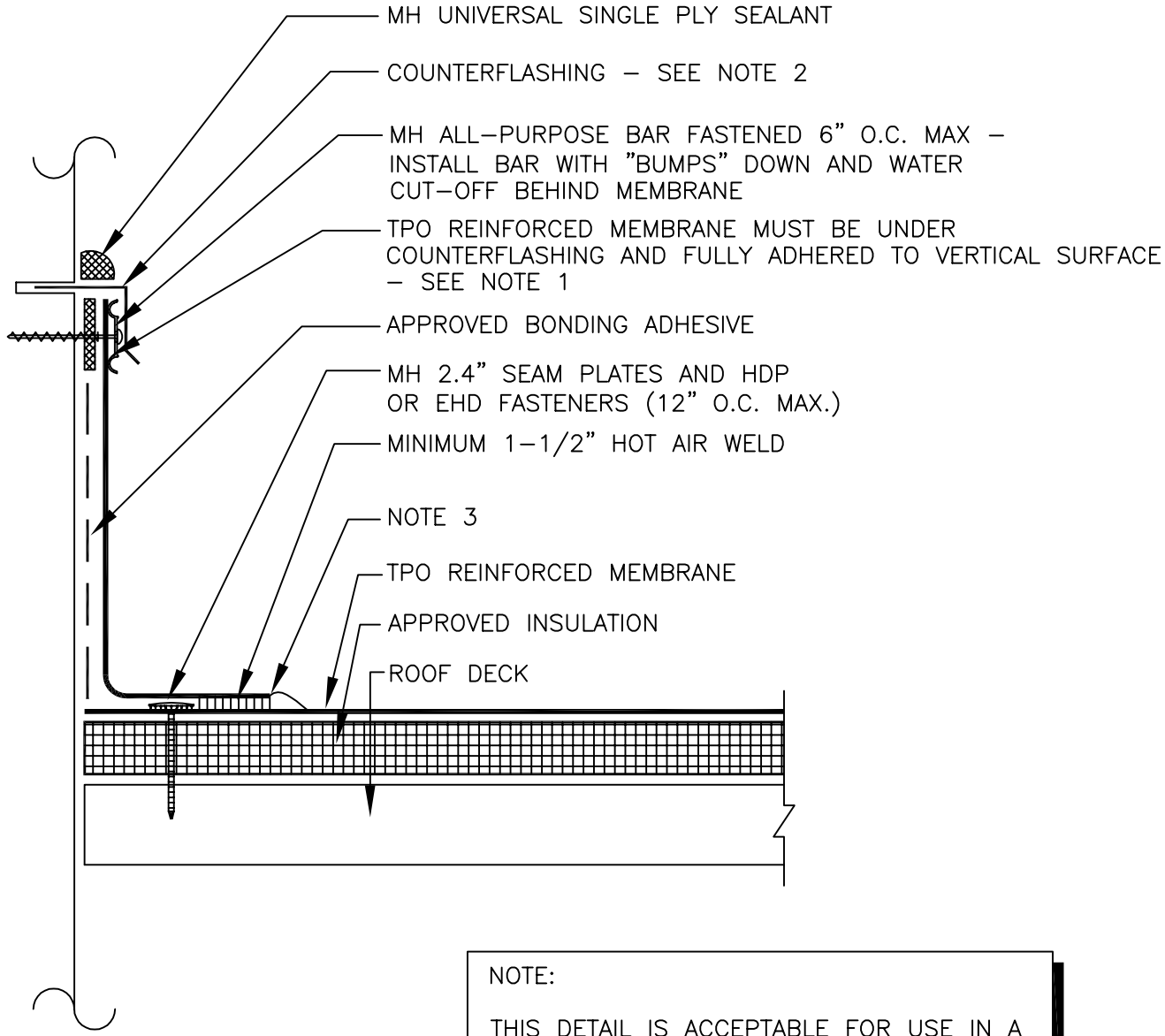

NOTE:

IF SHEETMETAL IS TO BE INCLUDED IN THE WARRANTY, CONTRACTOR MUST USE MULE-HIDE METAL PRODUCTS. REFER TO DETAILS MHSM-6130, MHSM-6145, OR MHSM-6146.

NOTE:

THIS DETAIL IS ACCEPTABLE FOR USE IN A 20-YEAR WARRANTED SYSTEM

MULE-HIDE PRODUCTS CO., INC.	**WALL FLASHING WITH COUNTERFLASHING** **SYSTEMS:** **ALL TPO SYSTEMS**	**DETAIL NO.:** **MHT-UN-310** REVISION DATE: 10/2013

®

NOTE:

THIS DETAIL IS NOT ACCEPTABLE FOR USE IN A 20–YEAR WARRANTED SYSTEM

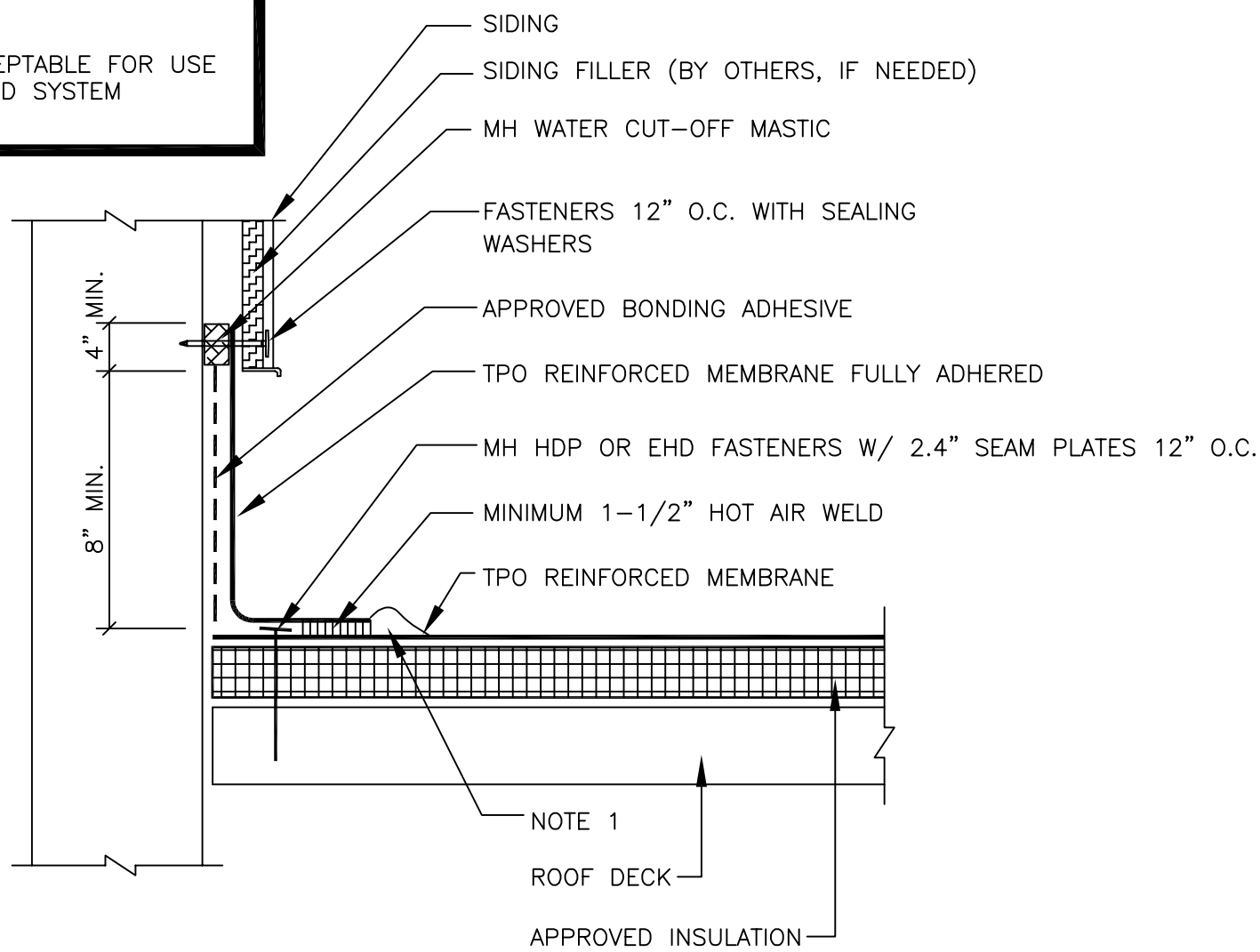

NOTES:

1. APPROXIMATELY $\frac{1}{8}$" DIAMETER BEAD OF CUT–EDGE SEALANT IS REQUIRED ON CUT EDGES OF TPO REINFORCED MEMBRANE.

MULE-HIDE PRODUCTS CO., INC.	**BASE FLASHING AT SIDING** **SYSTEMS:** **ALL TPO SYSTEMS**	**DETAIL NO.:** **MHT-UN-311** REVISION DATE: 10/2013

®

NOTES:

1. WHEN USING MULE-HIDE ALL-PURPOSE BAR TO TERMINATE WALL FLASHING, TPO BONDING ADHESIVE MAY BE ELIMINATED WHEN FLASHING HEIGHT IS 18" OR LESS.

2. FLASHING HEIGHT SHALL BE A MINIMUM OF 8" HIGH WHERE POSSIBLE. IF REMOVING COUNTERFLASHING DO NOT BLOCK OR COVER EXISTING WEEP HOLES. TERMINATION OF THE FLASHING MUST BE BELOW EXISTING WEEP HOLES.

3. ALL PURPOSE BAR FASTENED 6" ON CENTER IN 10' SECTIONS WITH ¼" GAP BETWEEN SECTIONS. ALL PURPOSE BAR IS TO BE INSTALLED WITH "BUMPS" FACING WALL. A FASTENER MUST BE LOCATED WITHIN 2" OF ENDS OF AP BAR. DO NOT BEND AP BAR AROUND INSIDE OR OUTSIDE CORNERS.

4. APPROXIMATELY 1/8" DIAMETER BEAD OF CUT-EDGE SEALANT IS REQUIRED ON CUT EDGES OF TPO REINFORCED MEMBRANE.

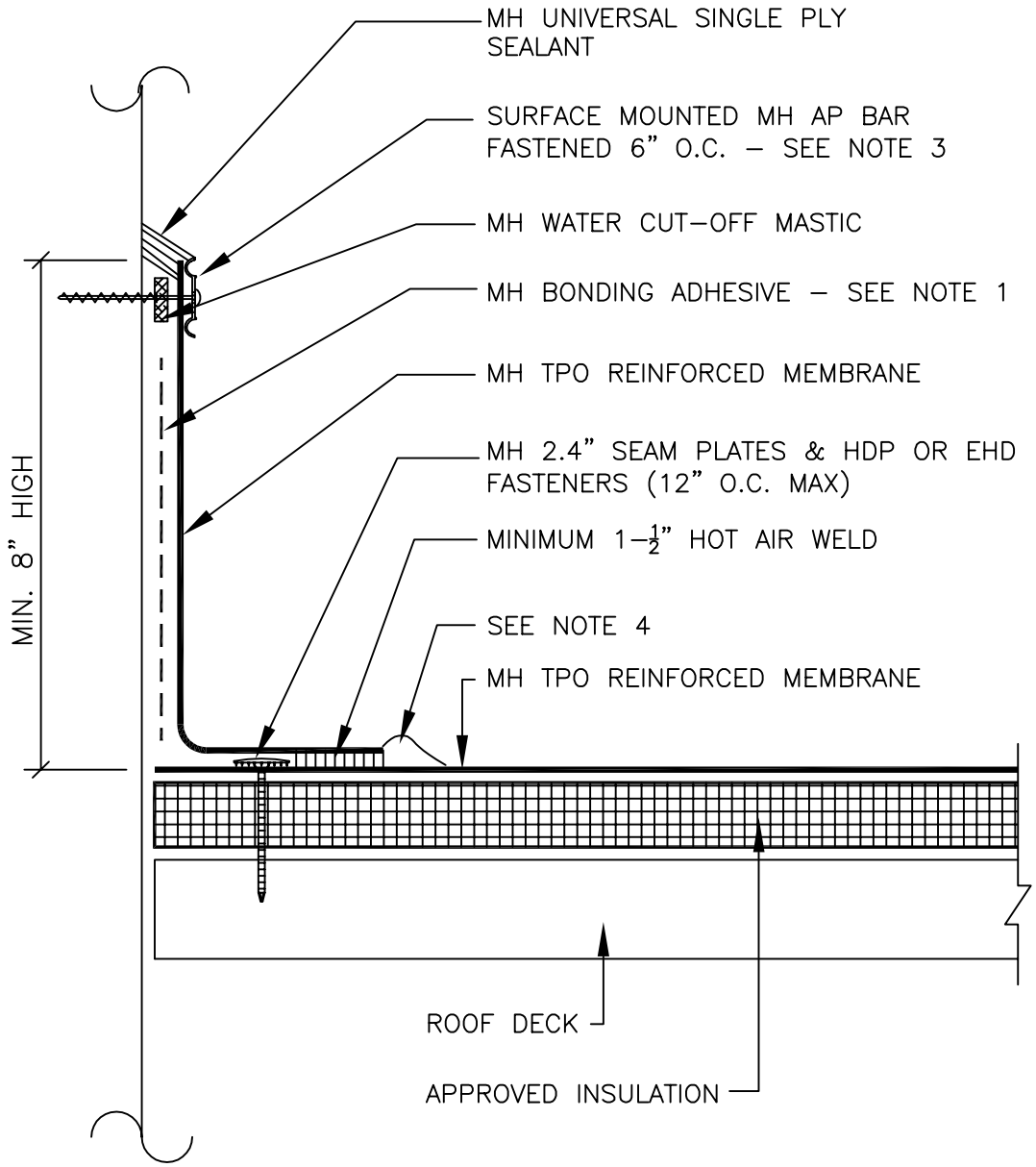

MULE-HIDE PRODUCTS CO., INC.	**WALL FLASHING WITH ALL-PURPOSE BAR** **SYSTEMS:** **ALL TPO SYSTEMS**	**DETAIL NO.:** **MHT-UN-312** REVISION DATE: 10/2013

®

NOTES:

1. POSITION SEAM PLATES 1/2" TO 1" FROM EDGE OF DECK MEMBRANE.

2. APPROXIMATELY 1/8" DIAMETER BEAD OF CUT-EDGE SEALANT IS REQUIRED ON CUT EDGES OF TPO REINFORCED MEMBRANE.

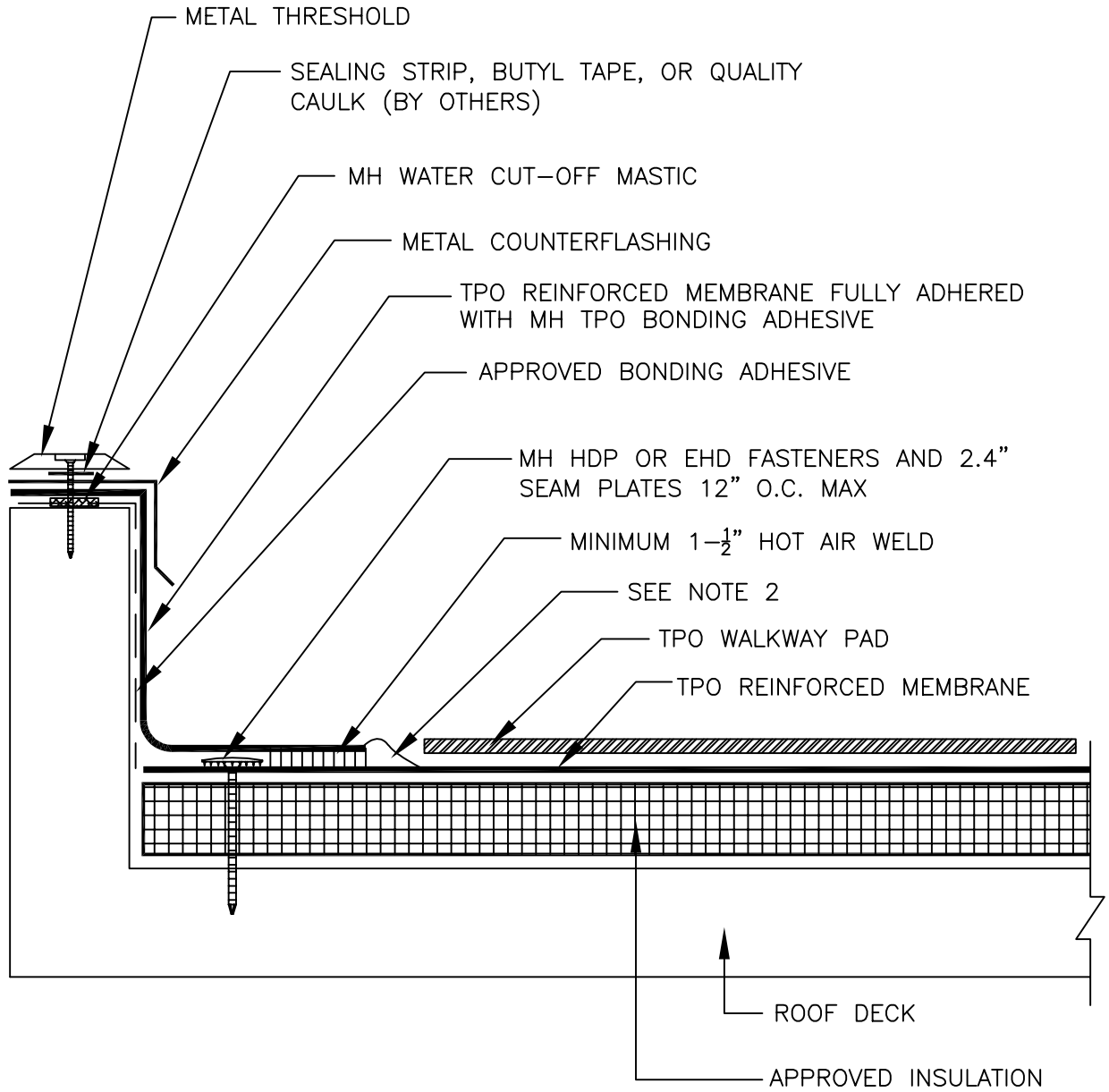

MULE-HIDE PRODUCTS CO., INC.	**DOOR THRESHOLD FLASHING**	**DETAIL NO.:**
	SYSTEMS:	**MHT-UN-321**
	ALL TPO SYSTEMS	REVISION DATE: 10/2013

®

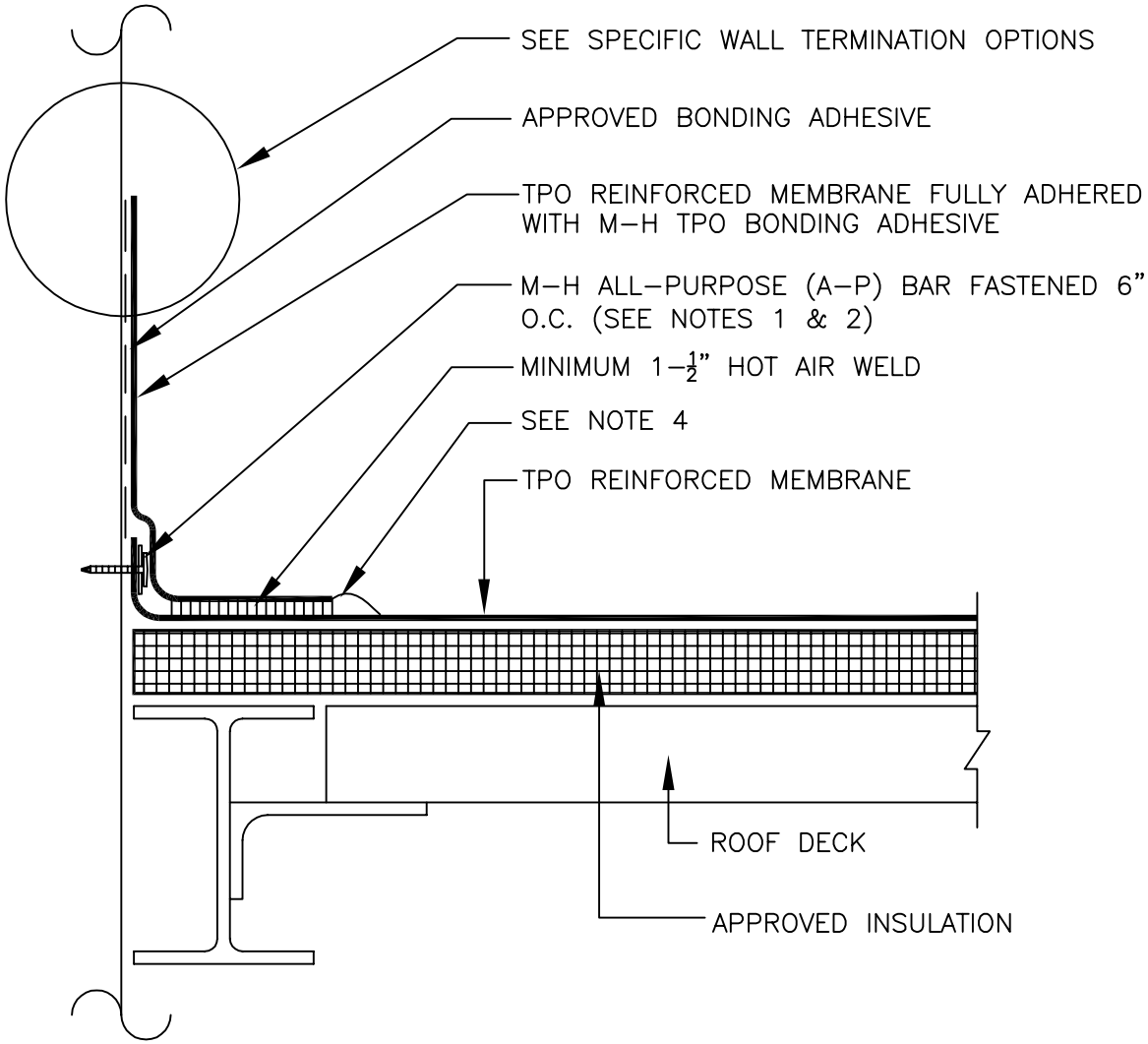

NOTES:

1. USE ONLY WHEN IT IS NOT POSSIBLE TO FASTEN HORIZONTALLY AT BASE OF PARAPET. M–H 2.4" SEAM PLATES MAY BE INSTALLED VERTICALLY AS AN OPTION TO USING THE ALL–PURPOSE BAR. PLATES MUST NOT EXCEED 12" O.C.

2. WHEN AP BAR IS USED IN LIEU OF 2.4" SEAM PLATES AND HDP OR EHD FASTENERS, THE "BUMPS" ARE INSTALLED UP.

3. WALL FASTENERS MUST ACHIEVE MINIMUM PULLOUT RESISTANCE OF 250 LBS.

4. APPROXIMATELY 1/8" DIAMETER BEAD OF CUT–EDGE SEALANT IS REQUIRED ON CUT EDGES OF TPO REINFORCED MEMBRANE.

MULE-HIDE PRODUCTS CO., INC.	**BASE ATTACHMENT ALL-PURPOSE BAR**	**DETAIL NO.:**
	SYSTEMS:	**MHT-UN-330**
	ALL TPO SYSTEMS	REVISION DATE: 10/2013

®

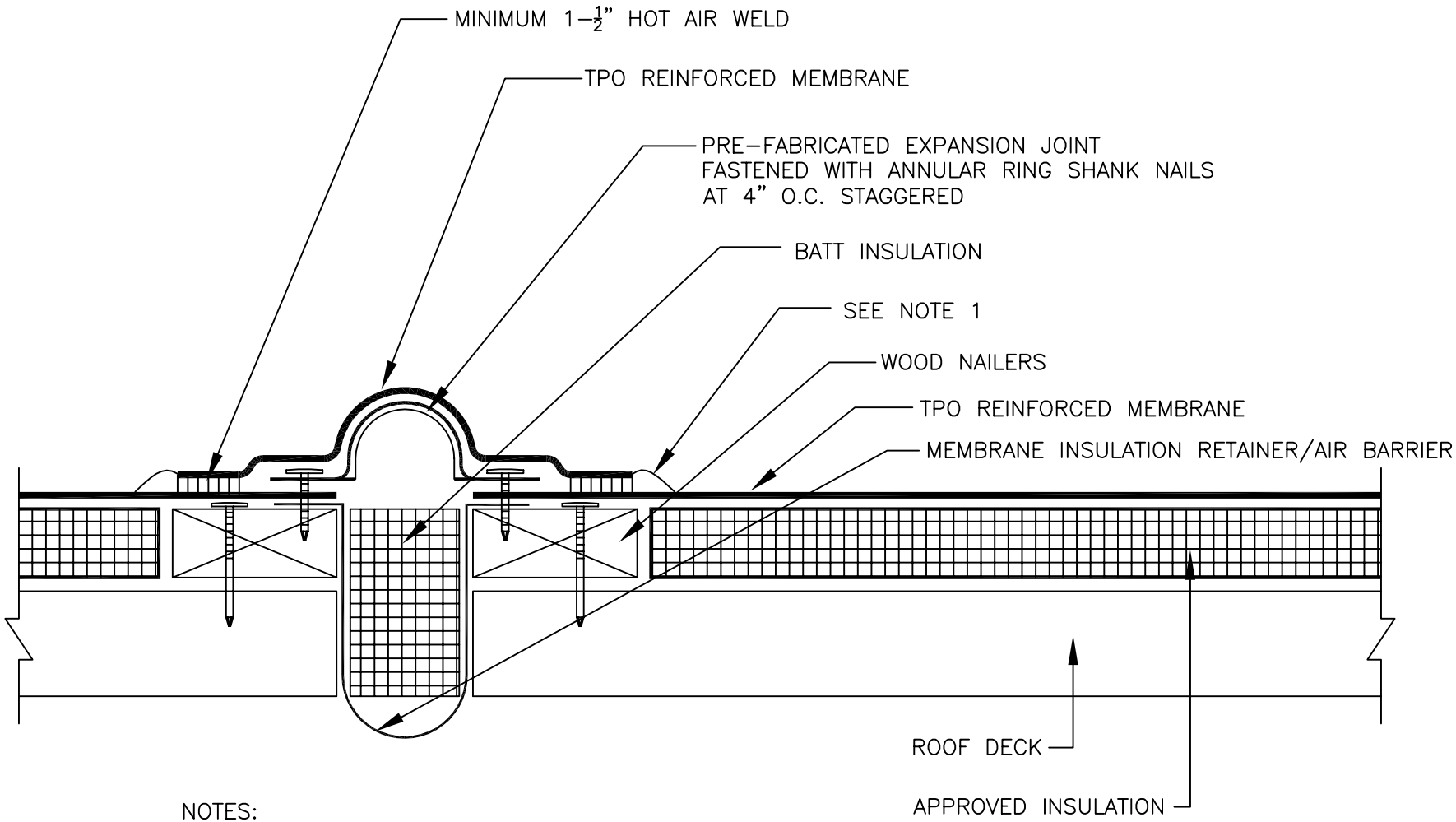

NOTES:

1. APPROXIMATELY 1/8" DIAMETER BEAD OF CUT–EDGE SEALANT IS REQUIRED ON CUT EDGES OF TPO REINFORCED MEMBRANE.

MULE-HIDE PRODUCTS CO., INC.	**EXPANSION JOINT DETAIL**	**DETAIL NO.:**
	SYSTEMS:	**MHT-UN-401**
	ALL TPO SYSTEMS	REVISION DATE: 10/2013

®

NOTES:

1. POSITION SEAM PLATES 1/2" TO 1" FROM EDGE OF DECK MEMBRANE.

2. APPROXIMATELY 1/8" DIAMETER BEAD OF CUT-EDGE SEALANT IS REQUIRED ON CUT EDGES OF TPO REINFORCED MEMBRANE.

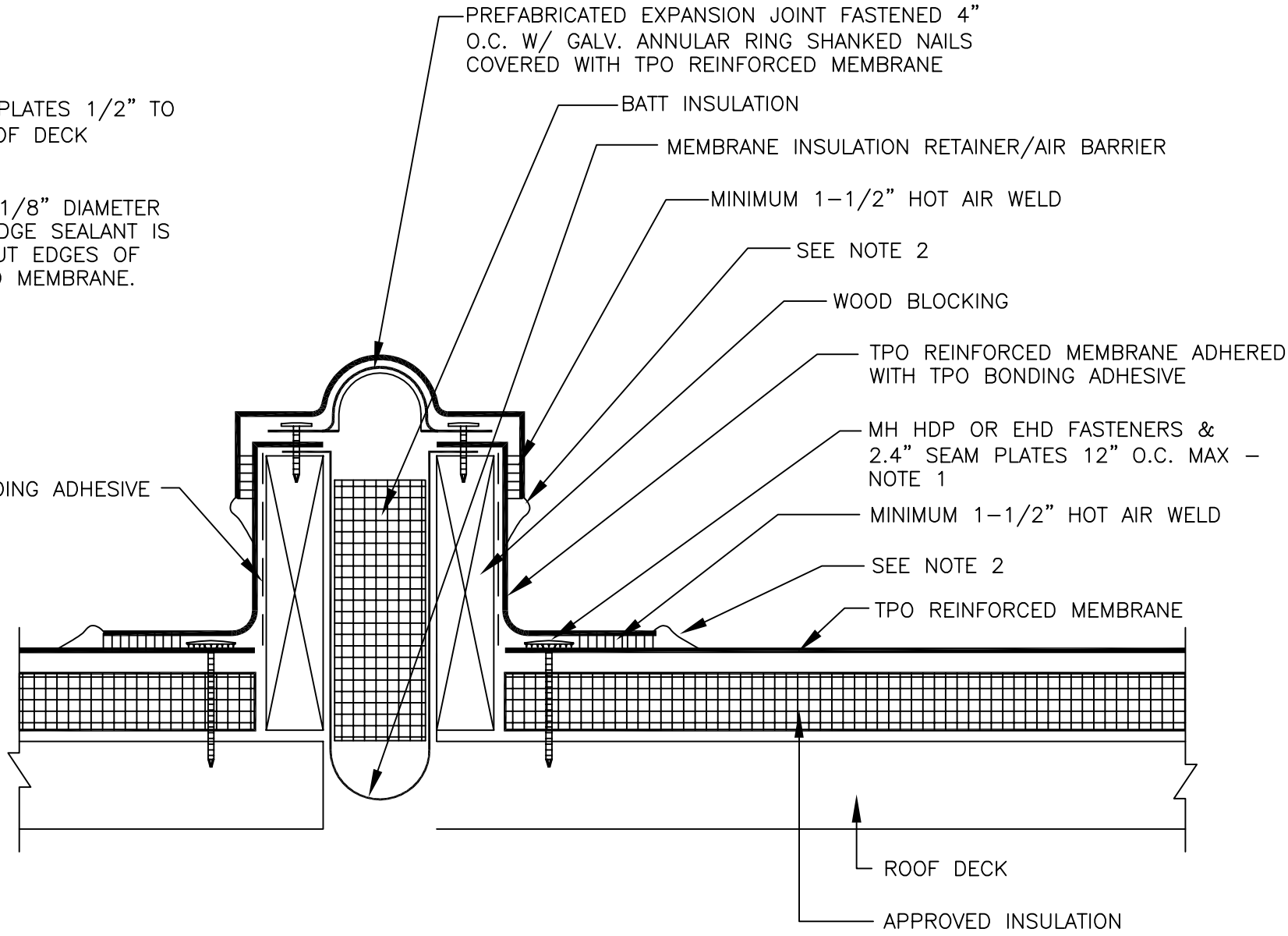

MULE-HIDE PRODUCTS CO., INC.	**EXPANSION JOINT CURB**	**DETAIL NO.:**
	SYSTEMS:	**MHT-UN-402**
	ALL TPO SYSTEMS	REVISION DATE: 10/2013

®

NOTES:

1. NAILERS SHALL BE SECURELY ANCHORED TO THE DECK AT A MAXIMUM SPACING OF 3 FEET TO RESIST A FORCE OF 175 LBS PER LINEAR FOOT IN ANY DIRECTION.

2. APPROXIMATELY 1/8" DIAMETER BEAD OF CUT-EDGE SEALANT IS REQUIRED ON CUT EDGES OF TPO REINFORCED MEMBRANE.

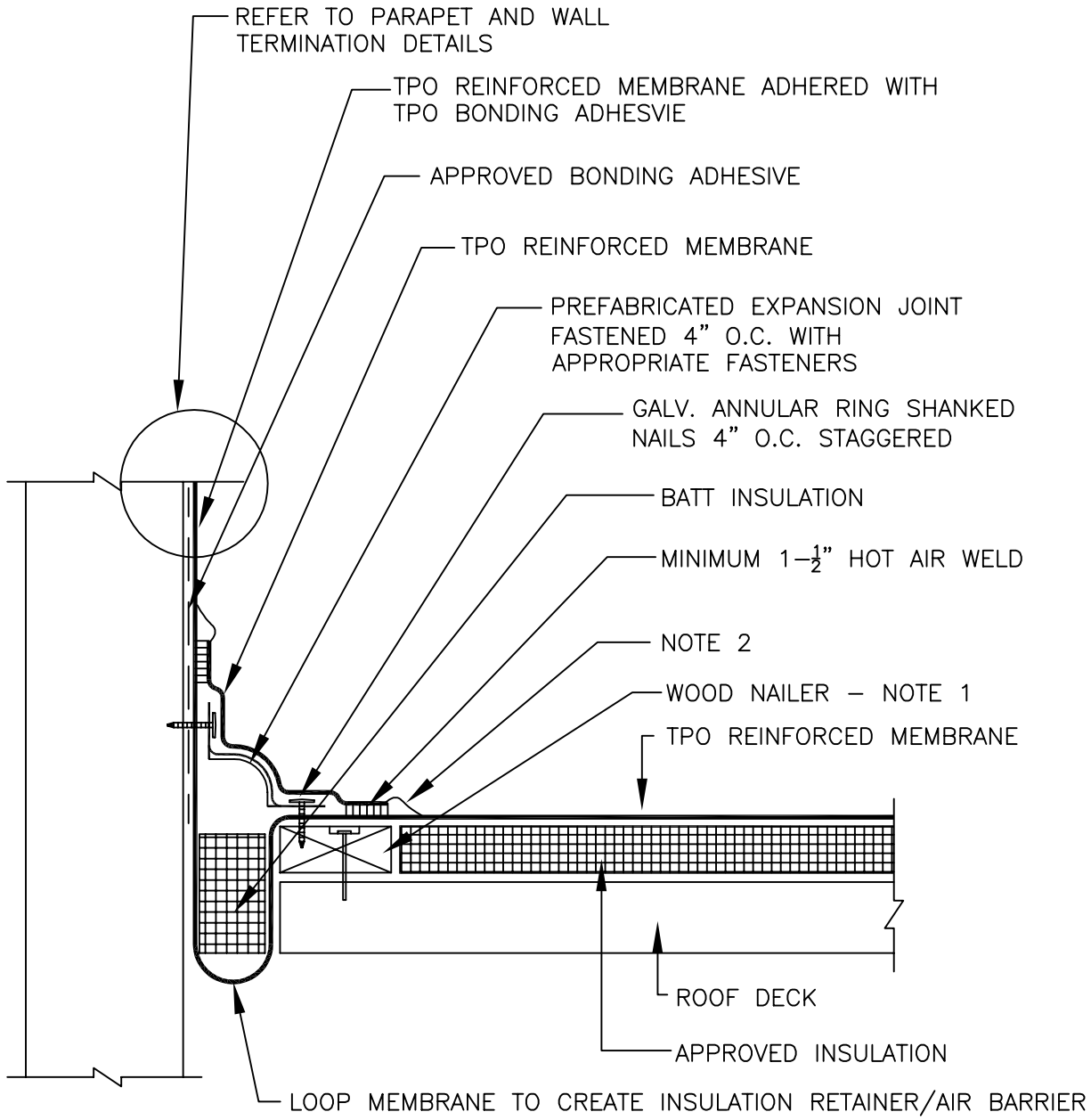

MULE-HIDE PRODUCTS CO., INC.	**WALL EXPANSION JOINT**	**DETAIL NO.:**
	SYSTEMS:	**MHT-UN-403**
	ALL TPO SYSTEMS	REVISION DATE: 10/2013

®

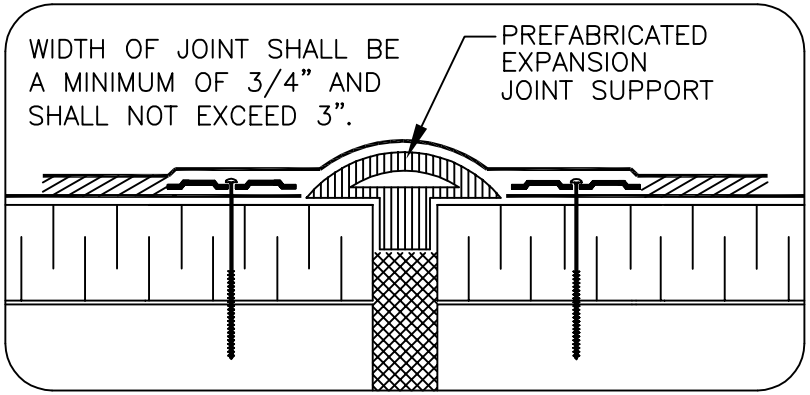

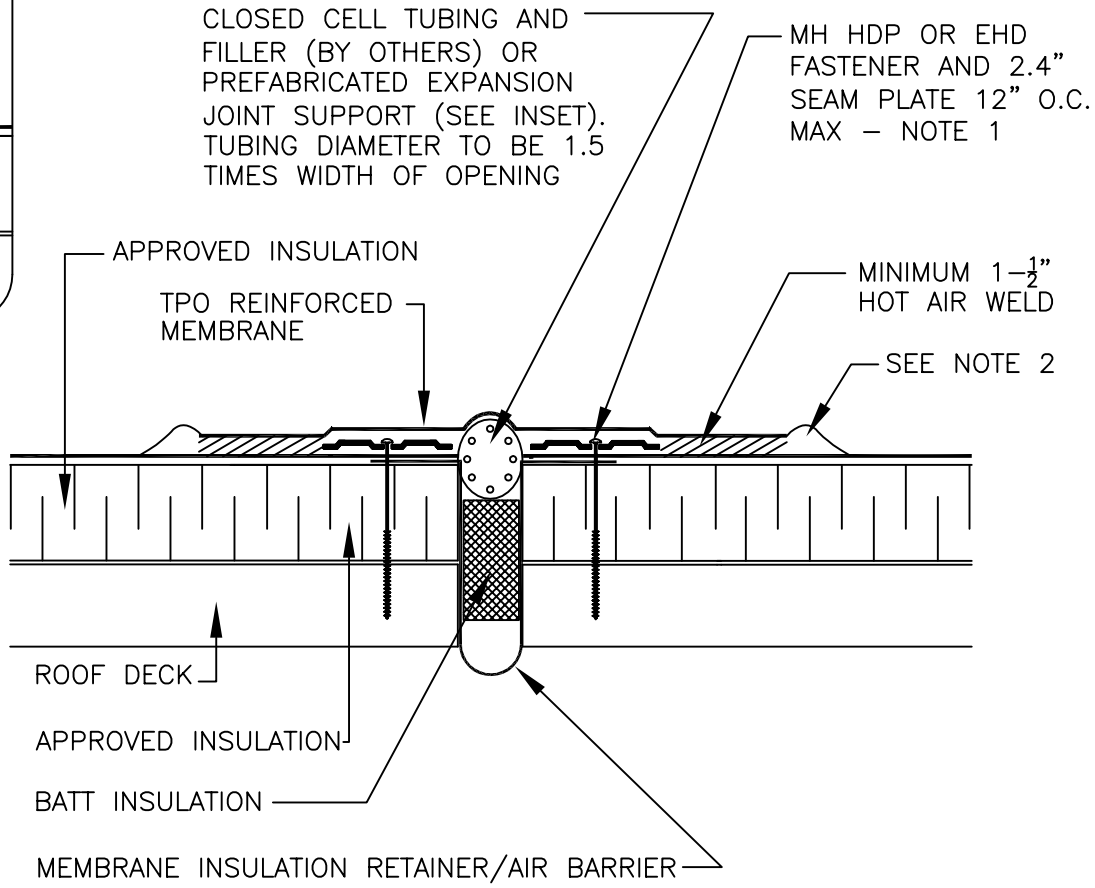

NOTES:

1. POSITION SEAM PLATES 1/2" MINIMUM TO 1" MAXIMUM FROM EDGE OF TPO DECK MEMBRANE.
2. APPROXIMATELY 1/8" DIAMETER BEAD OF CUT–EDGE SEALANT IS REQUIRED ON CUT EDGES OF TPO REINFORCED MEMBRANE.
3. MULE–HIDE RECOMMENDS THE USE OF CARLISLE PREFABRICATED EXPANSION JOINT SUPPORTS.

MULE-HIDE PRODUCTS CO., INC.	**EXPANSION JOINT DETAILS**	**DETAIL NO.:**
	SYSTEMS:	**MHT-UN-404A**
	ALL TPO SYSTEMS	REVISION DATE: 10/2013

®

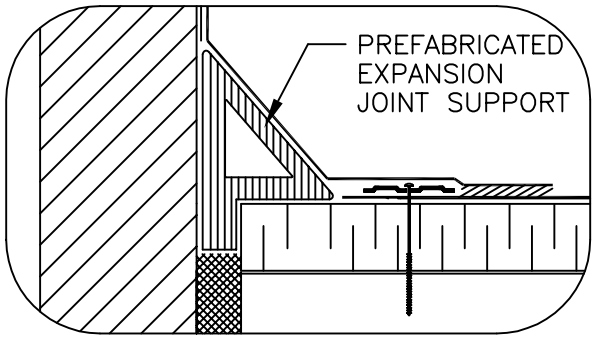

WIDTH OF JOINT SHALL BE A MINIMUM OF 3/4" AND SHALL NOT EXCEED 2".

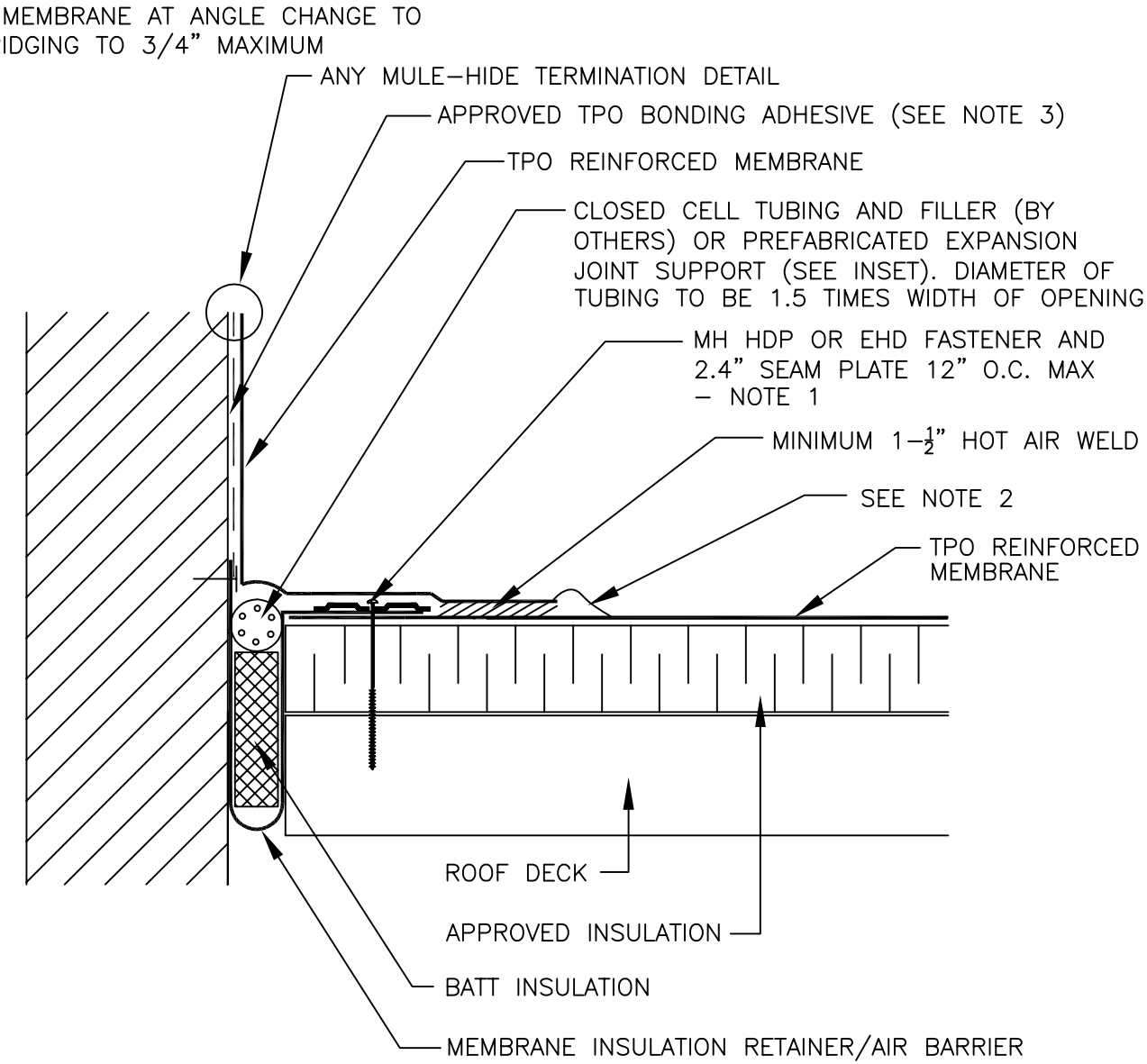

NOTES:

1. POSITION FASTENING PLATES 1/2" MINIMUM TO 1" MAXIMUM FROM EDGE OF DECK MEMBRANE.
2. APPROXIMATELY 1/8" DIAMETER BEAD OF EDGE SEALANT IS REQUIRED ON CUT EDGES OF TPO REINFORCED MEMBRANE.
3. TPO BONDING ADHESIVE IS REQUIRED REGARDLESS OF TERMINATION HEIGHT.
4. MULE–HIDE RECOMMENDS THE USE OF CARLISLE'S PREFABRICATED EXPANSION JOINT SUPPORT AS AN OPTION FOR THIS DETAIL.

MULE-HIDE PRODUCTS CO., INC.	**WALL EXPANSION JOINT**	**DETAIL NO.:**
	SYSTEMS:	**MHT-UN-404B**
	ALL TPO SYSTEMS	REVISION DATE: 10/2013

®

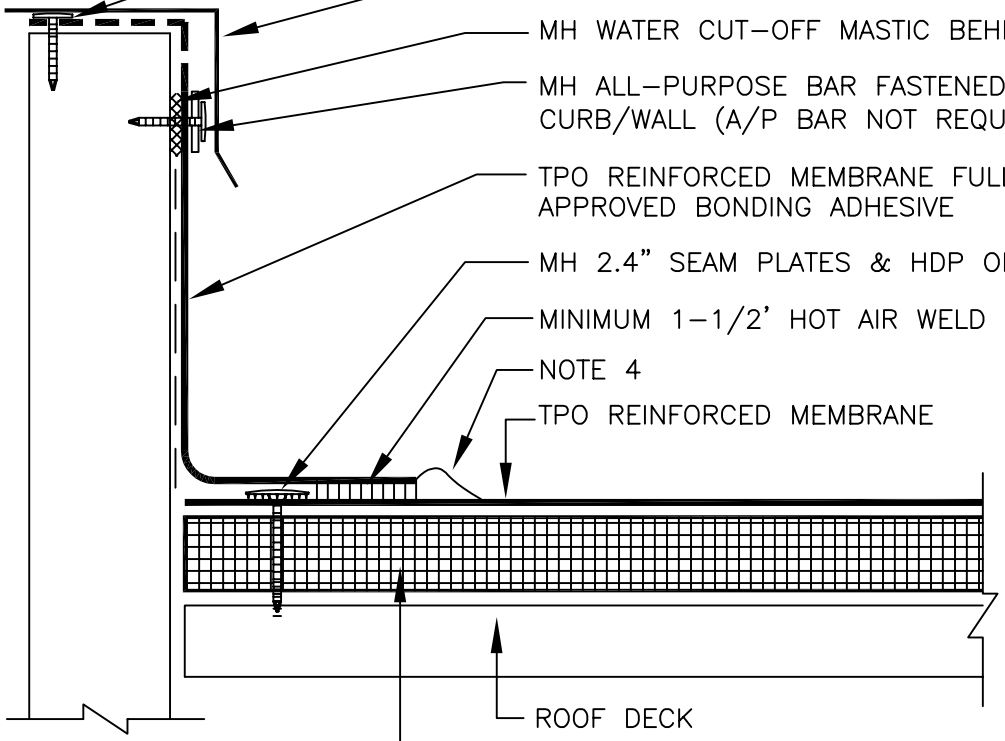

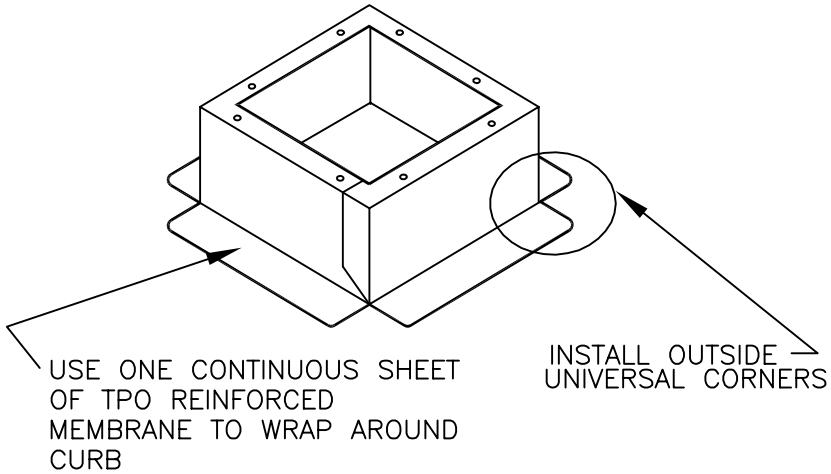

NOTES:

1. ALL FLASHING MUST BE A MINIMUM OF 8" HIGH WHERE POSSIBLE
2. DO NOT COVER WEEP HOLES OR THRU–WALL COUNTERFLASHINGS
3. WHEN THE M–H ALL–PURPOSE BAR IS USED UNDER THE COUNTERFLASHING OR THE MEMBRANE IS NAILED TO THE HORIZONTAL TOP OF THE CURB, TPO BONDING ADHESIVE MAY BE ELIMINATED WHEN FLASHING HEIGHT IS 18" OR LESS.
4. APPROXIMATELY 1/8" DIAMETER BEAD OF CUT–EDGE SEALANT IS REQUIRED ON CUT EDGES OF TPO REINFORCED MEMBRANE.

NOTE:

THIS DETAIL IS ACCEPTABLE FOR USE IN A 20–YEAR WARRANTED SYSTEM

MULE-HIDE PRODUCTS CO., INC.	**CURB / WALL FLASHING WITH M-H ALL-PURPOSE BAR** **SYSTEMS:** **ALL TPO SYSTEMS**	**DETAIL NO.:** **MHT-UN-502** REVISION DATE: 10/2013

®

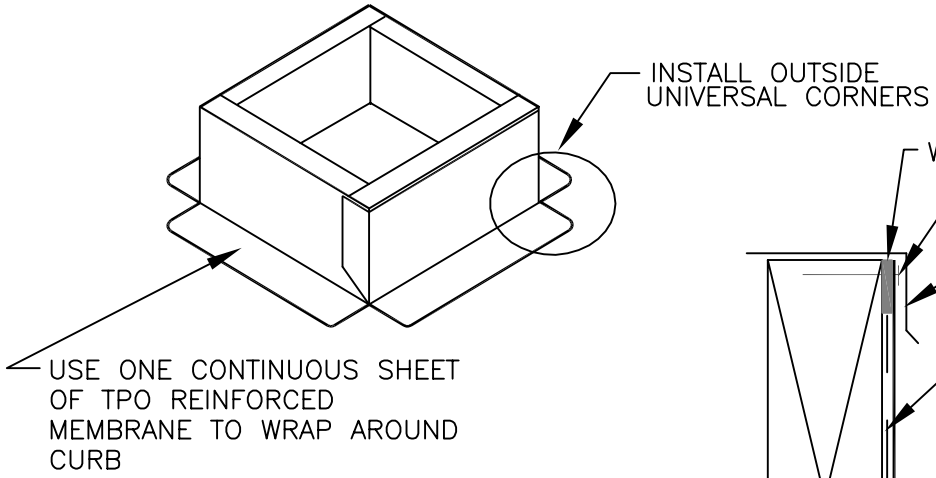

CREASE MEMBRANE AT ANGLE CHANGE TO LIMIT BRIDGING TO 3/4" MAXIMUM

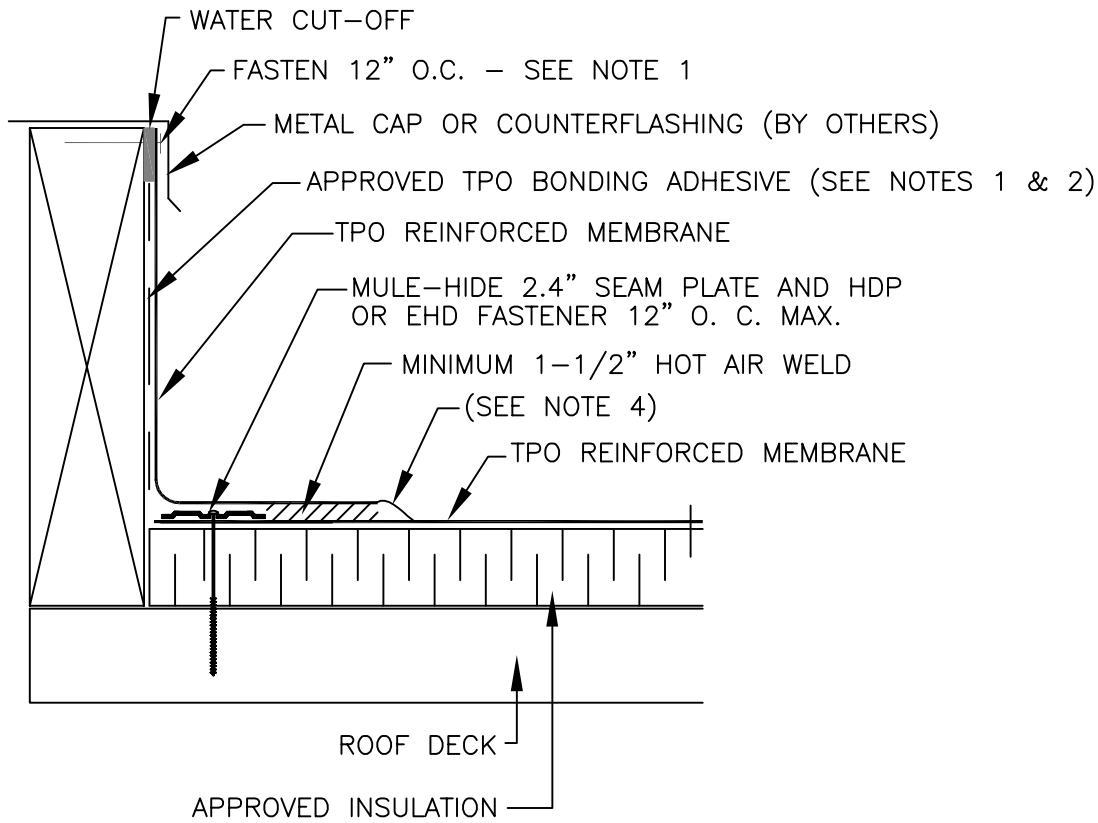

NOTES:

1. TPO REINFORCED MEMBRANE FASTENED APPROXIMATELY 12" ON CENTER. IF FASTENER PENETRATES METAL COUNTERFLASHING, USE NEOPRENE WASHER OR APPLY WATER CUT-OFF MASTIC UNDER COUNTERFLASHING OR CAULK FASTENER HEAD.

2. APPROXIMATELY 1/8" BEAD OF CUT-EDGE SEALANT IS REQUIRED ON CUT EDGES OF TPO REINFORCED MEMBRANE.

NOTE:

THIS DETAIL IS NOT ACCEPTABLE FOR USE IN A 20-YEAR WARRANTED SYSTEM.

MULE-HIDE PRODUCTS CO., INC.	**CURB FLASHING**	**DETAIL NO.:**
	SYSTEMS:	**MHT-UN-503**
	ALL TPO SYSTEMS	REVISION DATE: 10/2013

®

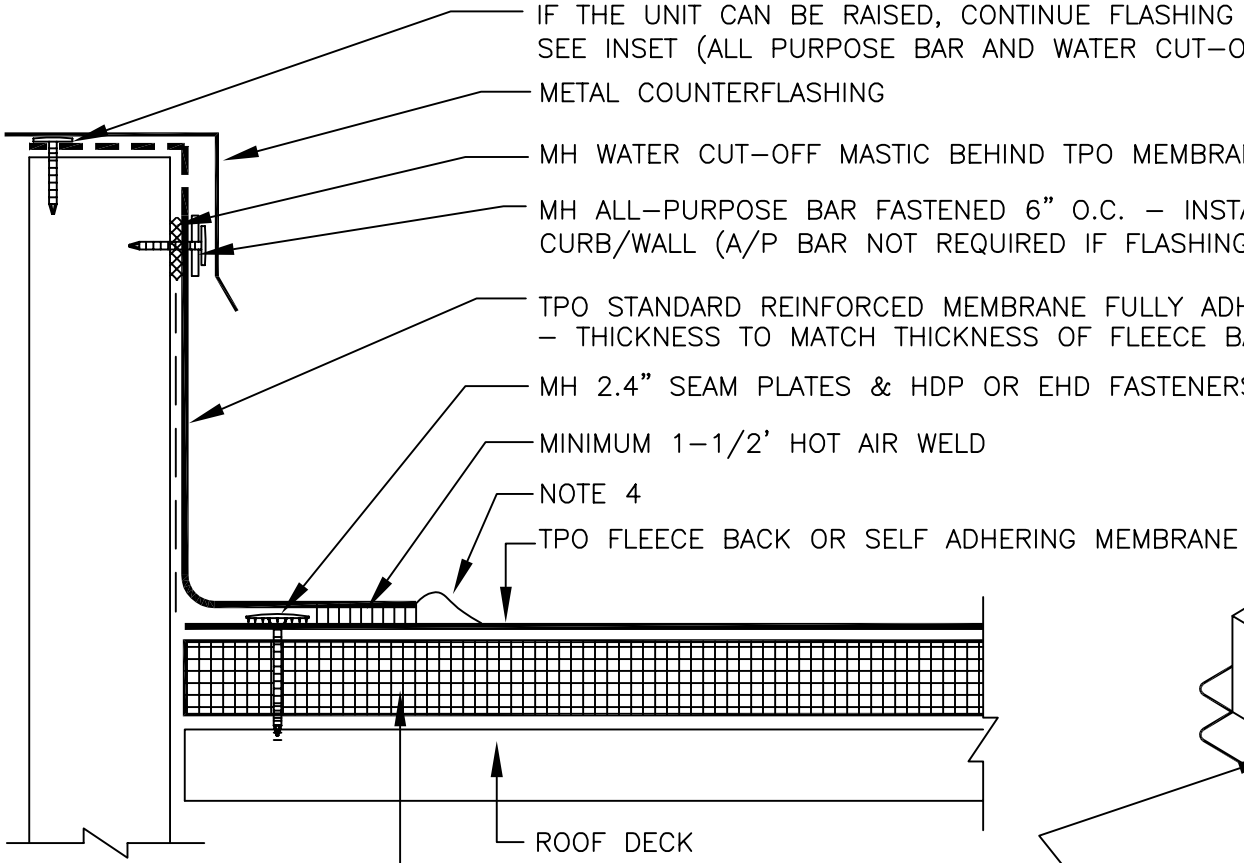

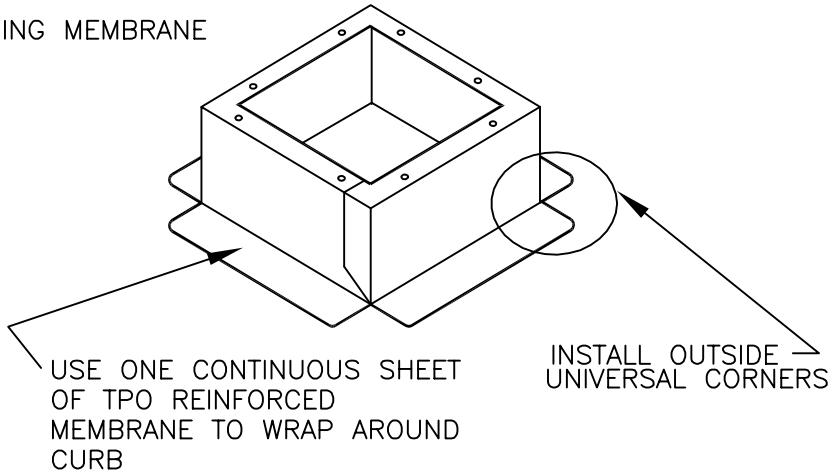

NOTES:

1. ALL FLASHING MUST BE A MINIMUM OF 8" HIGH WHERE POSSIBLE
2. DO NOT COVER WEEP HOLES OR THRU–WALL COUNTERFLASHINGS
3. WHEN THE M–H ALL–PURPOSE BAR IS USED UNDER THE COUNTERFLASHING OR THE MEMBRANE IS NAILED TO THE HORIZONTAL TOP OF THE CURB, TPO BONDING ADHESIVE MAY BE ELIMINATED WHEN FLASHING HEIGHT IS 18" OR LESS.
4. APPROXIMATELY 1/8" DIAMETER BEAD OF CUT–EDGE SEALANT IS REQUIRED ON CUT EDGES OF TPO REINFORCED MEMBRANE.

NOTE:

THIS DETAIL IS ACCEPTABLE FOR USE IN A 20–YEAR WARRANTED SYSTEM

MULE-HIDE PRODUCTS CO., INC.	**CURB / WALL FLASHING WITH M-H ALL-PURPOSE BAR** **SYSTEMS:** **ALL TPO FLEECE BACK & SELF ADHERING**	**DETAIL NO.:** **MHT-UN-503A** REVISION DATE: 10/2013

®

FOR DRAINS WITH TAPERED INSULATION AT DRAIN SUMP LESS THAN 3 INCHES TO 12

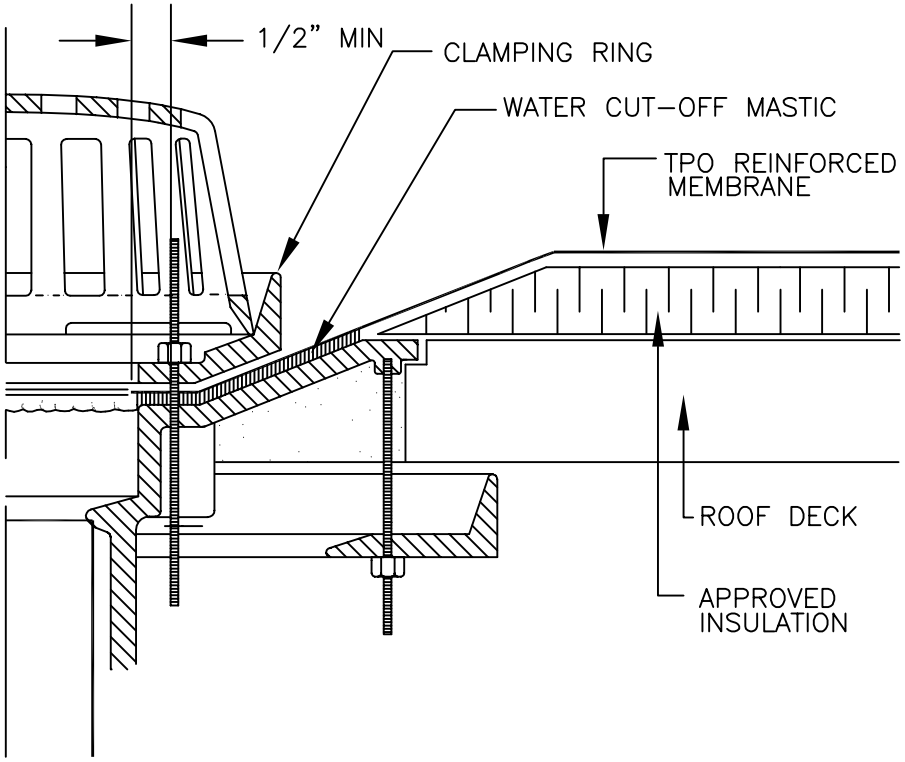

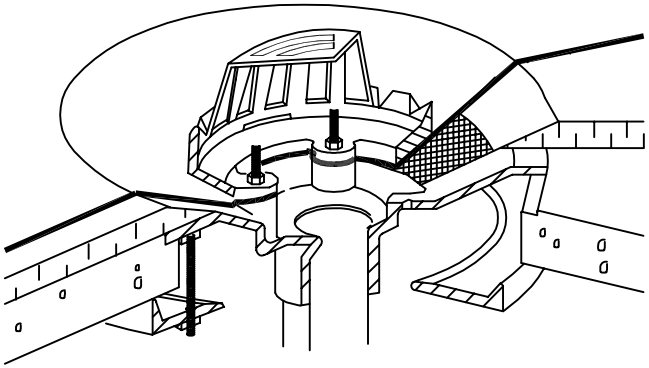

NOTES:

1. REMOVE ALL LEAD AND OTHER FLASHING.
2. ALL BOLTS AND CLAMPS MUST BE IN PLACE TO PROVIDE CONSTANT COMPRESSION ON WATER CUT-OFF MASTIC.
3. CUT THE MEMBRANE SO IT EXTENDS A MINIMUM OF 1/2" FROM THE ATTACHMENT POINTS OF THE DRAIN CLAMPING RING.
4. FOR DRAIN SUMPS WITH SLOPES GREATER THAN 3" IN 12" REFER TO DETAIL MHT-UN-511A.
5. DO NOT LOCATE FIELD SEAM WITHIN THE DRAIN OR DRAIN SUMP. IF FIELD SEAM OCCURs IN DRAIN OR DRAIN SUMP, A TARGET PATCH MUST BE INSTALLED. SEE APPROPRIATE TARGET PATCH DETAIL.

MULE-HIDE PRODUCTS CO., INC.	**DRAIN FLASHING - TAPERED INSULATION DRAIN SUMP SLOPE LESS THAN 3" TO 1"**	**DETAIL NO.:**
	SYSTEMS:	**MHT-UN-510A**
	ALL TPO SYSTEMS	REVISION DATE: 10/2013

®

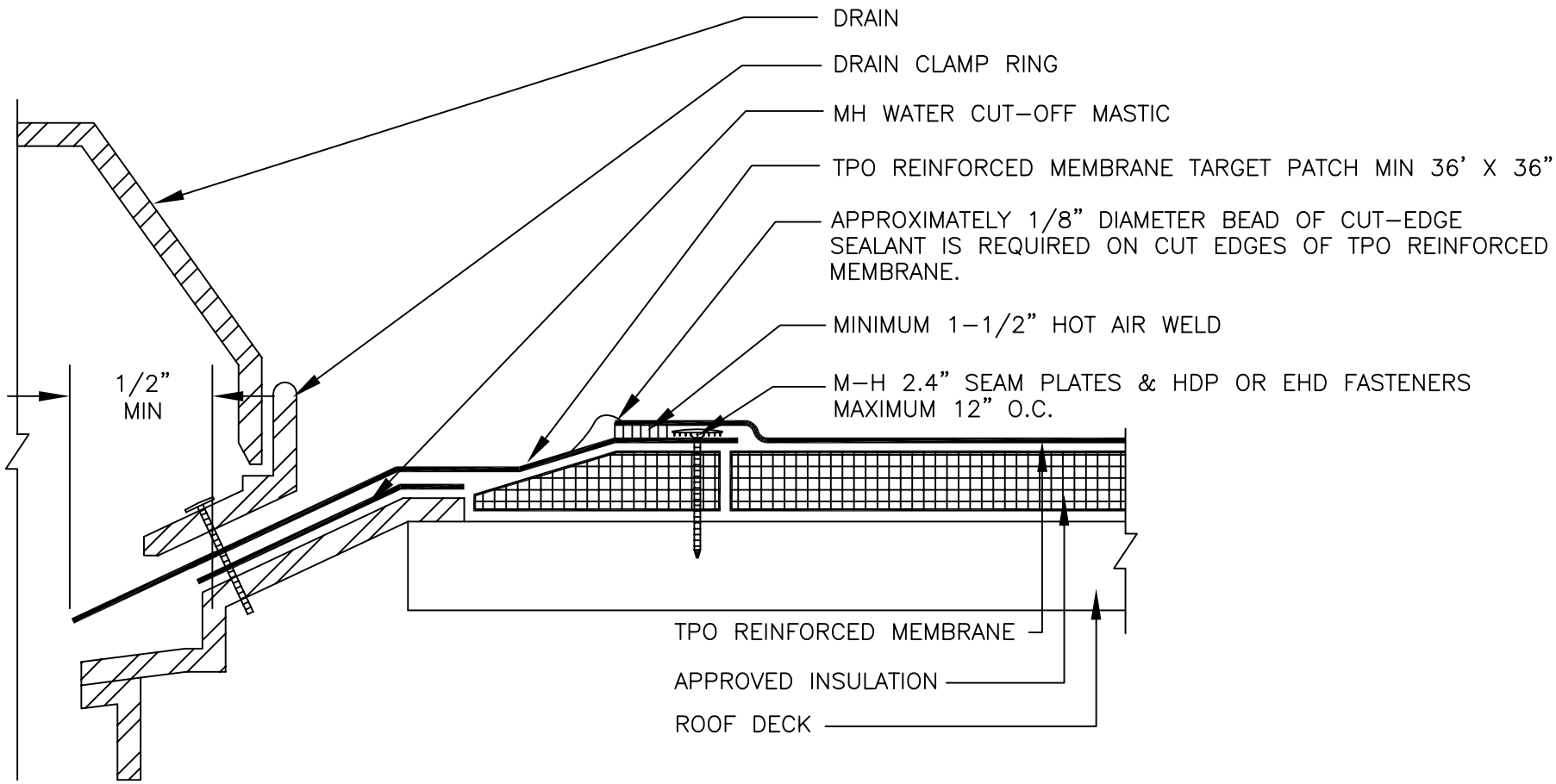

NOTES:

1. REMOVE ALL LEAD AND OTHER FLASHING.
2. ALL BOLTS AND CLAMPS MUST BE IN PLACE TO PROVIDE CONSTANT COMPRESSION ON WATER CUT–OFF MASTIC.
3. CUT THE MEMBRANE SO IT EXTENDS A MINIMUM OF 1/2" FROM THE ATTACHMENT POINTS OF THE DRAIN CLAMPING RING.
4. FOR DRAIN SUMPS WITH SLOPES GREATER THAN 3" IN 12" REFER TO DETAIL MHT–UN–511A.
5. THIS TWO PIECE DESIGN MUST BE USED WHEN A FIELD SEAM PASSES THROUGH THE DRAIN AREA.

MULE-HIDE PRODUCTS CO., INC.	**DRAIN FLASHING WITH TARGET PATCH** **SYSTEMS:** **MECHANICALLY ATTACHED**	**DETAIL NO.:** **MHT-MA-510B** REVISION DATE: 10/2013

®

NOTES:

1. CUT THE MEMBRANE SO IT EXTENDS A MINIMUM OF 1/2" FROM THE ATTACHMENT POINTS OF THE DRAIN CLAMPING RING.

2. THE CLAMPING RING BOLT MUST PENETRATE THE MEMBRANE.

3. ALL FLASHINGS ON A TPO FLEECEBACK PROJECT MUST BE CONSTRUCTED WITH STANDARD REINFORCED TPO MEMBRANE.

4. APPROXIMATELY 1/8" BEAD OF CUT-EDGE SEALANT IS REQUIRED ON CUT EDGES OF TPO REINFORCED MEMBRANE.

5. THICKNESS OF STANDARD TPO MEMBRANE TO MATCH THICKNESS OF FLEECEBACK TPO MEMBRANE.

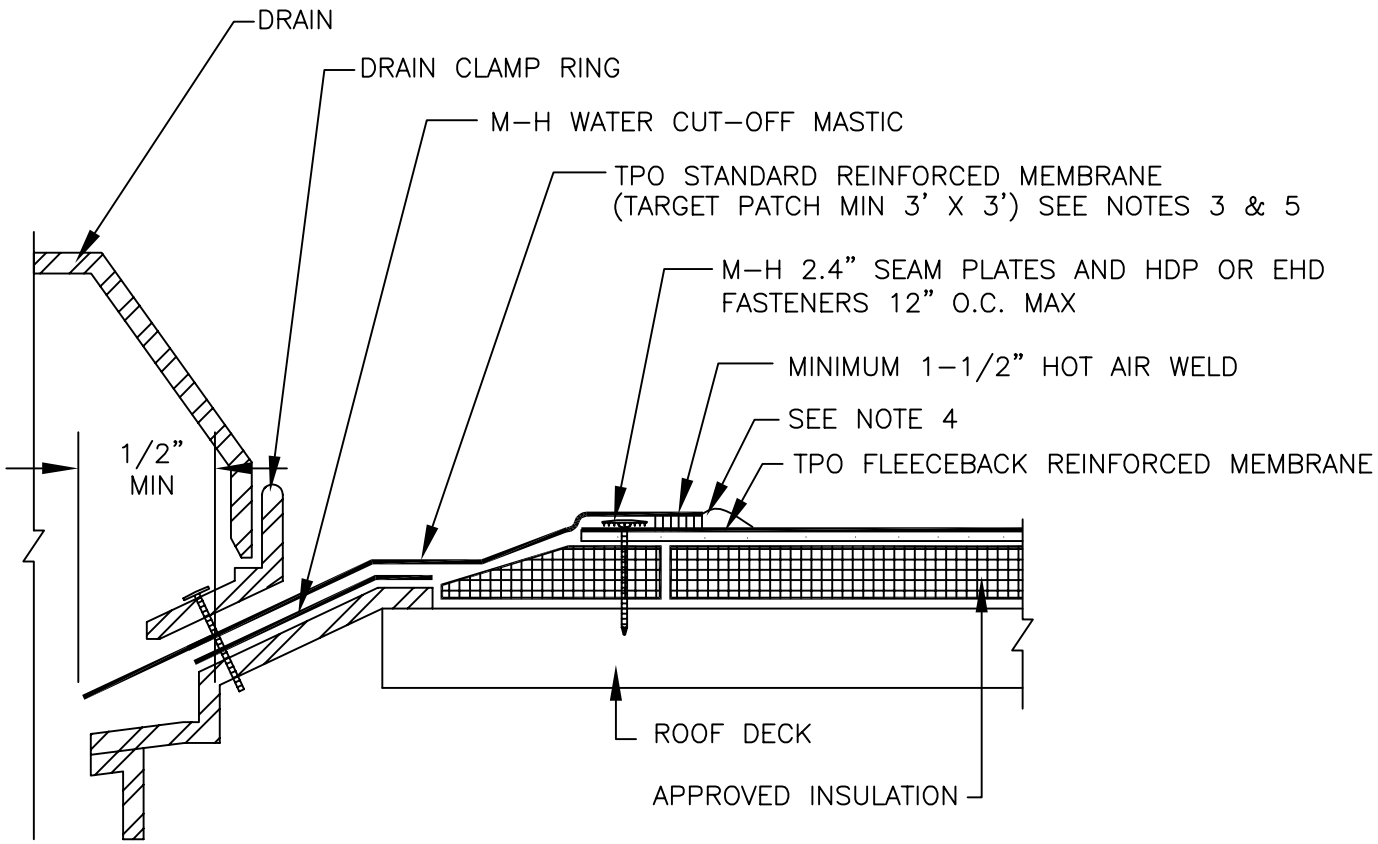

MULE-HIDE PRODUCTS CO., INC.	**DRAIN FLASHING WITH TARGET** **SYSTEMS: MECHANICALLY ATTACHED TPO FLEECE BACK**	**DETAIL NO.:** **MHT-MA-510C** REVISION DATE: 10/2013

®

NOTES:

1. CUT THE MEMBRANE SO IT EXTENDS A MINIMUM OF 1/2" FROM THE ATTACHMENT POINTS OF THE DRAIN CLAMPING RING.

2. THE CLAMPING RING BOLT MUST PENETRATE THE MEMBRANE.

3. ALL FLASHINGS ON A TPO FLEECEBACK OR SELF ADHERING PROJECT MUST BE CONSTRUCTED WITH STANDARD REINFORCED TPO MEMBRANE.

4. APPROXIMATELY 1/8" BEAD OF CUT-EDGE SEALANT IS REQUIRED ON CUT EDGES OF TPO REINFORCED MEMBRANE.

5. THICKNESS OF STANDARD TPO MEMBRANE TO MATCH THICKNESS OF FLEECEBACK TPO OR SELF ADHERING MEMBRANE.

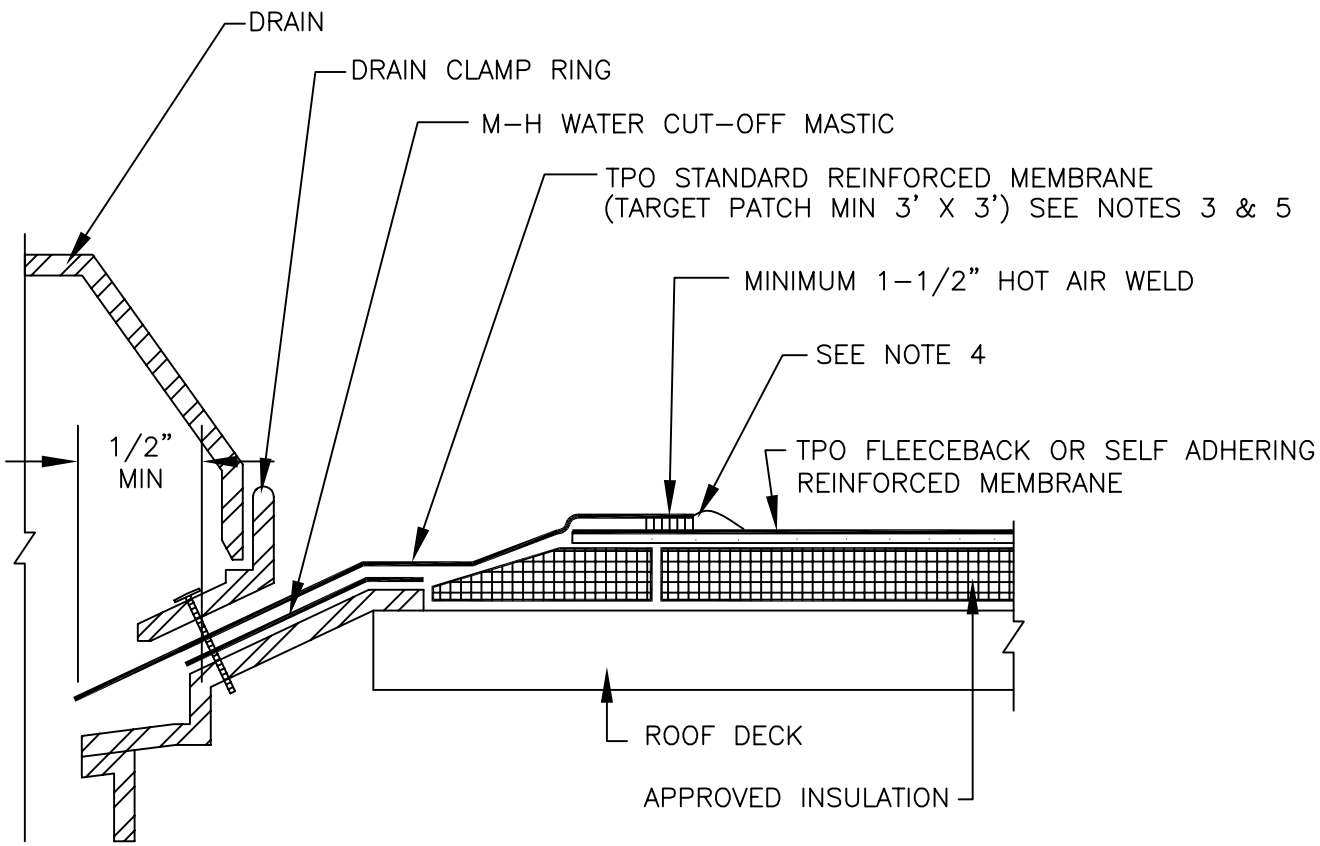

MULE-HIDE PRODUCTS CO., INC.	**DRAIN FLASHING WITH TARGET** **SYSTEMS: FULLY ADHERED TPO FLEECE BACK & SELF ADHERING**	**DETAIL NO.:** **MHT-FA-510D** REVISION DATE: 10/2013

®

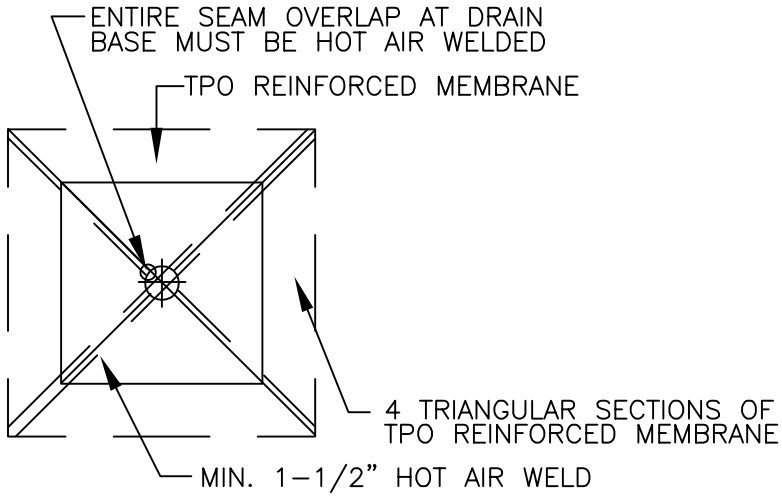

FOR DRAINS WITH TAPERED INSULATION AT DRAIN SUMP GREATER THAN 3" TO 12"

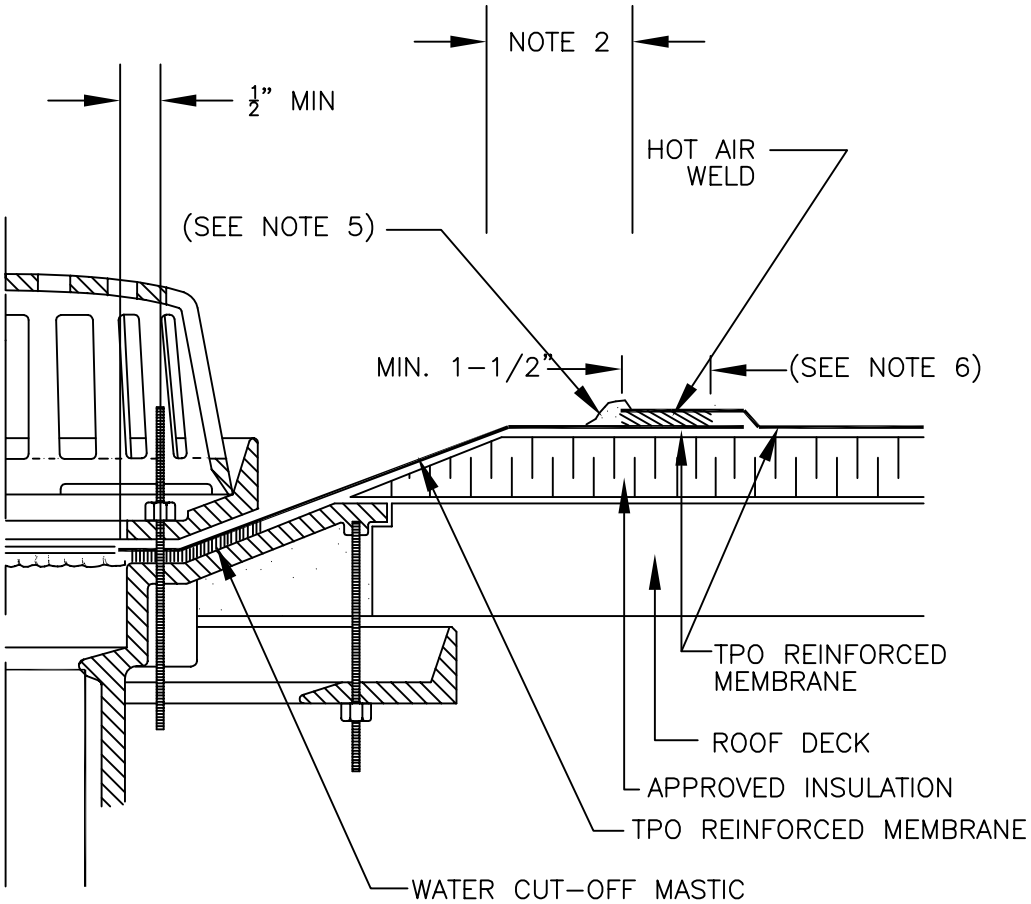

NOTES:

1. REMOVE ALL LEAD AND OTHER FLASHING.
2. EXTEND THE TPO REINFORCED MEMBRANE APPROXIMATELY 5–1/2" OUT OF THE SUMP AREA.
3. ALL BOLTS OR CLAMPS MUST BE IN PLACE TO PROVIDE COMPRESSION ON WATER CUT–OFF MASTIC.
4. CUT THE MEMBRANE SO IT EXTENDS A MINIMUM OF 1/2" FROM THE ATTACHMENT POINTS OF THE DRAIN CLAMPING RING.
5. APPROXIMATELY 1/8" DIAMETER BEAD OF CUT–EDGE SEALANT IS REQUIRED ON CUT EDGE OF TPO REINFORCED MEMBRANE.
6. MECHANICALLY ATTACHED SYSTEMS WILL REQUIRE HDP OR EHD FASTENERS AND 2.4" SEAM PLATES (12" O.C. MAX.) INSTALLED IN TARGET PANELS WITH FIELD SHEET OVERLAPPED AND HOT AIR WELDED (REFER TO DETAIL MHT–MA–510B).

MULE-HIDE PRODUCTS CO., INC.	**DRAIN FLASHING WITH TARGET PANELS DRAIN SUMP SLOPE GREATER THAN 3" TO 12"**	**DETAIL NO.:**
	SYSTEMS:	**MHT-UN-511A**
	ALL TPO SYSTEMS	REVISION DATE: 10/2013

®

FOR DRAINS WITH TAPERED INSULATION AT DRAIN SUMP GREATER THAN 3" TO 1 HORIZONTAL FOOT

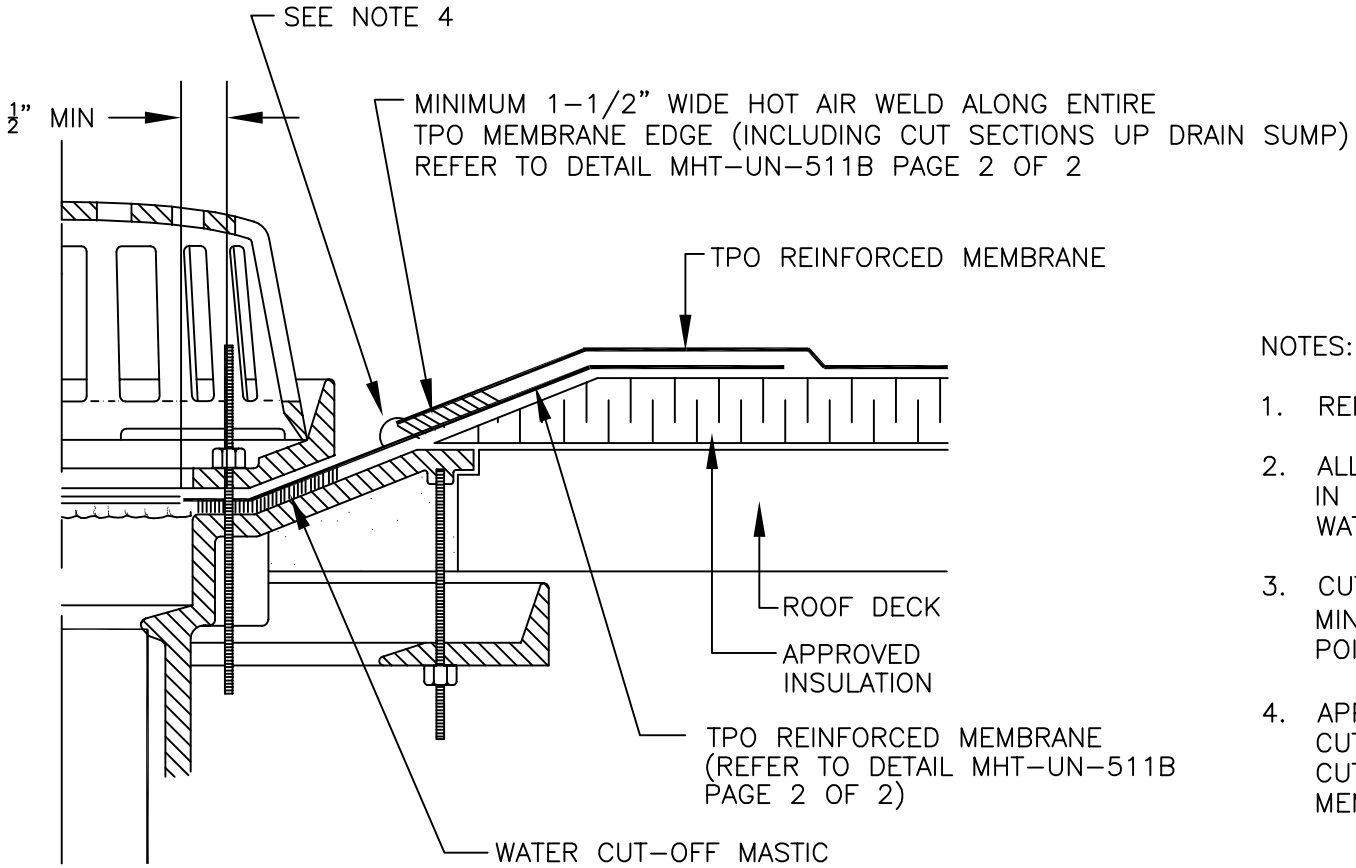

NOTES:

1. REMOVE ALL LEAD AND OTHER FLASHING.
2. ALL DRAIN BOLTS OR CLAMPS MUST BE IN PLACE TO PROVIDE COMPRESSION ON WATER CUT-OFF MASTIC.
3. CUT MEMBRANE SO IT EXTENDS A MINIMUM OF 1/2" FROM ATTACHMENT POINTS OF THE CLAMPING RING.
4. APPROXIMATELY 1/8" DIAMETER BEAD OF CUT-EDGE SEALANT IS REQUIRED ON CUT EDGES OF TPO REINFORCED MEMBRANE.

MULE-HIDE PRODUCTS CO., INC.	**DRAIN FLASHING WITH TARGET** **PAGE 1 OF 2** **SYSTEMS:** **ALL TPO SYSTEMS**	**DETAIL NO.:** **MHT-UN-511B1** REVISION DATE: 10/2013

®

FOR DRAINS WITH TAPERED INSULATION AT DRAIN SUMP GREATER THAN 3" TO 1 HORIZONTAL FOOT

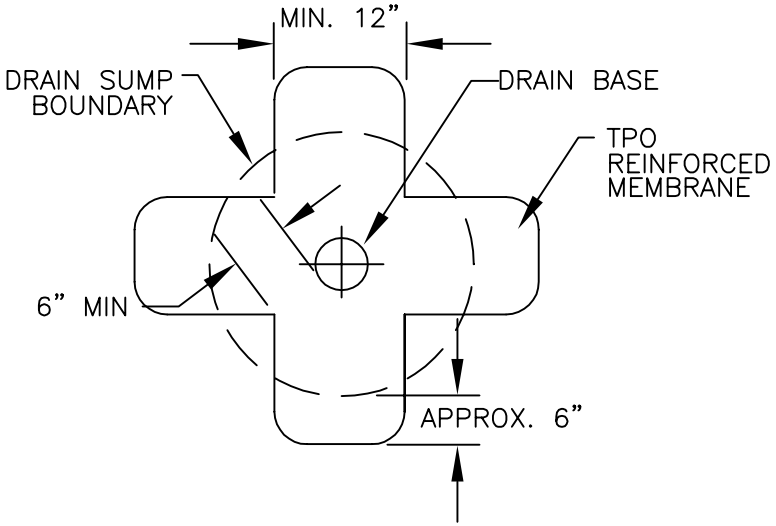

CUT SECTION OF TPO REINFORCED MEMBRANE AS SHOWN AND POSITION INTO DRAIN SUMP. EXTEND MEMBRANE OUT OF DRAIN SUMP APPROXIMATELY 6" (ROUND CORNERS).

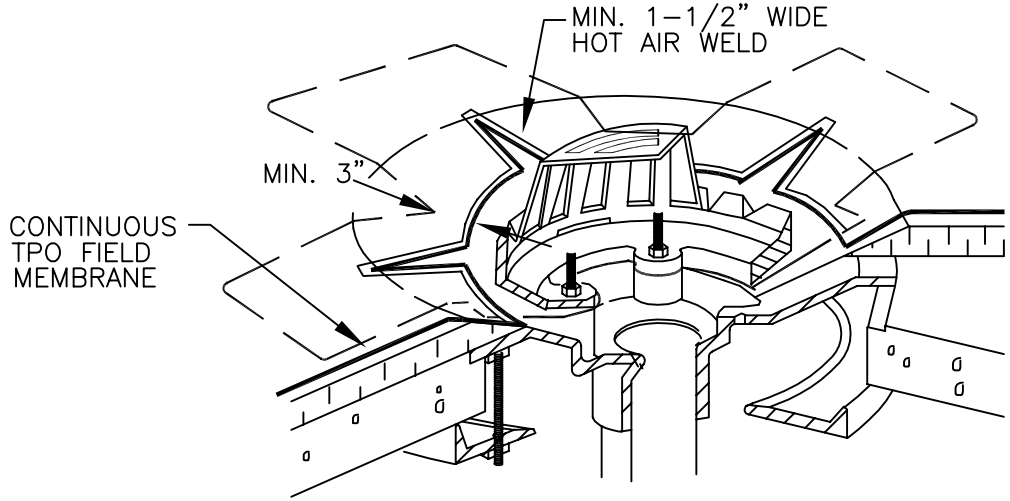

EXTEND TPO REINFORCED MEMBRANE ONTO MEMBRANE SECTION POSITIONED AT DRAIN SUMP AND CUT AS SHOWN TO LAY FLAT IN SUMP. HOT AIR WELD A MINIMUM OF 1-1/2" COMPLETELY SURROUNDING AREA.

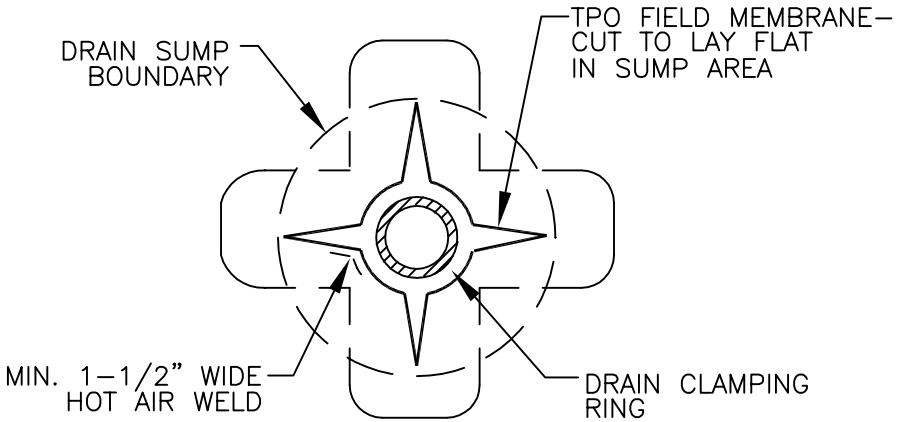

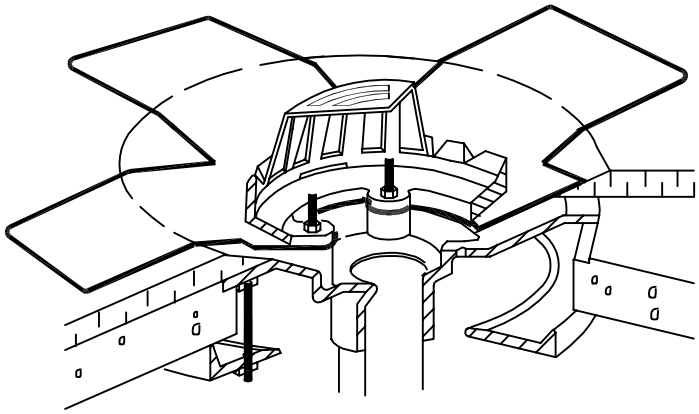

MULE-HIDE PRODUCTS CO., INC.	**DRAIN FLASHING WITH TARGET** **PAGE 2 OF 2** **SYSTEMS:** **ALL TPO SYSTEMS**	**DETAIL NO.:** **MHT-UN-511B2** REVISION DATE: 10/2013

®

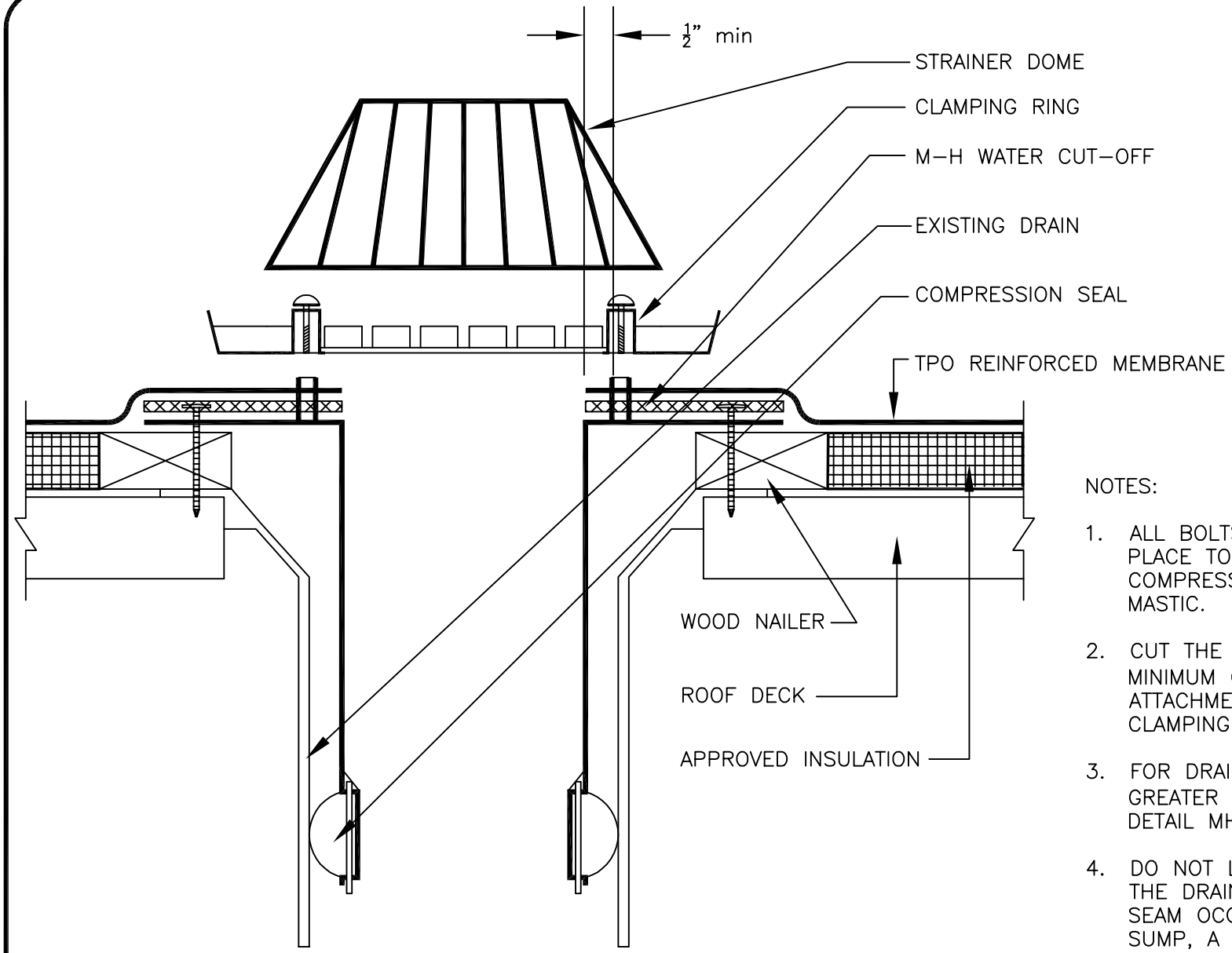

NOTES:

1. ALL BOLTS AND CLAMPS MUST BE IN PLACE TO PROVIDE CONSTANT COMPRESSION ON WATER CUT–OFF MASTIC.
2. CUT THE MEMBRANE SO IT EXTENDS A MINIMUM OF 1/2" FROM THE ATTACHMENT POINTS OF THE DRAIN CLAMPING RING.
3. FOR DRAIN SUMPS WITH SLOPES GREATER THAN 3" IN 12" REFER TO DETAIL MHT–UN–511A.
4. DO NOT LOCATE FIELD SEAM WITHIN THE DRAIN OR DRAIN SUMP. IF FIELD SEAM OCCURs IN DRAIN OR DRAIN SUMP, A TARGET PATCH MUST BE INSTALLED. SEE APPROPRIATE TARGET PATCH DETAIL.

MULE-HIDE PRODUCTS CO., INC.	**RETROFIT ROOF DRAIN COMPRESSION TYPE INSERT**	**DETAIL NO.:**
	SYSTEMS:	**MHT-UN-512**
	ALL TPO SYSTEMS	REVISION DATE: 10/2013

®

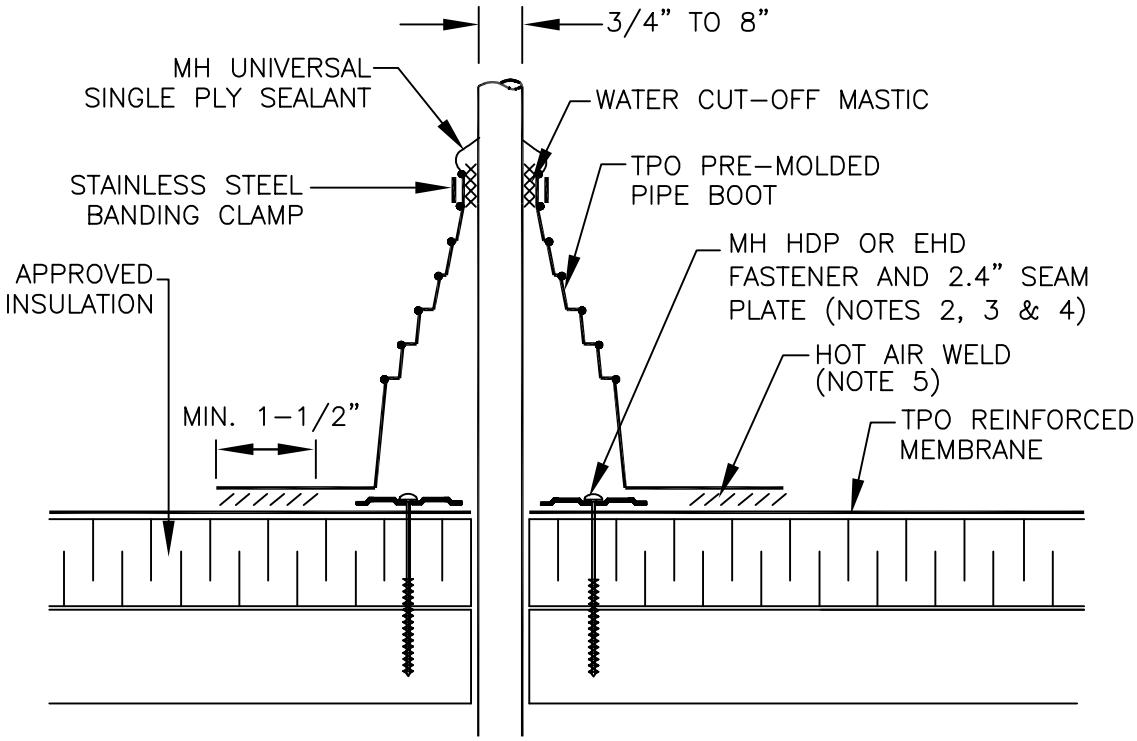

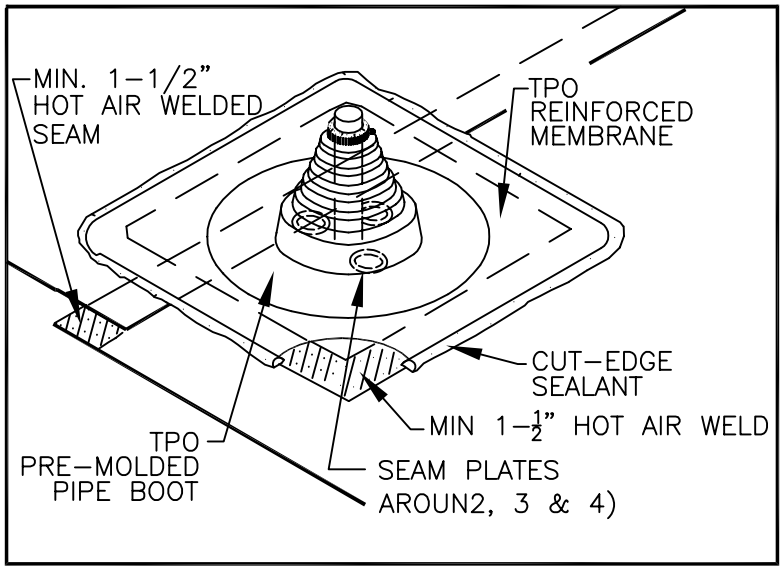

TARGET PATCH REQUIRED WHEN FIELD SEAM INTERSECTS PIPE BOOT FLANGE

NOTES:

1. REMOVE ALL LEAD AND OTHER FLASHING BEFORE INSTALLING FIELD FABRICATED PIPE SEAL.
2. ON MECHANICALLY ATTACHED SYSTEMS, INSTALL 3 FASTENERS AND PLATES AROUND PIPE EQUALLY SPACED. FASTENERS MAY ALSO BE POSITIONED MAXIMUM 12" FROM PIPE, FASTENED 12" O.C. AND FLASHED WITH TPO REINFORCED MEMBRANE.
3. FASTENERS AND SEAM PLATES ARE NOT REQUIRED ON ADHERED SYSTEMS UNLESS PROJECTION DIAMETER EXCEEDS 18".
4. IF SEAM PLATES CANNOT BE INSTALLED AS SHOWN THEY CAN BE POSITIONED OUTSIDE THE PIPE FLSHING FLANGE AS SHOWN ON DETAIL MHT-UN-521A
5. PIPE BOOT DECK FLANGE MUST BE HOT AIR WELDED A MINIMUM OF 1-1/2" BEYOND SEAM PLATES.
6. TEMPERATURE OF PIPE NOT TO EXCEED 160° F
7. INSTALL A SECTION OF TPO REINFORCED MEMBRANE OVER SEAM INTERSECTIONS PRIOR TO INSTALLING PRE-MOLDED PIPE BOOT - SEE INSET.
8. DO NOT CUT PIPE BOOTS TO PULL AROUND PROJECTION. PRE-MOLDED PIPE BOOTS MUST BE SLIPPED OVER THE PIPE.
9. PRE-MOLDED PIPE BOOTS ARE NOT TO BE USED AS PITCH PANS.

MULE-HIDE PRODUCTS CO., INC.	**PRE-MOLDED PIPE BOOT**	**DETAIL NO.:**
	SYSTEMS:	**MHT-UN-520**
	ALL TPO SYSTEMS	REVISION DATE: 10/2013

®

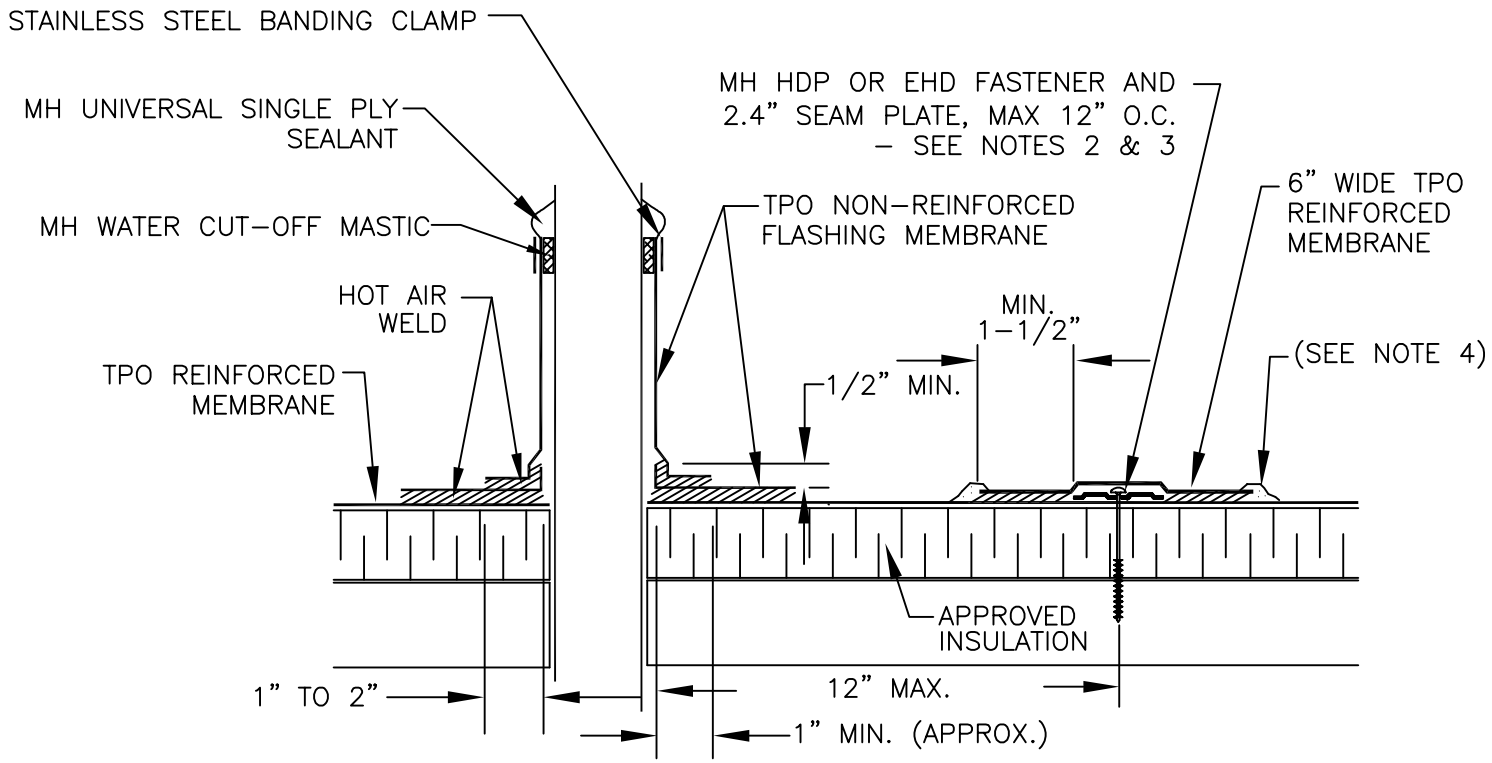

APPLY HEAT TO FLASHING AND FORM BY HAND PRIOR TO HOT AIR WELDING

NOTES:

1. REMOVE ALL LEAD AND OTHER FLASHING BEFORE INSTALLING FIELD FABRICATED PIPE SEAL.
2. ON MECHANICALLY ATTACHED SYSTEMS, INSTALL A MINIMUM OF FOUR (4) 2.4" SEAM PLATES AROUND PROJECTIONS WITH A DIMENSION UP TO 6". ADDITIONAL SEAM PLATES WILL BE REQUIRED FOR PROJECTIONS WITH DIAMETERS GREATER THAN 6" AND SHALL BE SPACED 12" ON CENTER MAX.
3. FASTENERS AND SEAM PLATES ARE NOT REQUIRED ON ADHERED SYSTEMS UNLESS PROJECTION DIAMETER EXCEEDS 18".
4. APPROXIMATELY ⅛" DIAMETER BEAD OF CUT-EDGE SEALANT IS REQUIRED ON CUT EDGES OF TPO REINFORCED MEMBRANE.
5. TEMPERATURE OF PIPE NOT TO EXCEED 160° F.

MULE-HIDE PRODUCTS CO., INC.	**FIELD FABRICATED PIPE FLASHING WITH BANDING CLAMP** **SYSTEMS:** **ALL TPO SYSTEMS**	**DETAIL NO.:** **MHT-UN-521A** REVISION DATE: 10/2013

®

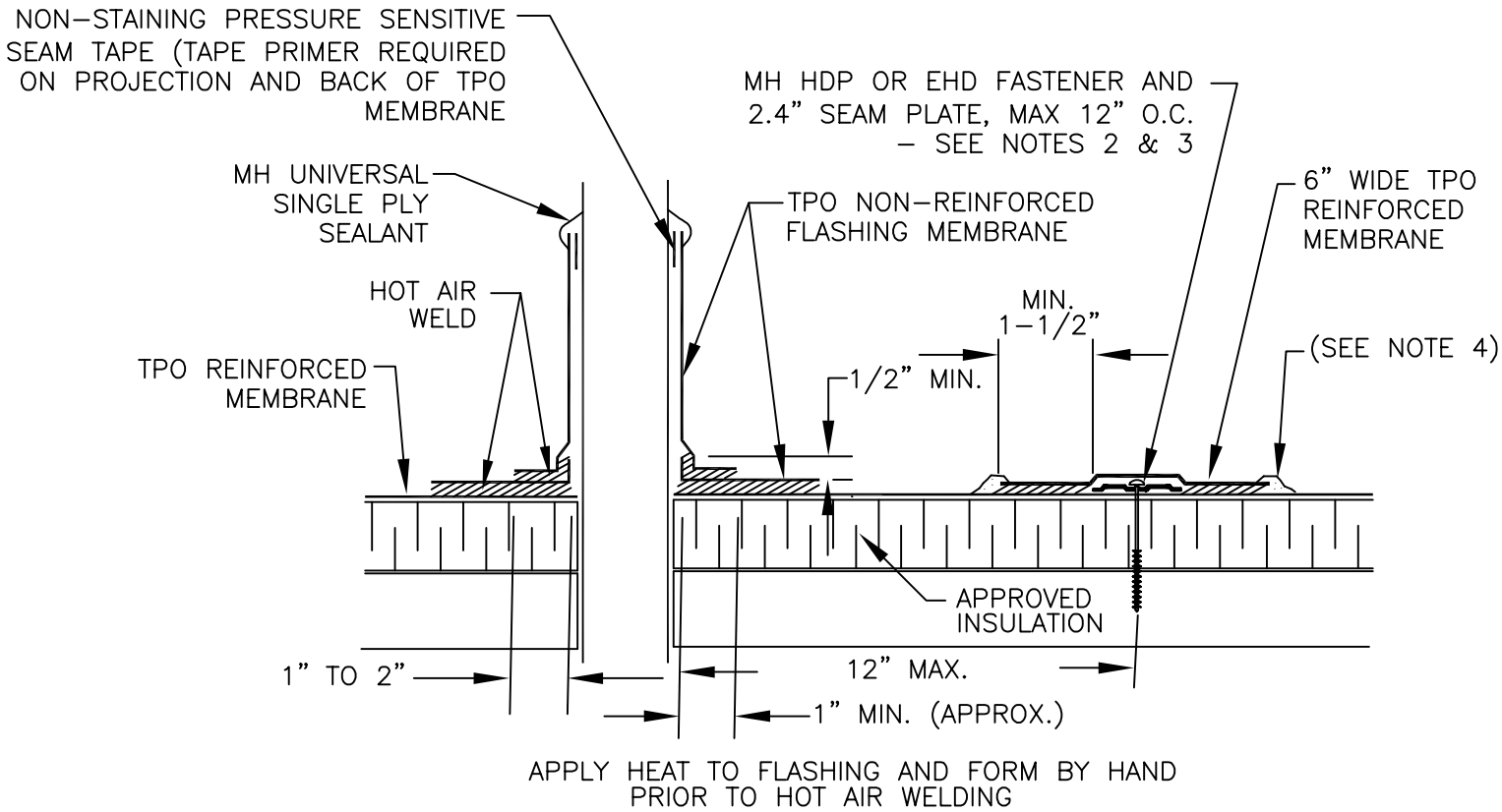

APPLY HEAT TO FLASHING AND FORM BY HAND PRIOR TO HOT AIR WELDING

NOTES:

1. REMOVE ALL LEAD AND OTHER FLASHING BEFORE INSTALLING FIELD FABRICATED PIPE SEAL.
2. ON A MECHANICALLY ATTACHED SYSTEM, INSTALL A MINIMUM OF FOUR (4) 2.4" SEAM PLATES AROUND PROJECTIONS WITH A DIMENSION UP TO 6". ADDITIONAL SEAM PLATES WILL BE REQUIRED FOR PROJECTIONS WITH DIAMETERS GREATER THAN 6" AND SHALL BE SPACED 12" ON CENTER MAX.
3. FASTENERS AND SEAM PLATES ARE NOT REQUIRED ON ADHERED SYSTEMS UNLESS PROJECTION DIAMETER EXCEEDS 18".
4. APPROXIMATELY ⅛" DIAMETER BEAD OF CUT–EDGE SEALANT IS REQUIRED ON CUT EDGES OF TPO REINFORCED MEMBRANE.
5. TEMPERATURE OF PIPE NOT TO EXCEED 160° F.

MULE-HIDE PRODUCTS CO., INC.	**FIELD FABRICATED PIPE FLASHING WITH SEAM TAPE** **SYSTEMS:** **ALL TPO SYSTEMS**	**DETAIL NO.:** **MHT-UN-521B** REVISION DATE: 10/2013

®

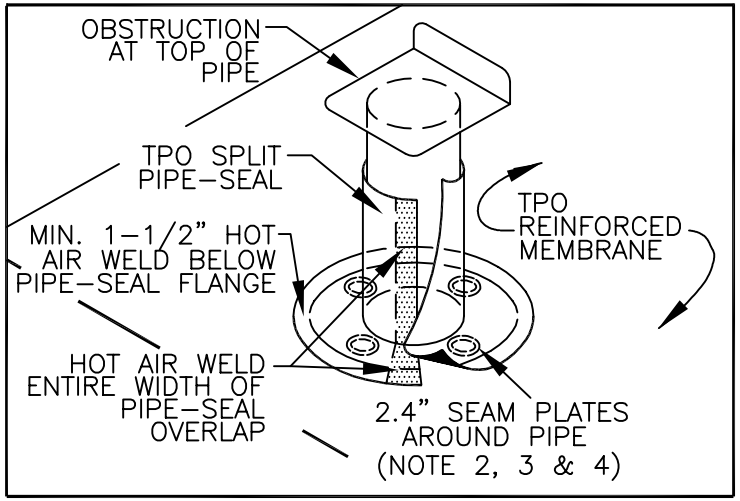

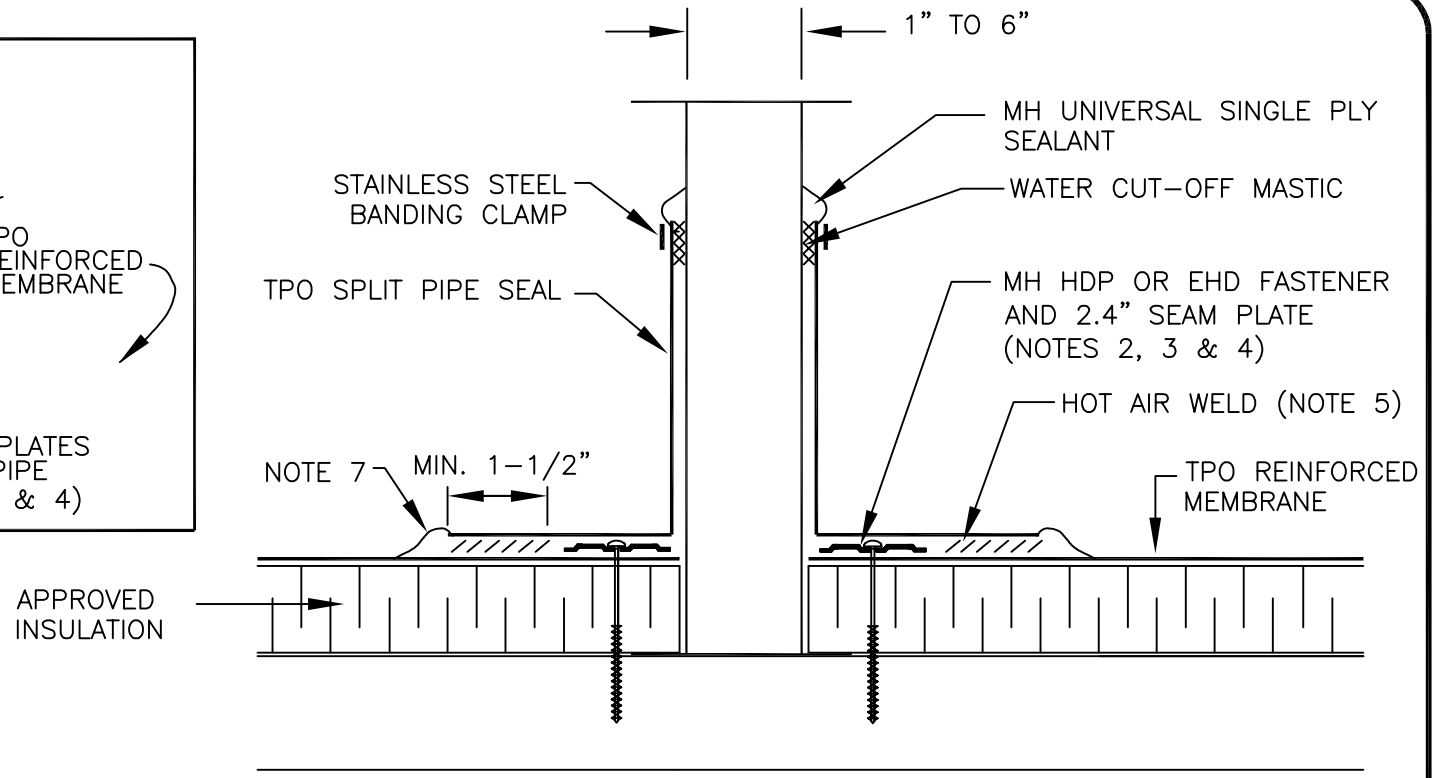

NOTES:

1. REMOVE ALL LEAD AND OTHER FLASHING BEFORE INSTALLING SPLIT PIPE SEAL.
2. ON MECHANICALLY ATTACHED SYSTEMS, INSTALL A MINIMUM OF FOUR (4) 2.4" SEAM PLATES AROUND PROJECTIONS WITH A DIMENSION UP TO 6". ADDITIONAL SEAM PLATES WILL BE REQUIRED FOR PROJECTIONS WITH DIAMETERS GREATER THAN 6" AND SHALL BE SPACED 12" ON CENTER MAX.
3. FASTENERS AND SEAM PLATES ARE NOT REQUIRED ON ADHERED SYSTEMS UNLESS PROJECTION DIAMETER EXCEEDS 18".
4. IF SEAM PLATES CANNOT BE INSTALLED AS SHOWN THEY CAN BE POSITIONED OUTSIDE THE PIPE FLSHING FLANGE AS SHOWN ON DETAIL MHT–UN–521A.
5. PIPE FLASHING DECK FLANGE MUST BE HOT AIR WELDED A MINIMUM OF 1–1/2" BEYOND SEAM PLATES.
6. TEMPERATURE OF PIPE NOT TO EXCEED 160° F.
7. APPROXIMATELY 1/8" DIAMETER BEAD OF CUT–EDGE SEALANT IS REQUIRED ON CUT EDGE OF TPO REINFORCED MEMBRANE.
8. TPO SPLIT PIPE BOOTS ARE NOT TO BE USED AS PITCH PANS.

MULE-HIDE PRODUCTS CO., INC.	**TPO SPLIT PIPE BOOT**	**DETAIL NO.:**
	SYSTEMS:	**MHT-UN-521C**
	ALL TPO SYSTEMS	REVISION DATE: 10/2013

®

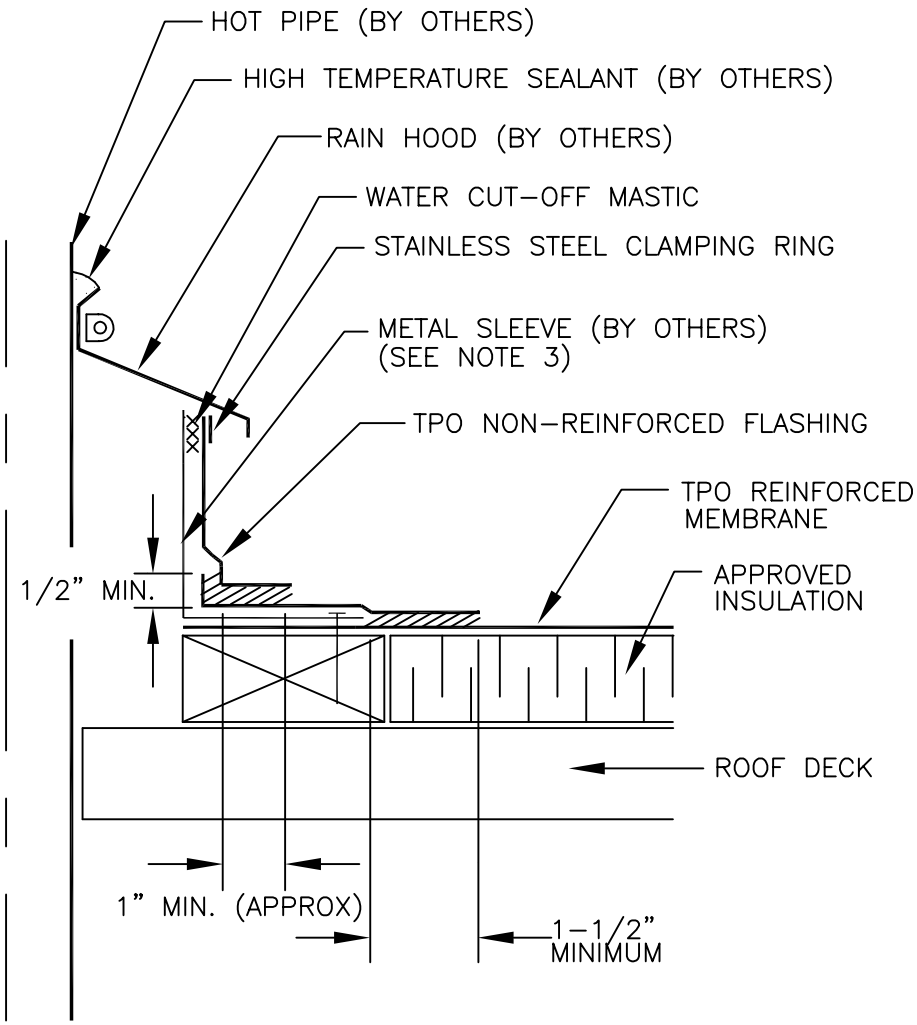

PRE-HEAT AND PRE-STRETCH TPO NON-REINFORCED FLASHING MEMBRANE TO FORM AROUND PIPE PRIOR TO HOT AIR WELDING IN PLACE

NOTES:

1. THIS DETAIL USED FOR FIELD-FABRICATED PIPE SEAL FOR USE WITH HOT PIPE, 160° F OR HOTTER.
2. TPO NON-REINFORCED FLASHING WRAPPED AROUND PIPE SHALL HAVE MINIMUM 1-1/2" VERTICAL HOT AIR WELD.
3. TEMPERATURE OF METAL SLEEVE MUST NOT EXCEED 160° F.

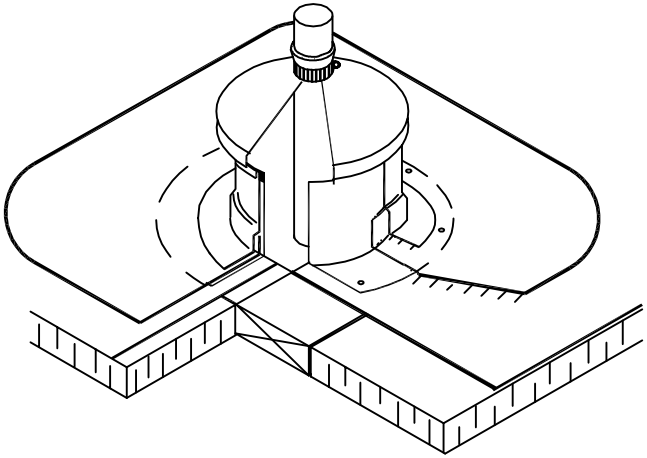

MULE-HIDE PRODUCTS CO., INC.	**HOT PIPE FLASHING WITH COLD SLEEVE** **SYSTEMS:** **ALL TPO SYSTEMS**	**DETAIL NO.:** **MHT-UN-522** REVISION DATE: 10/2013

®

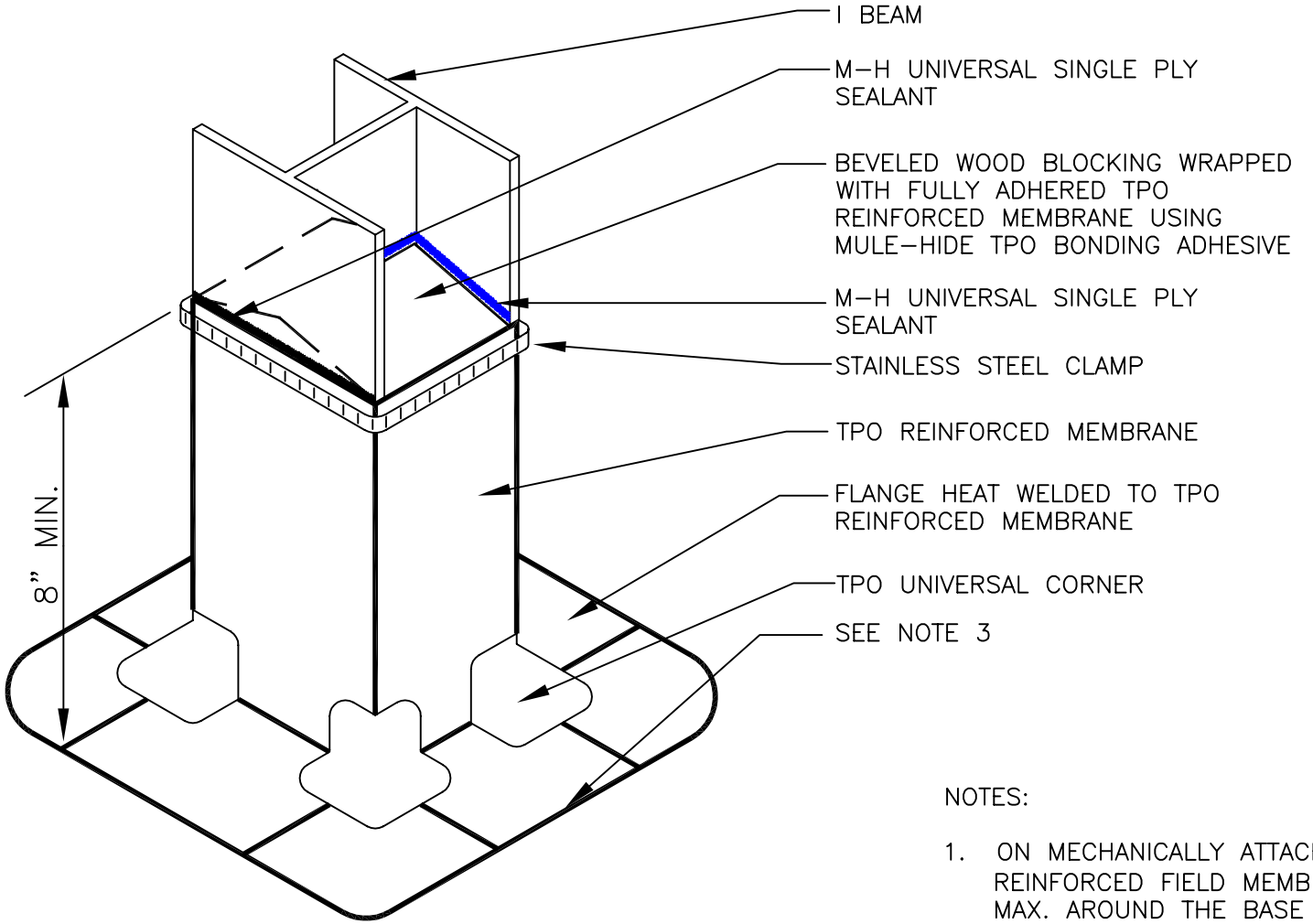

NOTES:

1. ON MECHANICALLY ATTACHED SYSTEMS, FASTEN TPO REINFORCED FIELD MEMBRANE (NOT SHOWN) 12" O.C. MAX. AROUND THE BASE OF THE BEAM.

2. WOOD BLOCKING MUST BE EMBEDDED IN A LAYER OF M–H UNIVERSAL SINGLE PLY SEALANT PRIOR TO FLASHING.

3. APPROXIMATELY ⅛" DIAMETER BEAD OF CUT–EDGE SEALANT IS REQUIRED ON CUT EDGES OF TPO REINFORCED MEMBRANE.

MULE-HIDE PRODUCTS CO., INC.	**I-BEAM SUPPORT FLASHING**	**DETAIL NO.:**
	SYSTEMS:	**MHT-UN-523**
	ALL TPO SYSTEMS	REVISION DATE: 10/2013

®

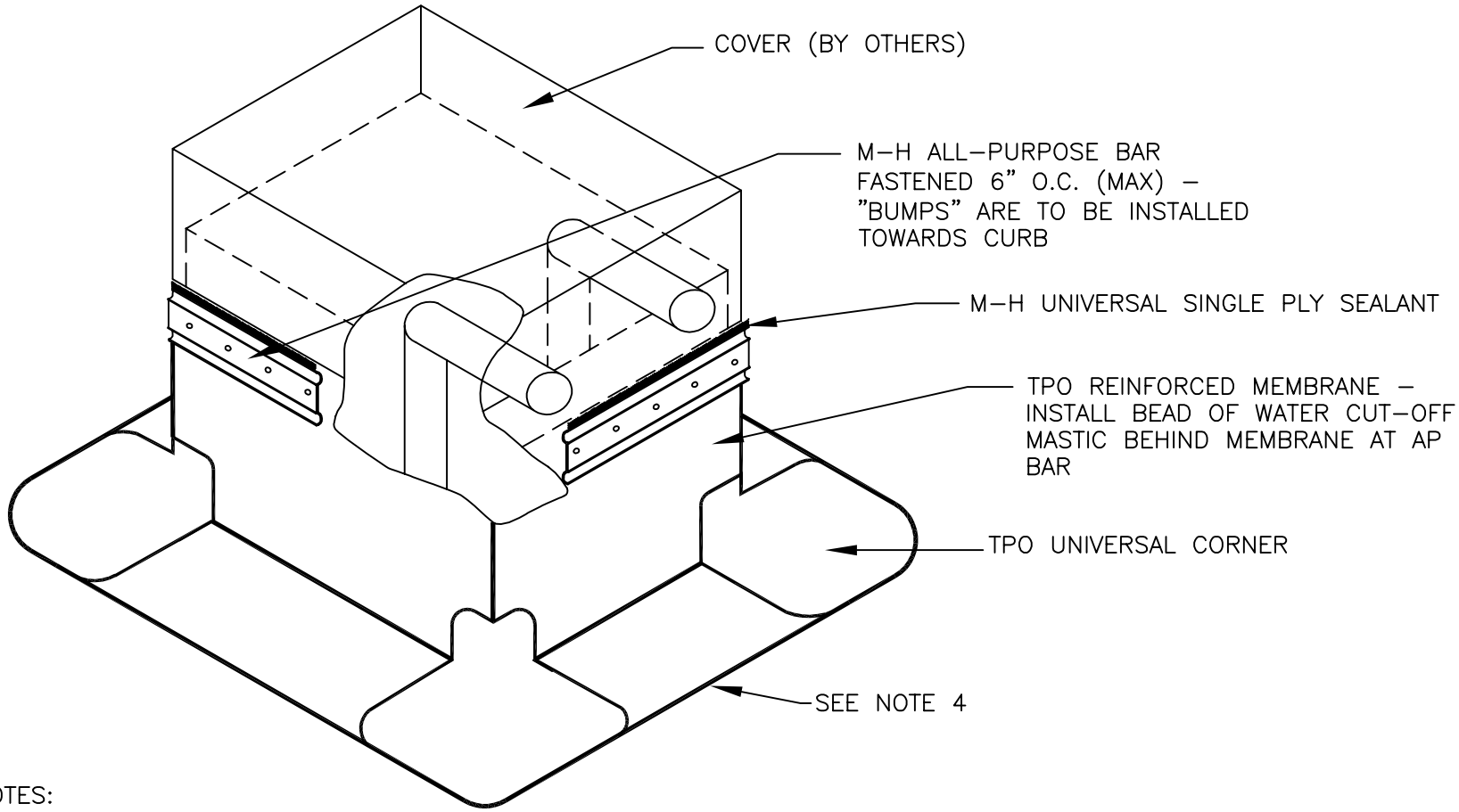

NOTES:

1. SLOPE TOP OF COVER AWAY FROM EXISTING PIPES.
2. IT IS THE CONTRACTOR'S RESPONSIBILITY TO SEAL AROUND THE PIPES AT THE COVER OPENINGS.
3. ON A MECHANICALLY ATTACHED SYSTEM, INSTALL A MINIMUM OF FOUR (4) 2.4" SEAM PLATES AROUND PROJECTIONS WITH A DIMENSION UP TO 6". ADDITIONAL SEAM PLATES WILL BE REQUIRED FOR PROJECTIONS WITH DIMENSIONS GREATER THAN 6" AND SHALL BE SPACED 12" ON CENTER MAX.
4. APPROXIMATELY ⅛" DIAMETER BEAD OF CUT–EDGE SEALANT IS REQUIRED ON CUT EDGES OF TPO REINFORCED MEMBRANE.

MULE-HIDE PRODUCTS CO., INC.	**MULTIPLE PIPE PENETRATION**	**DETAIL NO.:**
	SYSTEMS:	**MHT-UN-525**
	ALL TPO SYSTEMS	REVISION DATE: 10/2013

®

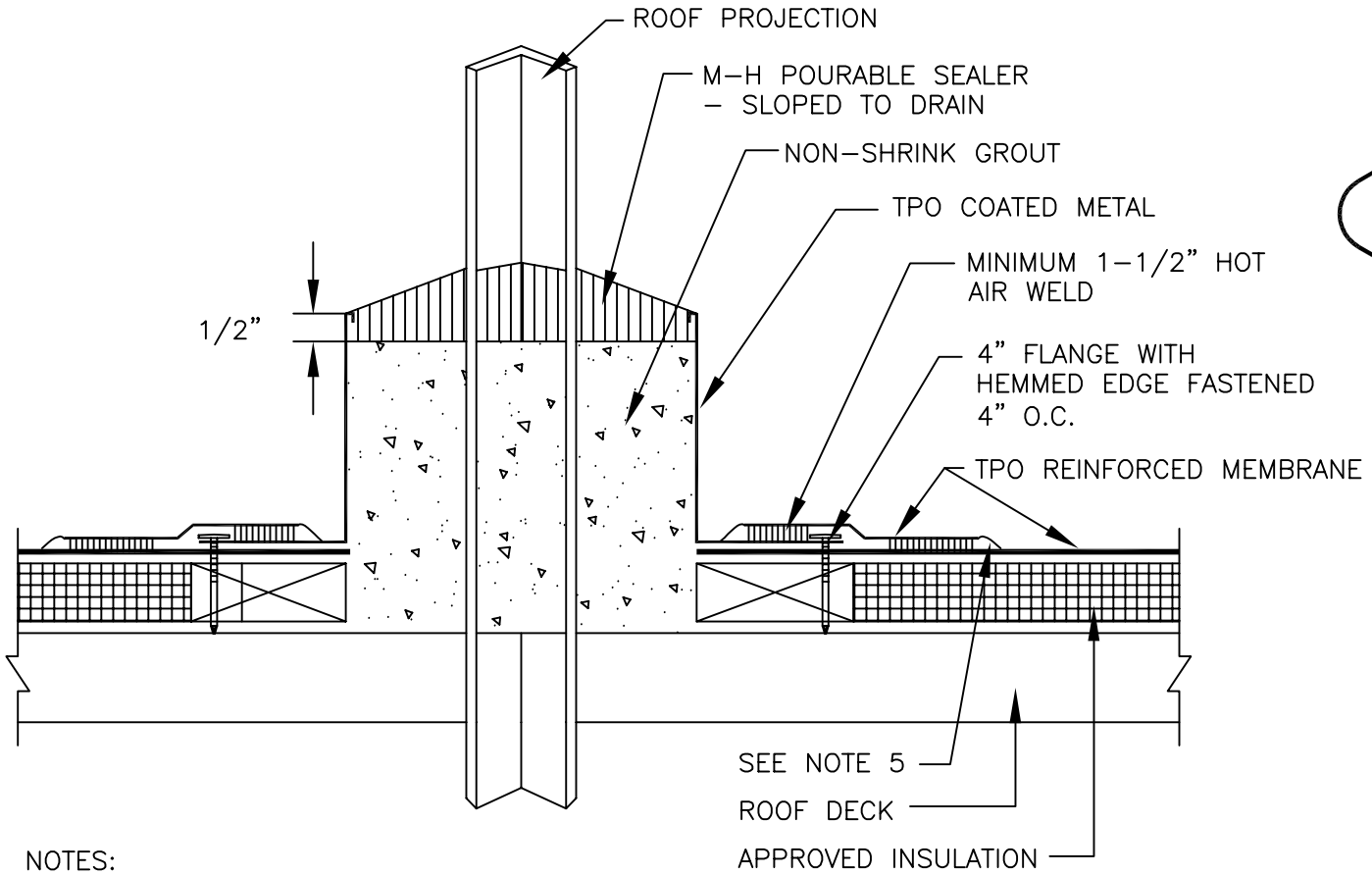

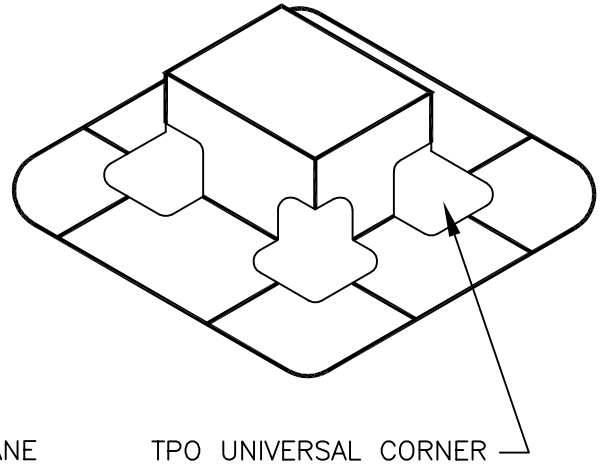

NOTES:

1. BEND TPO COATED METAL TO FORM A PITCH PAN AS SHOWN.
2. ALLOW 2" CLEARANCE AROUND THE PROJECTION
3. ALLOW GROUT TO CURE AND DRY BEFORE APPLYING POURABLE SEALER.
4. INSIDE SURFACE OF TPO COATED METAL PITCH PAN (BARE METAL SIDE) AND OUTSIDE FACES OF PROJECTION MUST BE CLEAN AND PRIMED WITH MULE–HIDE TAPE PRIMER.
5. APPROXIMATELY ⅛" DIAMETER BEAD OF CUT–EDGE SEALANT IS REQUIRED ON CUT EDGES OF TPO REINFORCED MEMBRANE.
6. PRE–MOLDED PIPE BOOTS ARE NOT TO BE USED AS PITCH PANS.

MULE-HIDE PRODUCTS CO., INC.	**PITCH PAN MEMBRANE COATED METAL**	**DETAIL NO.:**
	SYSTEMS:	**MHT-UN-526**
	ALL TPO SYSTEMS	REVISION DATE: 10/2013

®

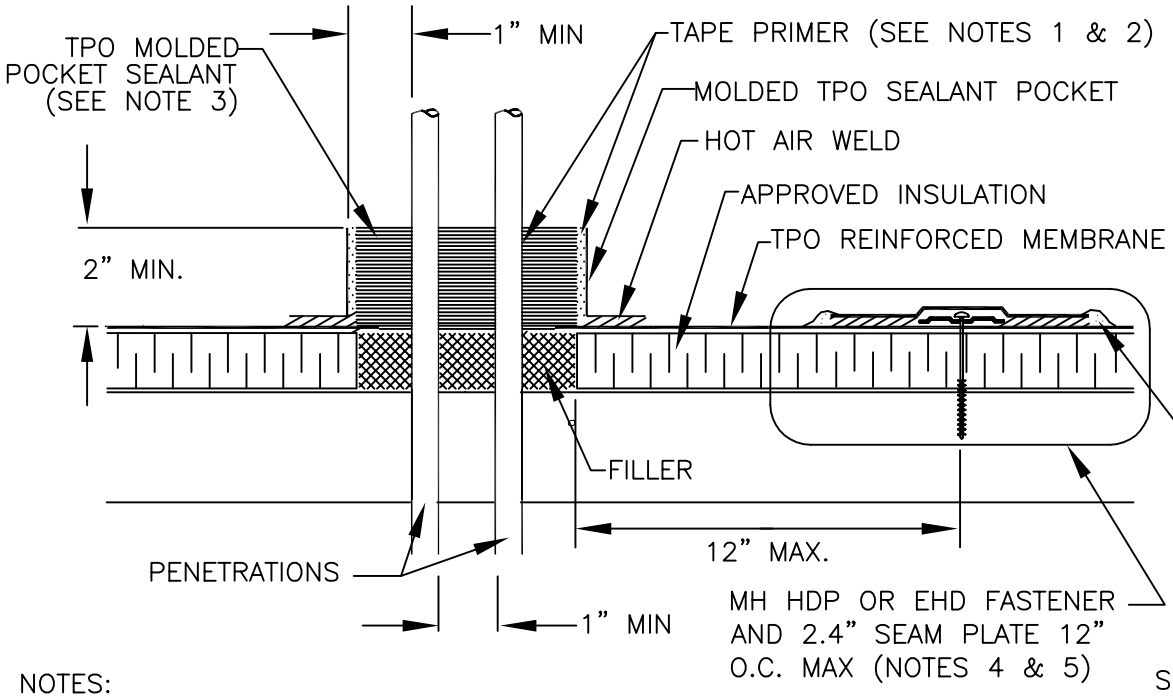

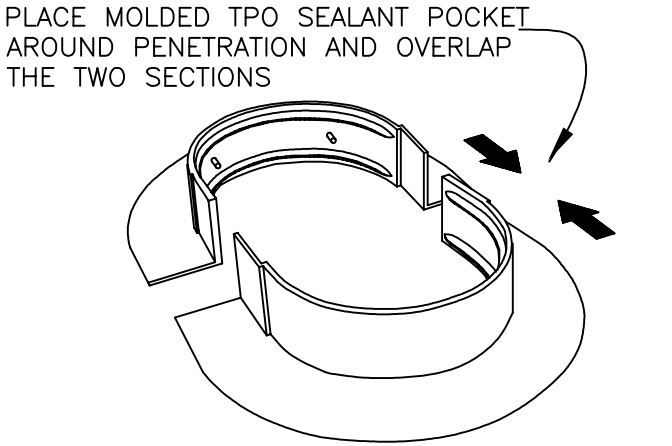

REFER TO TECHNICAL DATA BULLETIN (TDB) FOR STEP–BY–STEP INSTALLATION PROCEDURES IN POCKET PACKAGES.

NOTES:

1. TAPE PRIMER MUST BE APPLIED TO ALL INSIDE SURFACES AND PENETRATIONS PRIOR TO FILLING WITH SEALANT.
2. FILL POCKET COMPLETELY WITH THERMOPLASTIC POURABLE SEALER UNTIL THE RIM IS COVERED WITH SEALANT, ENSURE ALL VOIDS ARE FILLED.
3. SEALANT POCKET TO BE MINIMUM 1" FROM PENETRATION ON ANY SIDE.
4. ON MECHANICALLY FASTENED SYSTEMS, INSTALL A MINIMUM OF FOUR (4) 2.4" SEAM PLATES AROUND PROJECTIONS WITH A DIMENSION UP TO 6". ADDITIONAL SEAM PLATES WILL BE REQUIRED FOR PROJECTIONS WITH DIAMETERS GREATER THAN 6" AND SHALL BE SPACED 12" ON CENTER MAX.
5. FASTENERS AND SEAM PLATES ARE NOT REQUIRED ON ADHERED SYSTEMS UNLESS PROJECTION DIAMETER EXCEEDS 18".
6. APPROXIMATELY ⅛" DIAMETER BEAD OF CUT–EDGE SEALANT IS REQUIRED ON CUT EDGES OF TPO REINFORCED MEMBRANE.
7. TEMPERATURE OF PENETRATION NOT TO EXCEED 160° F.
8. PRE–MOLDED PIPE BOOTS ARE NOT TO BE USED AS PITCH PANS.

MULE-HIDE PRODUCTS CO., INC.	**TPO MOLDED SEALANT POCKET**	**DETAIL NO.:**
	SYSTEMS:	**MHT-UN-527**
	ALL TPO SYSTEMS	REVISION DATE: 10/2013

®

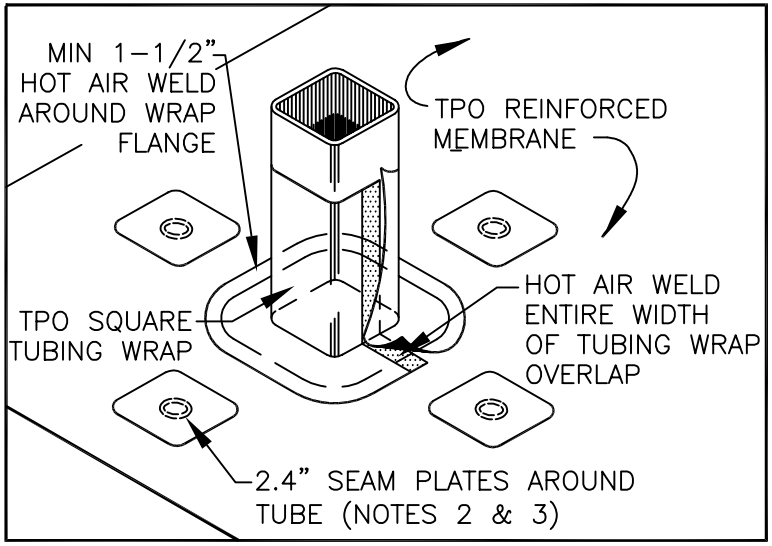

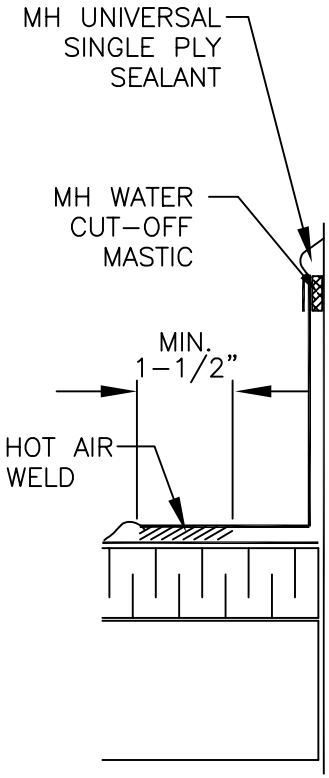

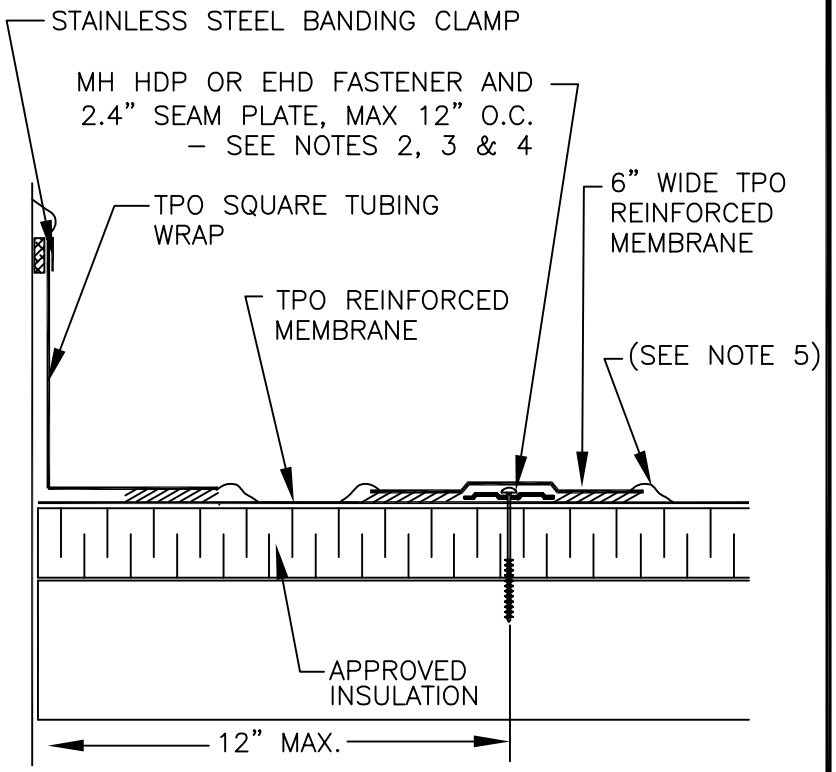

NOTES:

1. REMOVE ALL LEAD AND OTHER FLASHING BEFORE INSTALLING FIELD FABRICATED PIPE SEAL.
2. ON MECHANICALLY FASTENED SYSTEMS, INSTALL A MINIMUM OF FOUR (4) 2.4" SEAM PLATES AROUND PROJECTIONS WITH A DIMENSION UP TO 6". ADDITIONAL SEAM PLATES WILL BE REQUIRED FOR PROJECTIONS WITH DIAMETERS GREATER THAN 6" AND SHALL BE SPACED 12" ON CENTER MAX.
3. FASTENERS AND SEAM PLATES ARE NOT REQUIRED ON ADHERED SYSTEMS UNLESS PROJECTION DIAMETER EXCEEDS 18".
4. PLATES MAY BE POSITIONED INSIDE (OR BELOW) THE PIPE FLASHING FLANGE AS SHOWN ON DETAIL MHT–UN–521C.
5. APPROXIMATELY ⅛" DIAMETER BEAD OF CUT–EDGE SEALANT IS REQUIRED ON CUT EDGES OF TPO REINFORCED MEMBRANE.
6. SQUARE TUBING WRAP IS NOT TO BE USED AS A PITCH PAN.

MULE-HIDE PRODUCTS CO., INC.	**PREFABRICATED SQUARE TUBING WRAP**	**DETAIL NO.:**
	SYSTEMS:	**MHT-UN-528**
	ALL TPO SYSTEMS	REVISION DATE: 10/2013

®

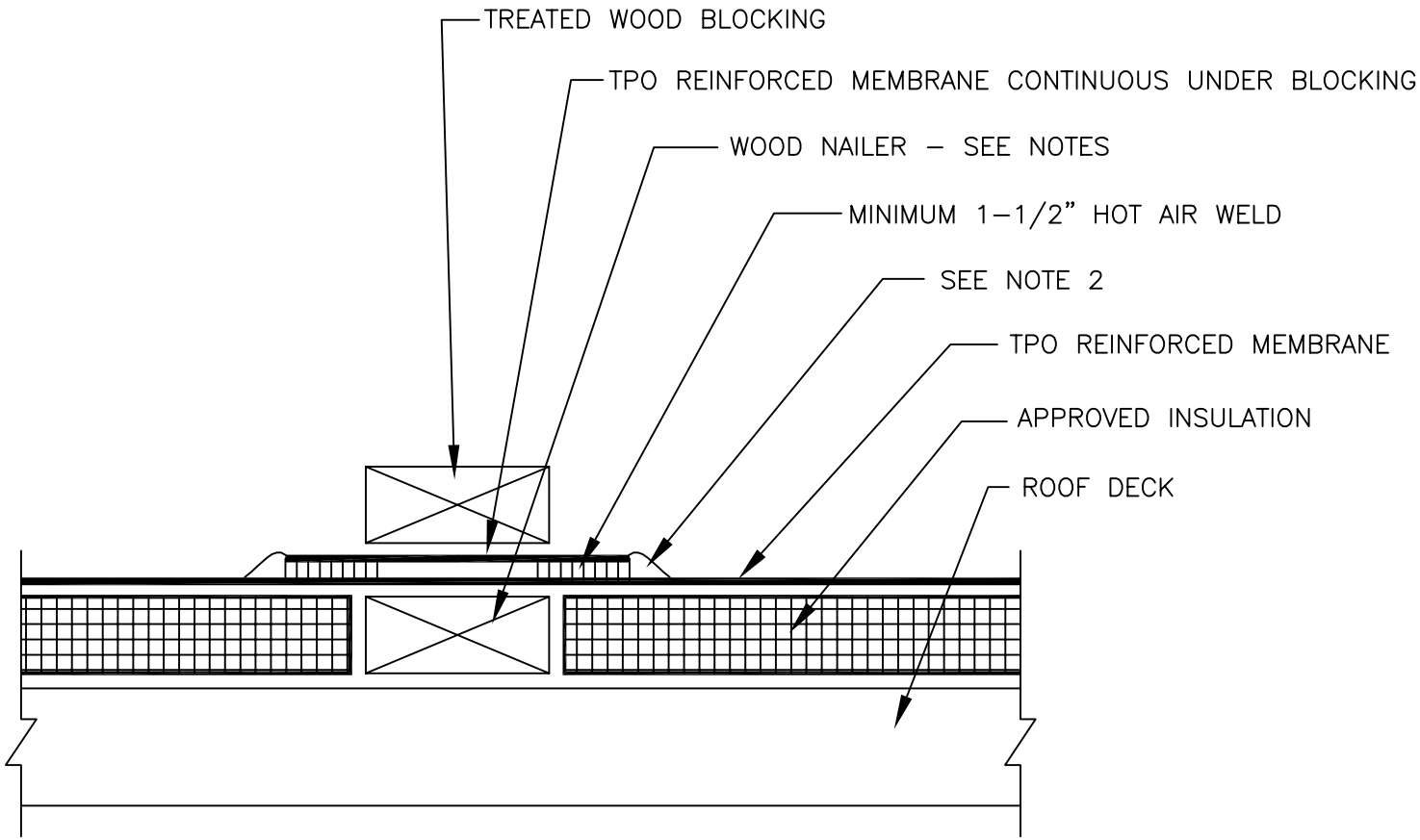

NOTES:

1. IF THE INSULATION COMPRESSVIE STRENGTH IS INSUFFICIENT FOR THE EQUIPMENT WEIGHT, INSTALL WOOD NAILERS UNDER THE EQUIPMENT CARRYING SLEEPER, MATCHING THE HEIGHT OF THE INSULATION.

2. APPROXIMATELY ⅛" DIAMETER BEAD OF CUT–EDGE SEALANT IS REQUIRED ON CUT EDGES OF TPO REINFORCED MEMBRANE.

MULE-HIDE PRODUCTS CO., INC.	**WOOD SLEEPER**	**DETAIL NO.:**
	SYSTEMS:	**MHT-UN-530**
	ALL TPO SYSTEMS	REVISION DATE: 10/2013

®

NOTES:

1. POSITION SEAM PLATES 1/2" TO 1" FROM EDGE OF DECK MEMBRANE.

2. APPROXIMATELY 1/8" DIAMETER BEAD OF CUT-EDGE SEALANT IS REQUIRED ON CUT EDGES OF TPO REINFORCED MEMBRANE.

3. SLEEPER HEIGHT SHOULD BE SUFFICIENT TO ELEVATE THE EQUIPMENT SUPPORT BRACKET ABOVE THE WATER LINE.

4. SLEEPER SHALL BE FULLY FLASHED TO COMPLETELY SEAL SLEEPER

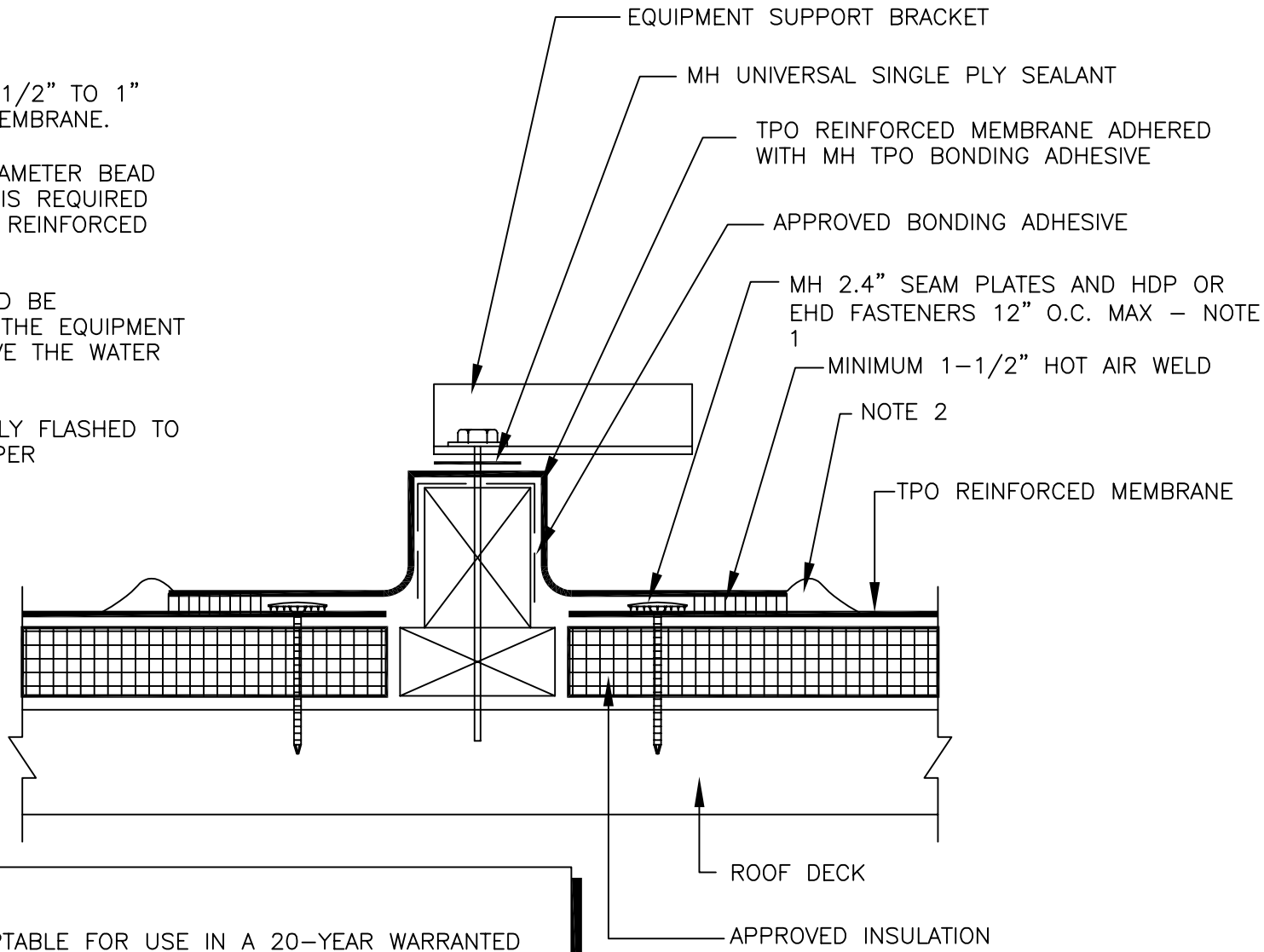

NOTE:

THIS DETAIL IS NOT ACCEPTABLE FOR USE IN A 20-YEAR WARRANTED SYSTEM.

FOR A 20-YEAR WARRANTED SYSTEM INSTALL UNIT ON RAISED PLATFORM WITH SUPPORTS FLASHED AS SHOWN IN DETAIL MHT-UN-521C.

MULE-HIDE PRODUCTS CO., INC.	**FIXED EQUIPMENT SUPPORT**	**DETAIL NO.:**
	SYSTEMS:	**MHT-UN-531**
	ALL TPO SYSTEMS	REVISION DATE: 10/2013

®

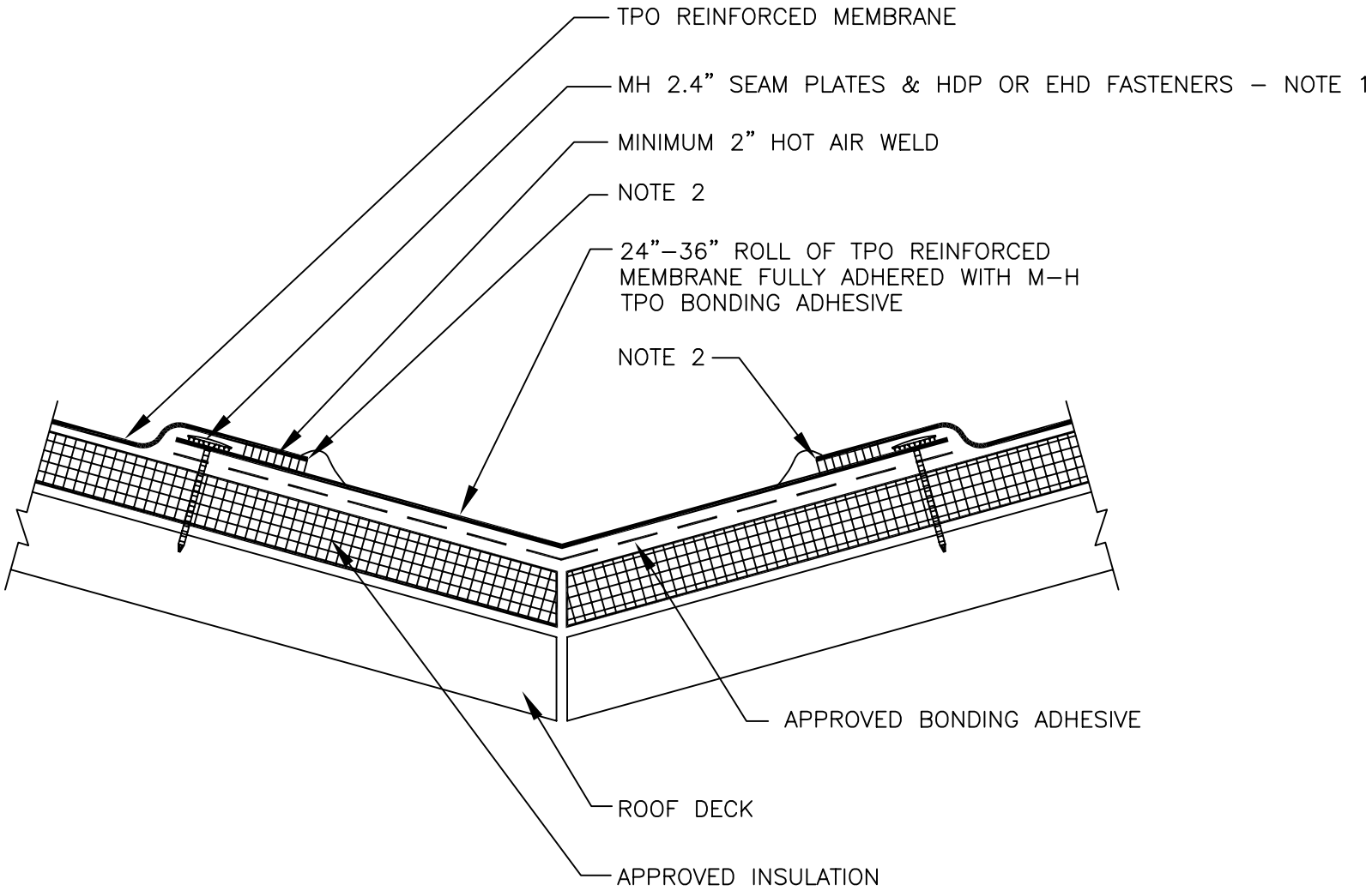

NOTES:

1. MEMBRANE FASTENER SPACING NOT TO EXCEED 12" O.C.
2. APPROXIMATELY 1/8" DIAMETER BEAD OF CUT–EDGE SEALANT IS REQUIRED ON CUT EDGES OF TPO REINFORCED MEMBRANE.

NOTE:

THIS DETAIL IS ACCEPTABLE FOR USE IN A 20–YEAR WARRANTED SYSTEM

MULE-HIDE PRODUCTS CO., INC.	**VALLEY FLASHING**	**DETAIL NO.:**
	SYSTEMS:	**MHT-MA-601A**
	MECHANICALLY ATTACHED	REVISION DATE: 10/2013

®

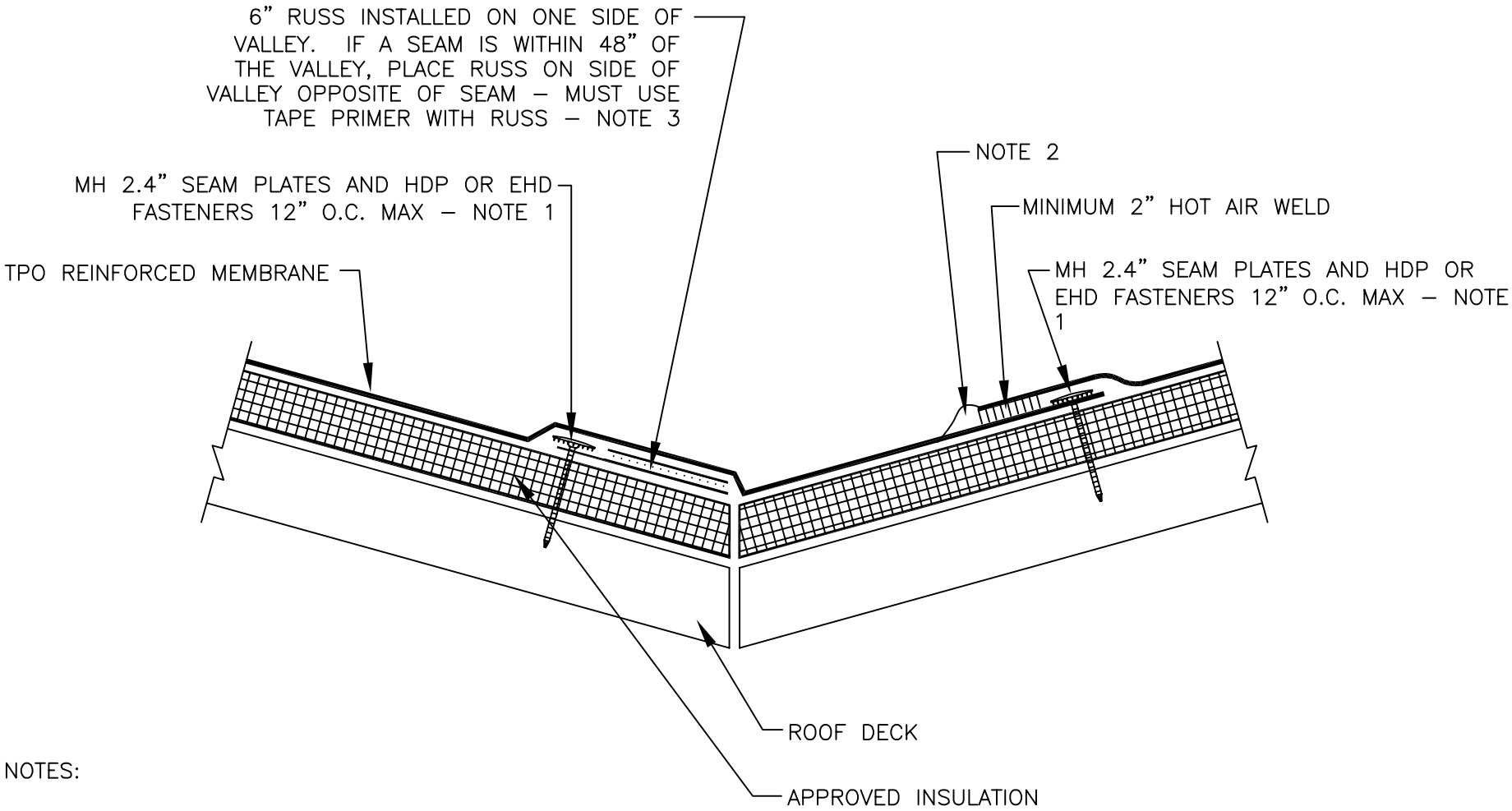

NOTES:

1. MEMBRANE FASTENER SPACING NOT TO EXCEED 12" O.C.
2. APPROXIMATELY 1/8" DIAMETER BEAD OF CUT–EDGE SEALANT IS REQUIRED ON CUT EDGES OF TPO REINFORCED MEMBRANE.
3. RUSS PRODUCTS CANNOT BE USED WITH FLEECEBACK OR SELF ADHERING MEMBRANES.

NOTE:

THIS DETAIL IS ACCEPTABLE FOR USE IN A 20–YEAR WARRANTED SYSTEM

MULE-HIDE PRODUCTS CO., INC.	**VALLEY FLASHING 6" RUSS**	**DETAIL NO.:**
	SYSTEMS:	**MHT-MA-601B**
	MECHANICALLY ATTACHED	REVISION DATE: 10/2013

®

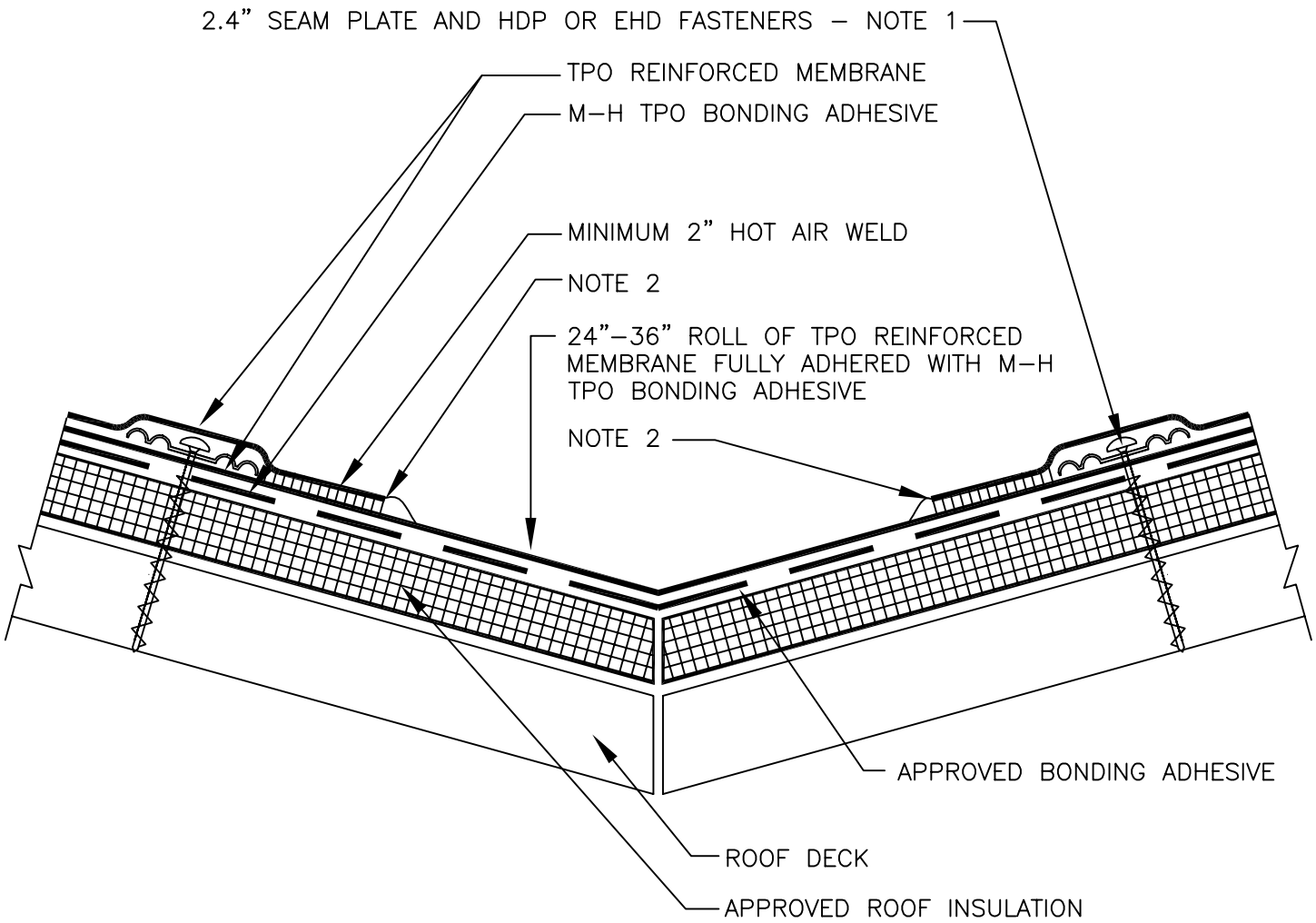

NOTES:

1. MEMBRANE FASTENER SPACING NOT TO EXCEED 12" O.C.
2. APPROXIMATELY 1/8" DIAMETER BEAD OF CUT–EDGE SEALANT IS REQUIRED ON CUT EDGES OF TPO REINFORCED MEMBRANE.

NOTE:

THIS DETAIL IS ACCEPTABLE FOR USE IN A 20–YEAR WARRANTED SYSTEM

MULE-HIDE PRODUCTS CO., INC.	**VALLEY FLASHING**	**DETAIL NO.:**
	SYSTEMS:	**MHT-FA-601C**
	FULLY ADHERED	REVISION DATE: 10/2013

®

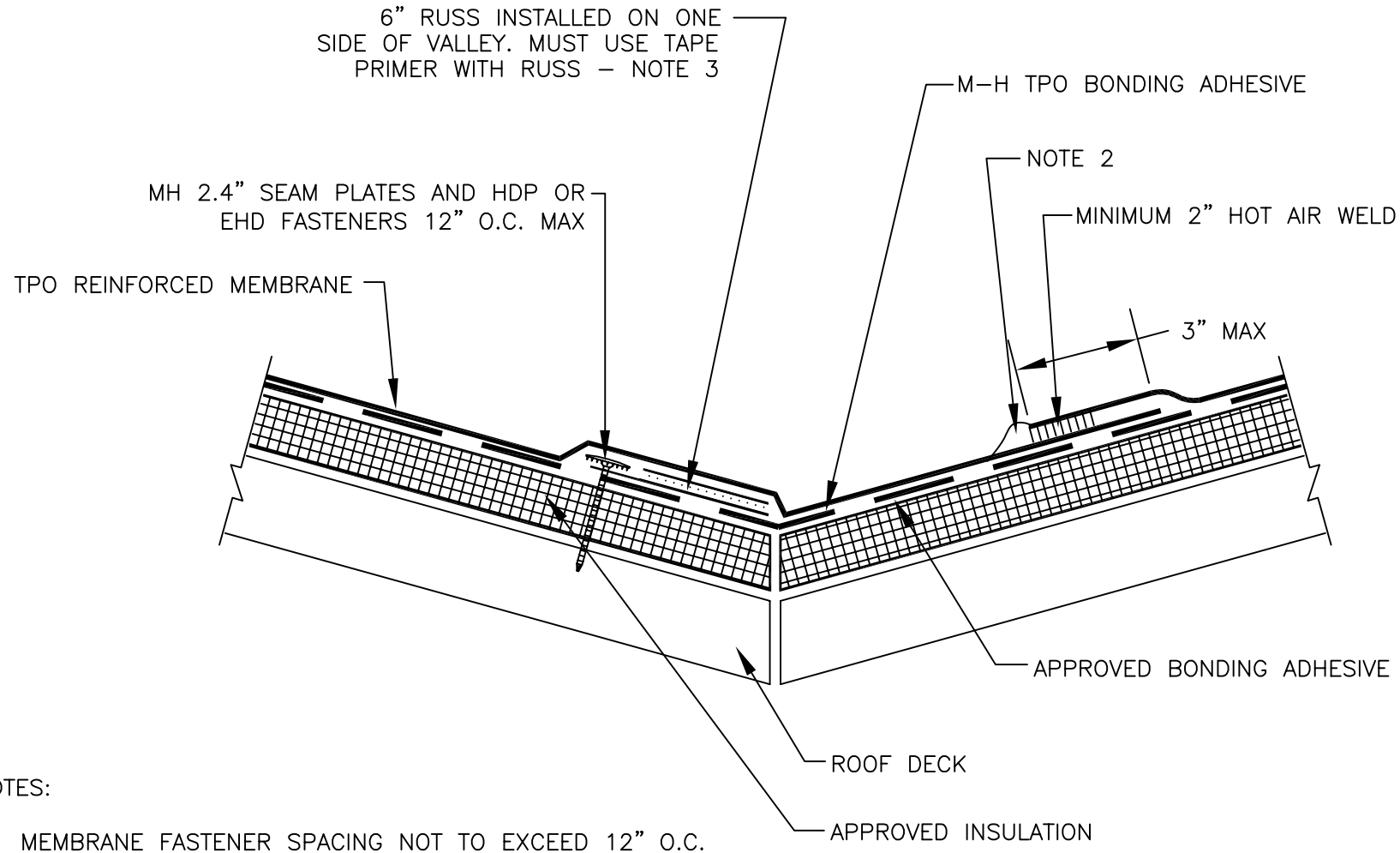

NOTES:

1. MEMBRANE FASTENER SPACING NOT TO EXCEED 12" O.C.
2. APPROXIMATELY 1/8" DIAMETER BEAD OF CUT–EDGE SEALANT IS REQUIRED ON CUT EDGES OF TPO REINFORCED MEMBRANE.
3. RUSS PRODUCTS CANNOT BE USED WITH FLEECEBACK OR SELF ADHERING MEMBRANES.

NOTE:

THIS DETAIL IS ACCEPTABLE FOR USE IN A 20–YEAR WARRANTED SYSTEM

MULE-HIDE PRODUCTS CO., INC.	**VALLEY FLASHING 6" RUSS** **SYSTEMS:** **FULLY ADHERED**	**DETAIL NO.:** **MHT-FA-601D** REVISION DATE: 10/2013

®

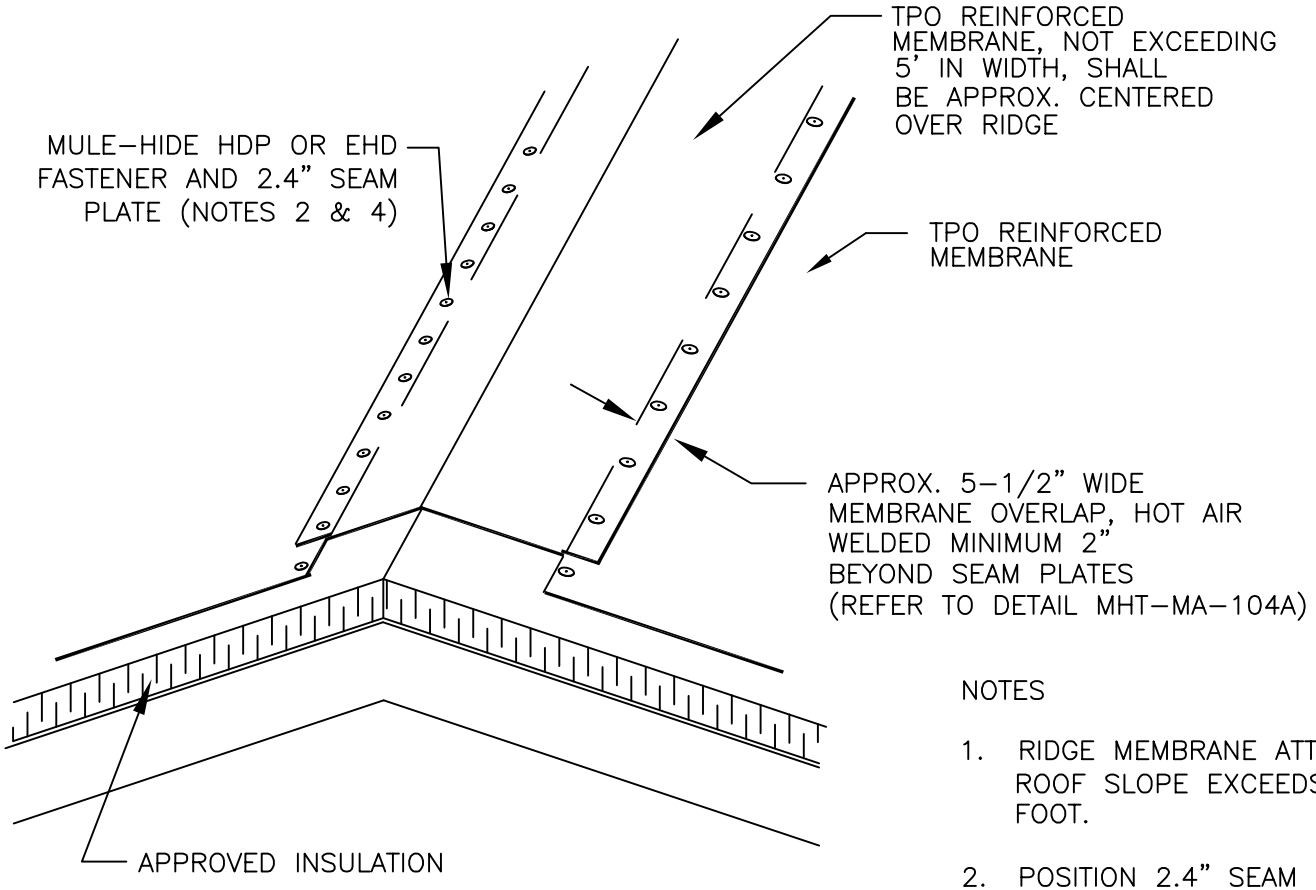

NOTES

1. RIDGE MEMBRANE ATTACHMENT IS ONLY REQUIRED WHEN ROOF SLOPE EXCEEDS 1-1/2" TO ONE HORIZONTAL FOOT.
2. POSITION 2.4" SEAM PLATES 1/2" MINIMUM TO 1" MAXIMUM FROM THE EDGE OF THE DECK MEMBRANE.
3. APPROXIMATELY 1/8" DIAMETER BEAD OF CUT-EDGE SEALANT IS REQUIRED ON CUT EDGES OF TPO REINFORCED MEMBRANE.
4. REFER TO SPECIFICATION FOR ACCEPTABLE MULE-HIDE FASTENERS AND FASTENING DENSITY.

MULE-HIDE PRODUCTS CO., INC.	**RIDGE SHEET LAYOUT**	**DETAIL NO.:**
	SYSTEMS:	**MHT-MA-602A**
	MECHANICALLY ATTACHED	REVISION DATE: 10/2013

®

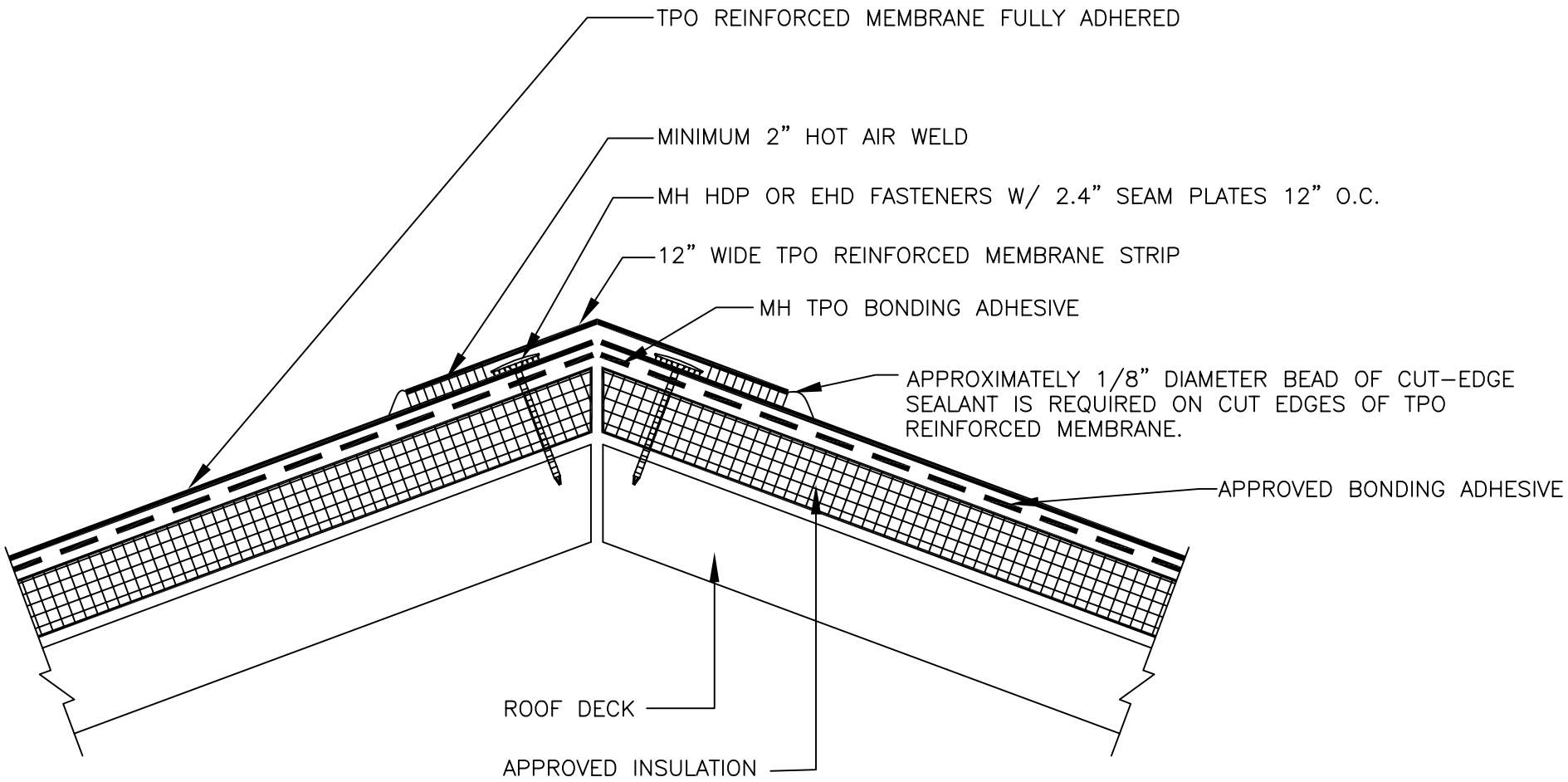

NOTES:

MEMBRANE FASTENER SPACING NOT TO EXCEED 12" O.C.

MULE-HIDE PRODUCTS CO., INC.	**RIDGE FLASHING**	**DETAIL NO.:**
	SYSTEMS:	**MHT-FA-602B**
	FULLY ADHERED	REVISION DATE: 10/2013

®

NOTES:

1. POSITION SEAM PLATES 1/2" TO 1" FROM EDGE OF DECK MEMBRANE.

2. APPROXIMATELY 1/8" DIAMETER BEAD OF CUT–EDGE SEALANT IS REQUIRED ON CUT EDGES OF TPO REINFORCED MEMBRANE.

NOTE:

THIS DETAIL ONLY INSTALLED WHEN CURB IS PARALLEL TO ROOF SLOPE.

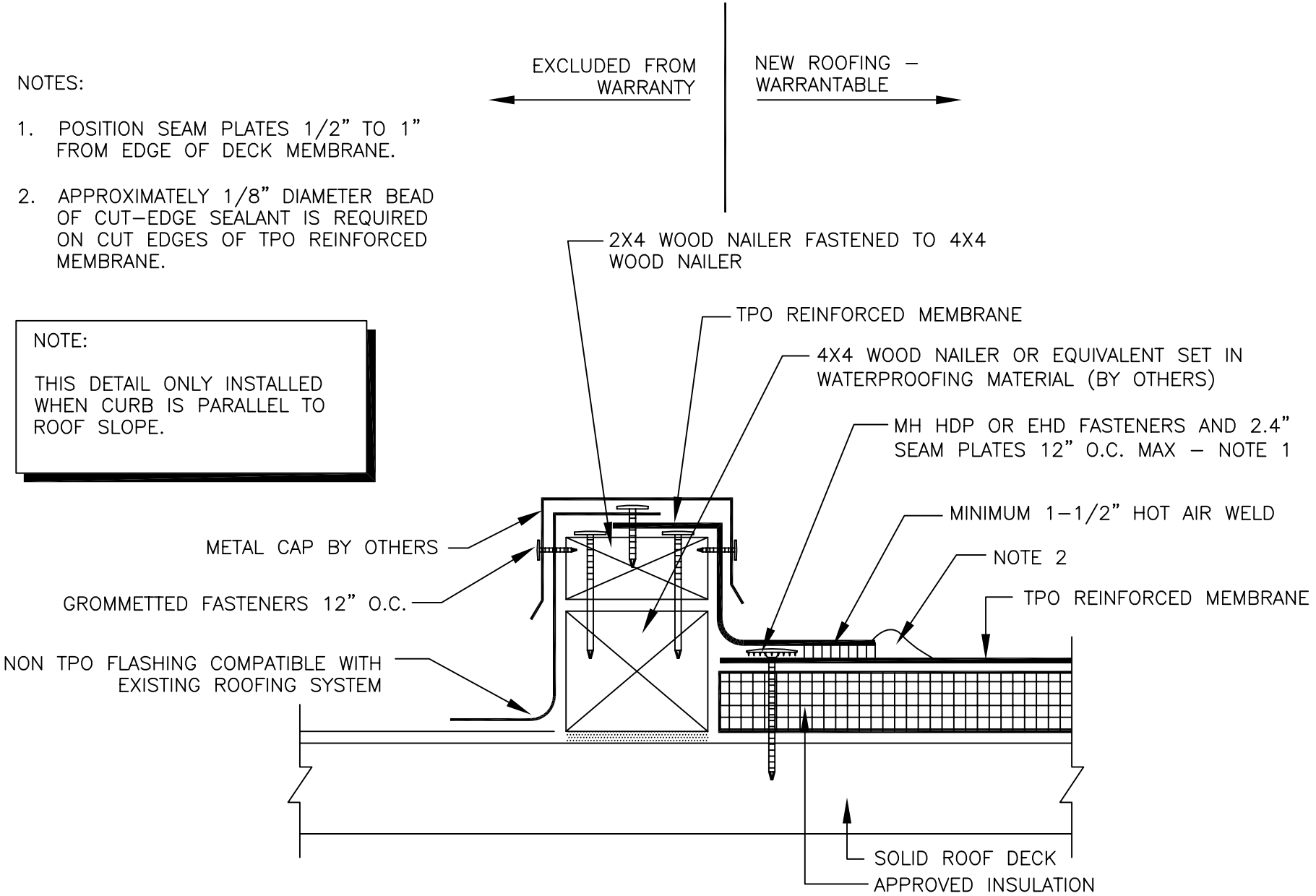

MULE-HIDE PRODUCTS CO., INC.	**TIE-IN TO SOLID DECK WITH CURB CURB PARALLEL TO SLOPE WITH TEAR OFF** **SYSTEMS:** **ALL TPO SYSTEMS**	**DETAIL NO.:** **MHT-UN-609** REVISION DATE: 10/2013

®

NOTES:

1. CLEAN AND PRIME AN 18" WIDE STRIP OF THE EXISTING ROOF SURFACE.

2. SET TPO REINFORCED MEMBRANE IN MULE-HIDE #420 MOD BIT ADHESIVE, BRUSH GRADE ON TOP OF EXISTING BUILT UP ROOFING.

3. USE ONE PLY OF MULE-HIDE SA BASE AND ONE PLY OF MULE-HIDE SA CAP SHEET TO PRIMED SURFACE OR SET 2 PLIES OF TYPE VI FIBERGLASS FELTS IN LAYERS OF MULE-HIDE #420 MOD BIT ADHESIVE, BRUSH GRADE. BOTTOM LAYER – 9" WIDE AND TOP LAYER – 12" WIDE (MIN).

4. COAT SURFACE WITH MULE-HIDE #102 FIBRATED ROOF COATING.

5. APPROXIMATELY 1/8" DIAMETER BEAD OF CUT-EDGE SEALANT IS REQUIRED ON CUT EDGES OF TPO REINFORCED MEMBRANE.

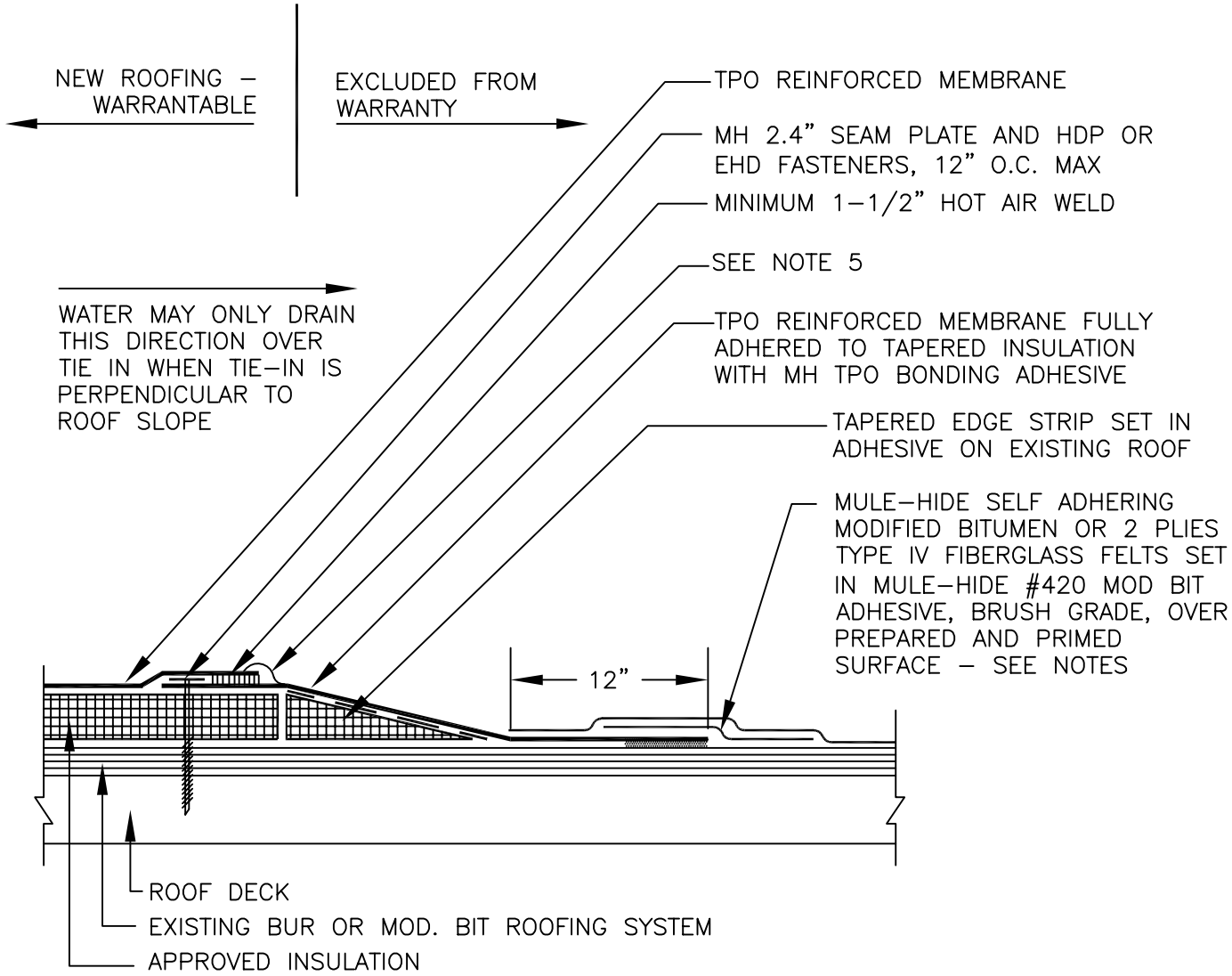

MULE-HIDE PRODUCTS CO., INC.	**TIE-IN TO EXISTING BUR / MOD BIT ROOF RECOVER SITUATION** **SYSTEMS:** **ALL TPO SYSTEMS**	**DETAIL NO.:** **MHT-UN-610A** REVISION DATE: 10/2013

®

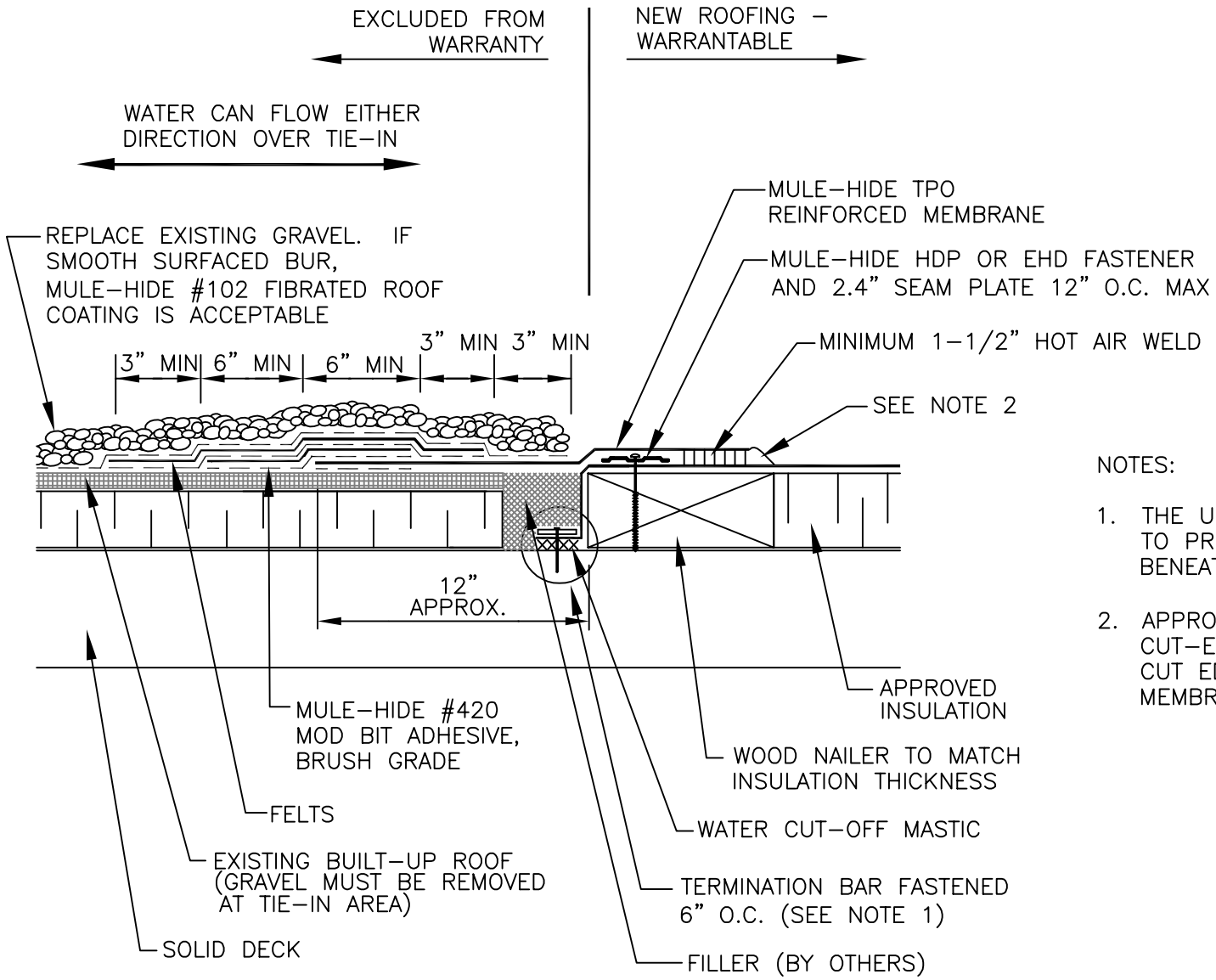

NOTES:

1. THE USE OF THE TERMINATION BAR IS TO PREVENT MIGRATION OF WATER BENEATH THE TPO ROOFING SYSTEM.
2. APPROXIMATELY 1/8" DIAMETER BEAD OF CUT–EDGE SEALANT IS REQUIRED ON CUT EDGES OF TPO REINFORCED MEMBRANE.

MULE-HIDE PRODUCTS CO., INC.	**TIE-IN EXISTING BUR OR MOD. BIT.**	**DETAIL NO.:**
	SYSTEMS:	**MHT-UN-610B**
	ALL TPO SYSTEMS	REVISION DATE: 10/2013

®

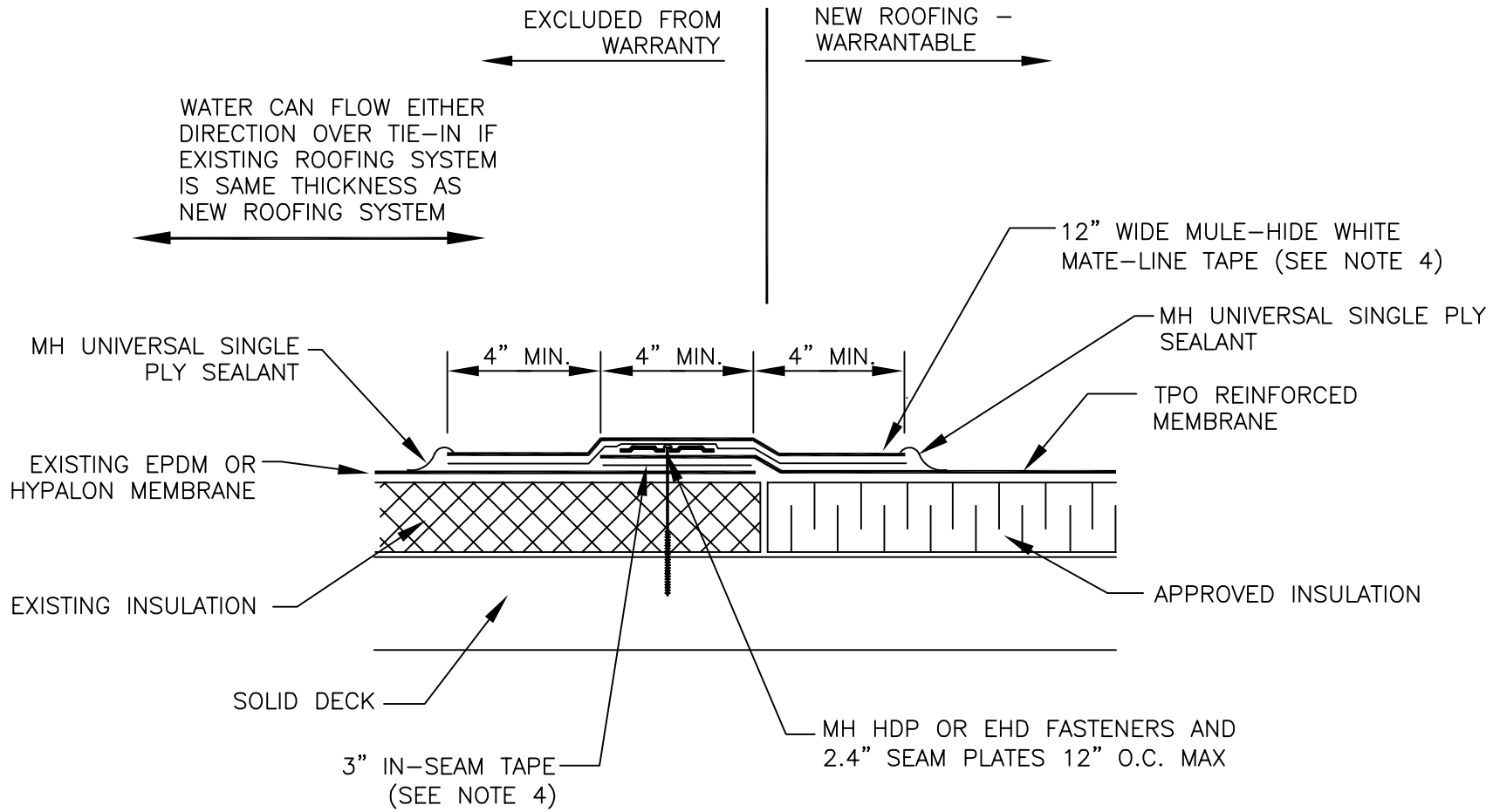

NOTES:

1. REFER TO SPECIFICATION FOR ACCEPTABLE MULE–HIDE FASTENERS AND PLATES.
2. REFER TO MULE–HIDE'S EPDM SPECIFICATIONS FOR SURFACE PREPARATION PROCEDURES FOR EXISTING MEMBRANE.
3. PRIOR TO SEAMING APPLICATION, USE WEATHERED MEMBRANE CLEANER TO PREPARE SURFACES OF TPO AND CLEANED EPDM OR HYPALON MEMBRANES.
4. MULE–HIDE TAPE PRIMER MUST BE USED TO PREPARE MEMBRANE SURFACES PRIOR TO APPLYING MULE–HIDE WHITE MATE–LINE TAPE, IN–SEAM TAPE, AND UNIVERSAL SINGLE PLY SEALANT.

MULE-HIDE PRODUCTS CO., INC.	**TIE-IN TO EXISTING EPDM OR HYPALON TEAR-OFF SITUATION** **SYSTEMS:** **ALL TPO SYSTEMS**	**DETAIL NO.:** **MHT-UN-610C** REVISION DATE: 10/2013

®

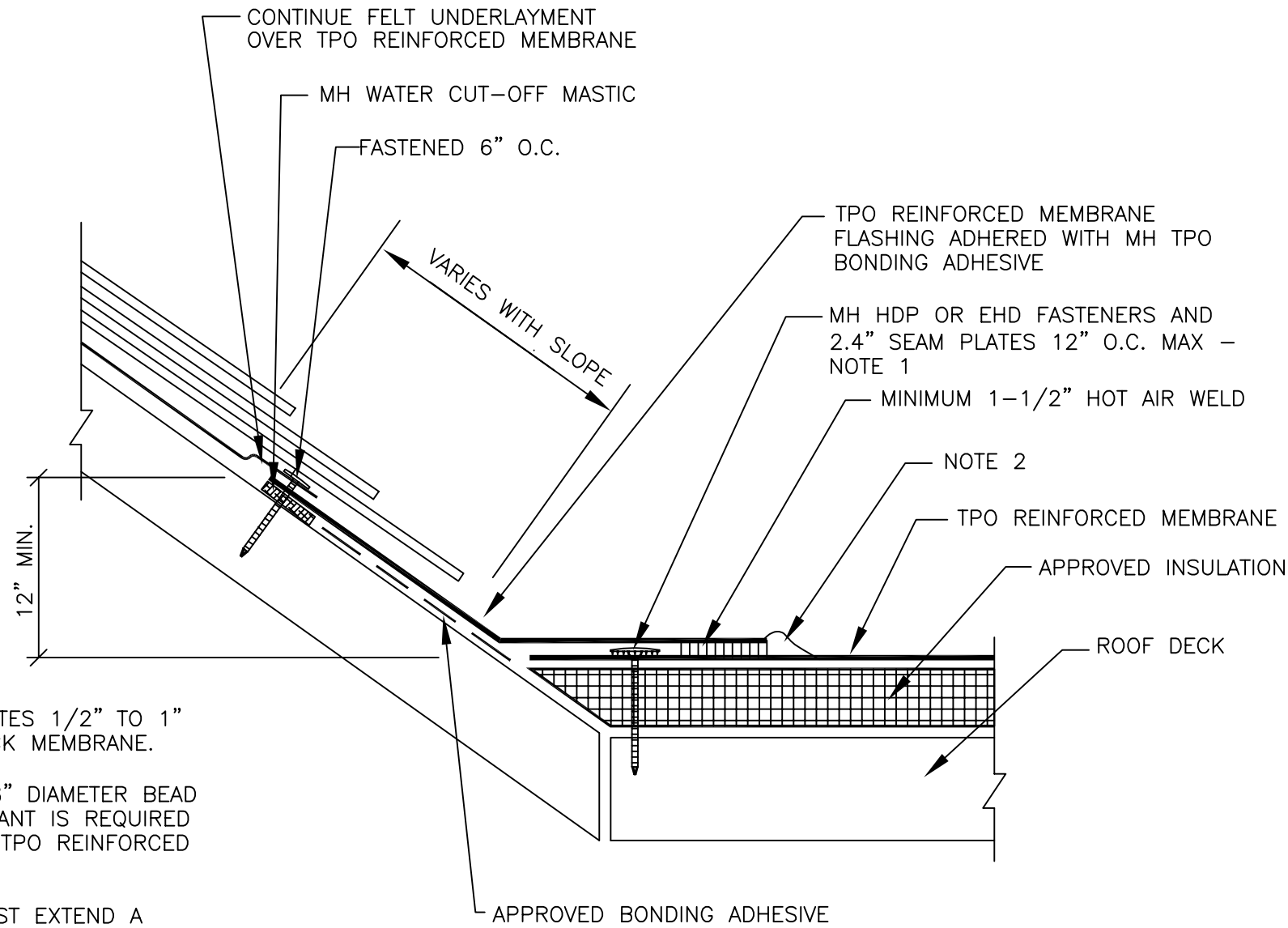

NOTES:

1. POSITION SEAM PLATES 1/2" TO 1" FROM EDGE OF DECK MEMBRANE.
2. APPROXIMATELY 1/8" DIAMETER BEAD OF CUT–EDGE SEALANT IS REQUIRED ON CUT EDGES OF TPO REINFORCED MEMBRANE.
3. TPO MEMBRANE MUST EXTEND A MINIMUM OF 12" VERTICALLY UP THE SLOPE AND UNDER A MINIMUM OF 3 COURSES OF SHINGLES.

MULE-HIDE PRODUCTS CO., INC.	**TIE-IN SHINGLE ROOF**	**DETAIL NO.:**
	SYSTEMS:	**MHT-UN-611A**
	ALL TPO SYSTEMS	REVISION DATE: 10/2013

®

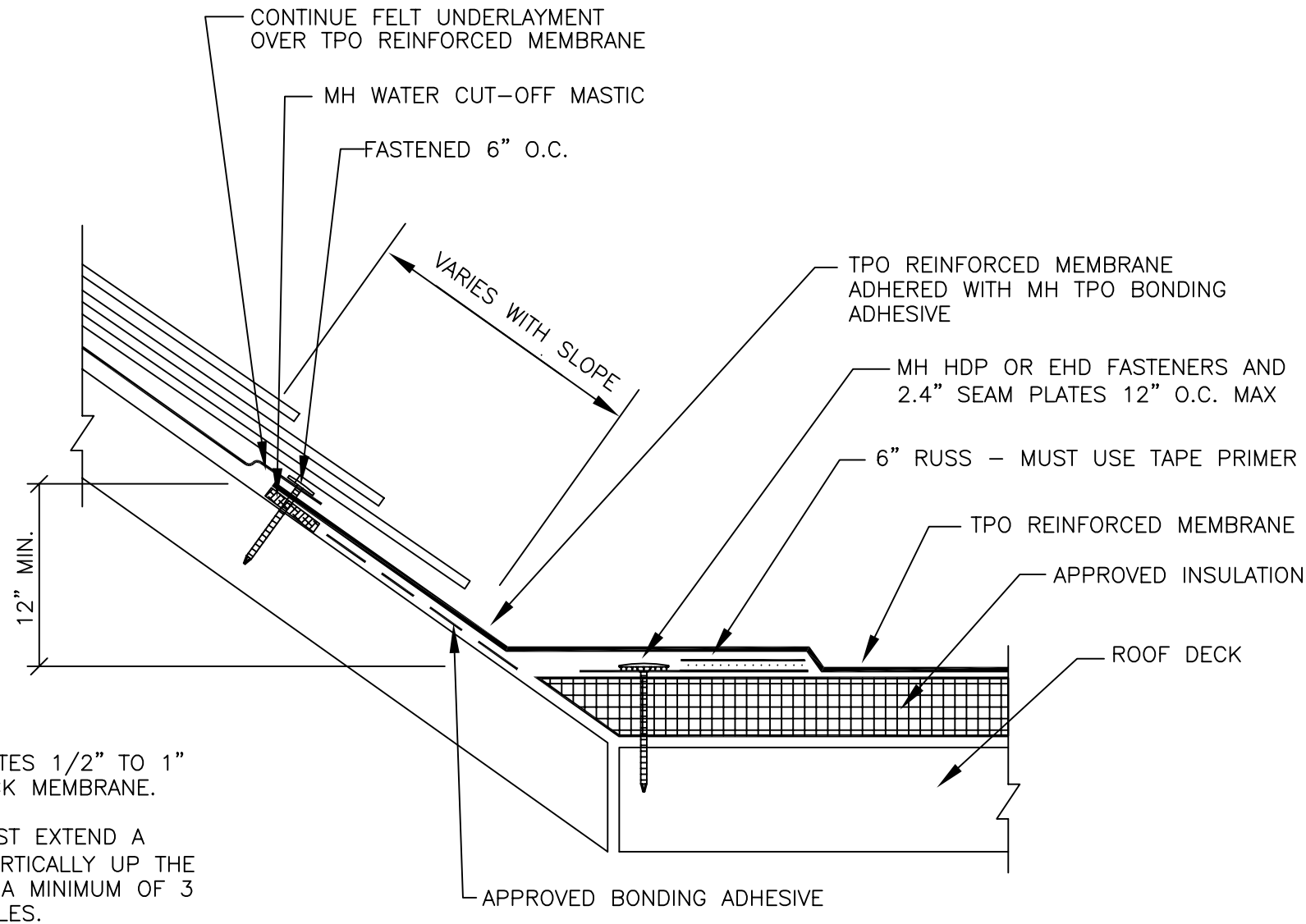

NOTES:

1. POSITION SEAM PLATES 1/2" TO 1" FROM EDGE OF DECK MEMBRANE.
2. TPO MEMBRANE MUST EXTEND A MINIMUM OF 12" VERTICALLY UP THE SLOPE AND UNDER A MINIMUM OF 3 COURSES OF SHINGLES.
3. RUSS PRODUCTS CANNOT BE USED ON FLEECEBACK OR SELF ADHERING MEMBRANES.

MULE-HIDE PRODUCTS CO., INC.	**TIE-IN SHINGLE ROOF 6" RUSS**	**DETAIL NO.:**
	SYSTEMS:	**MHT-UN-611B**
	ALL TPO SYSTEMS	REVISION DATE: 10/2013

®

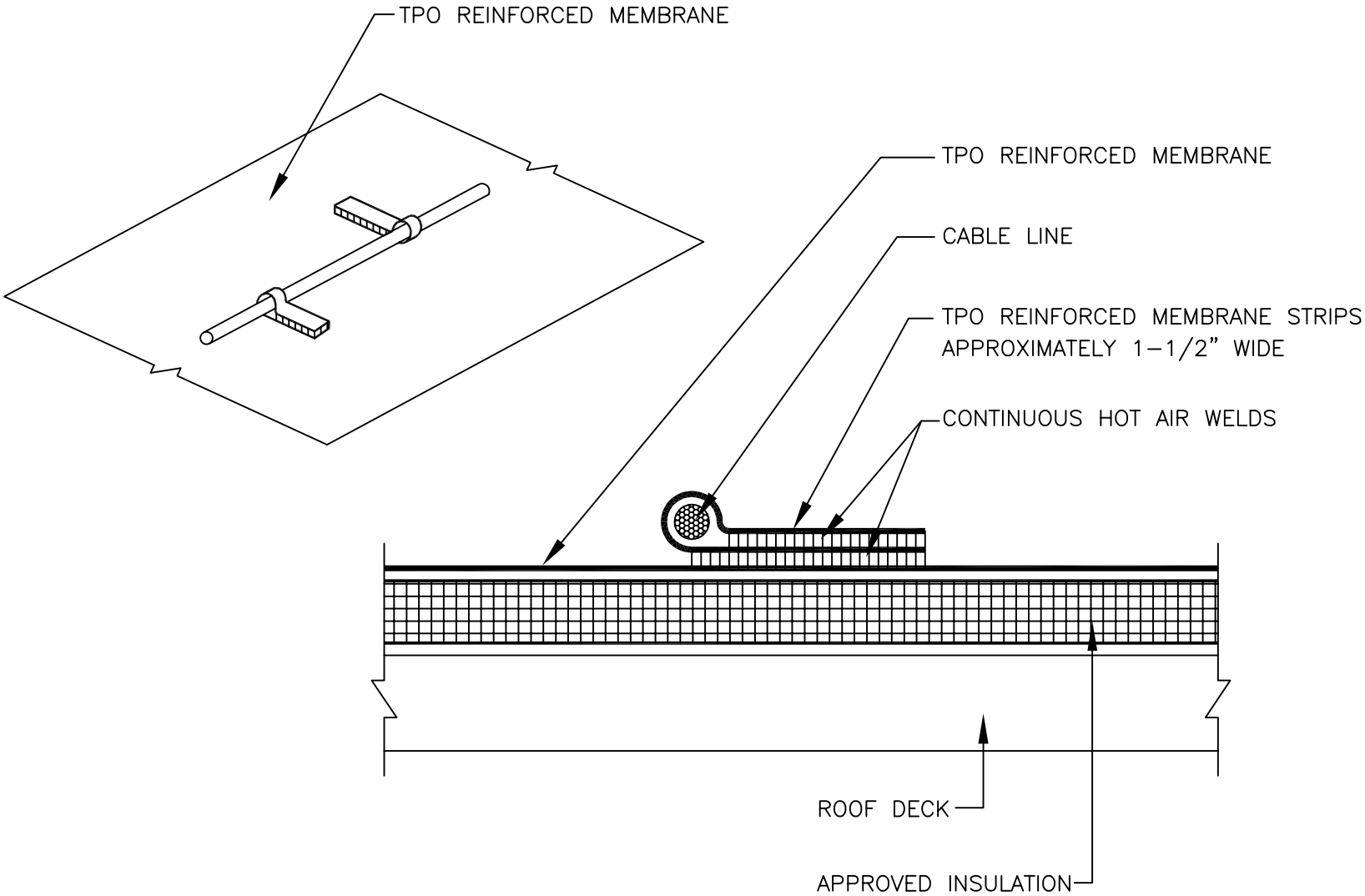

MULE-HIDE PRODUCTS CO., INC.	**LIGHTNING CABLE STRAP**	**DETAIL NO.:**
	SYSTEMS:	**MHT-UN-621**
	ALL TPO SYSTEMS	REVISION DATE: 10/2013

®

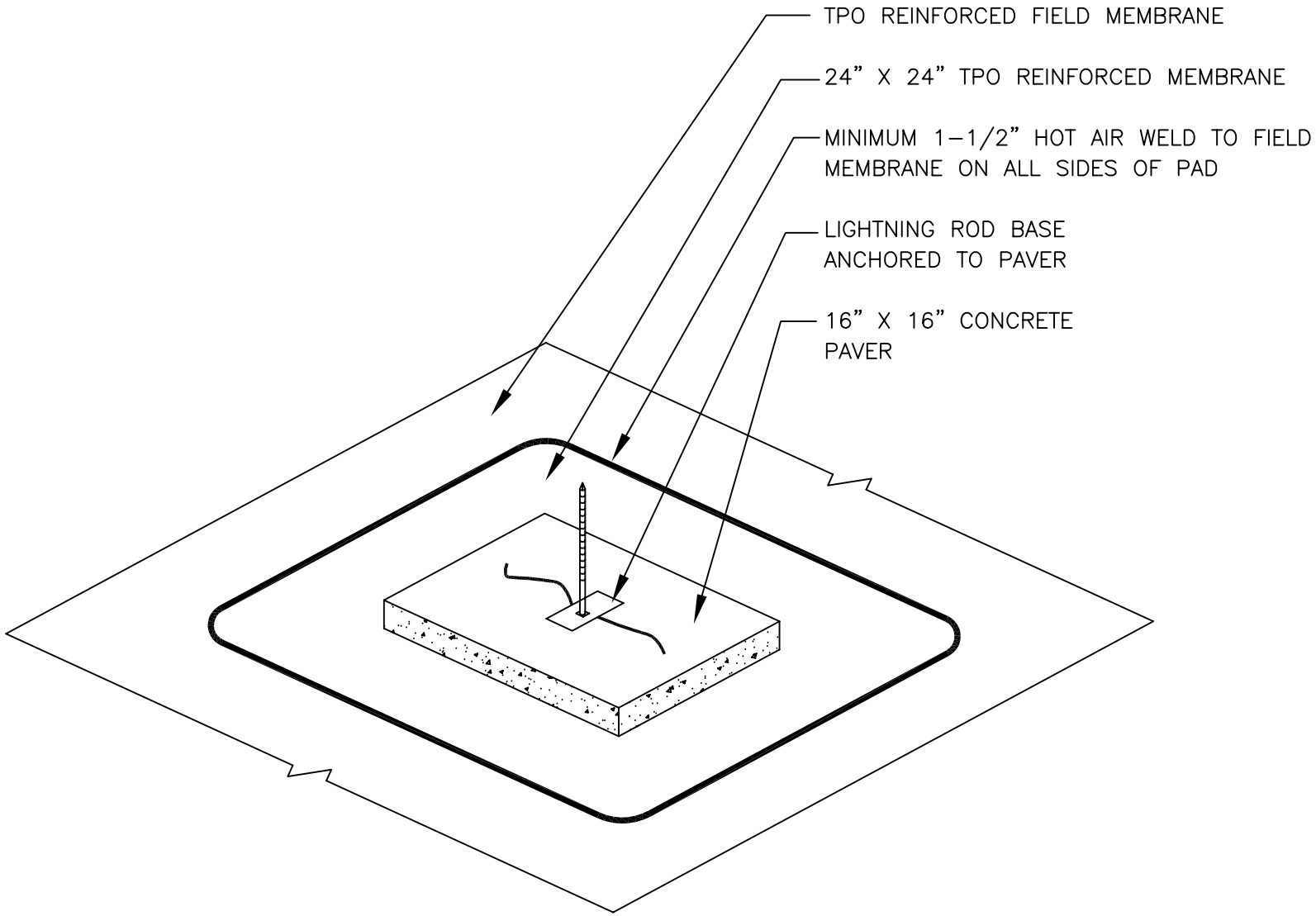

MULE-HIDE PRODUCTS CO., INC.	**LIGHTNING ROD BASE**	**DETAIL NO.:**
	SYSTEMS:	**MHT-UN-622A**
	ALL TPO SYSTEMS	REVISION DATE: 10/2013

®

NOTES:

1. CLEAN EXPOSED MEMBRANE WITH WEATHERED MEMBRANE CLEANER.

2. APPLY MULE–HIDE TAPE PRIMER TO THE MEMBRANE AND LIGHTNING ROD BASE. ALLOW TO DRY UNTIL IT IS TACK FREE.

3. INSTALL A SECTION OF WHITE IN–SEAM TAPE (APPROXIMATELY THE SIZE OF THE METAL BASE) TO THE MEMBRANE SURFACE. LEAVE THE RELEASE FILM IN PLACE AND ROLL TAPE FROM THE CENTER TO THE OUTER EDGES.

4. REMOVE RELEASE FILM AND CAREFULLY PLACE METAL BASE OVER THE IN–SEAM TAPE.

5. APPLY TAPE PRIMER TO TPO MEMBRANE WHERE UNIVERSIAL SINGLE PLY SEALANT IS TO BE APPLIED. ALLOW TO DRY UNTIL TACK FREE, SEAL ALL EDGES AND ANY EXPOSED AREAS OF TAPE (AT PERFORATED BASE) WITH MULE–HIDE UNIVERSAL SINGLE PLY SEALANT.

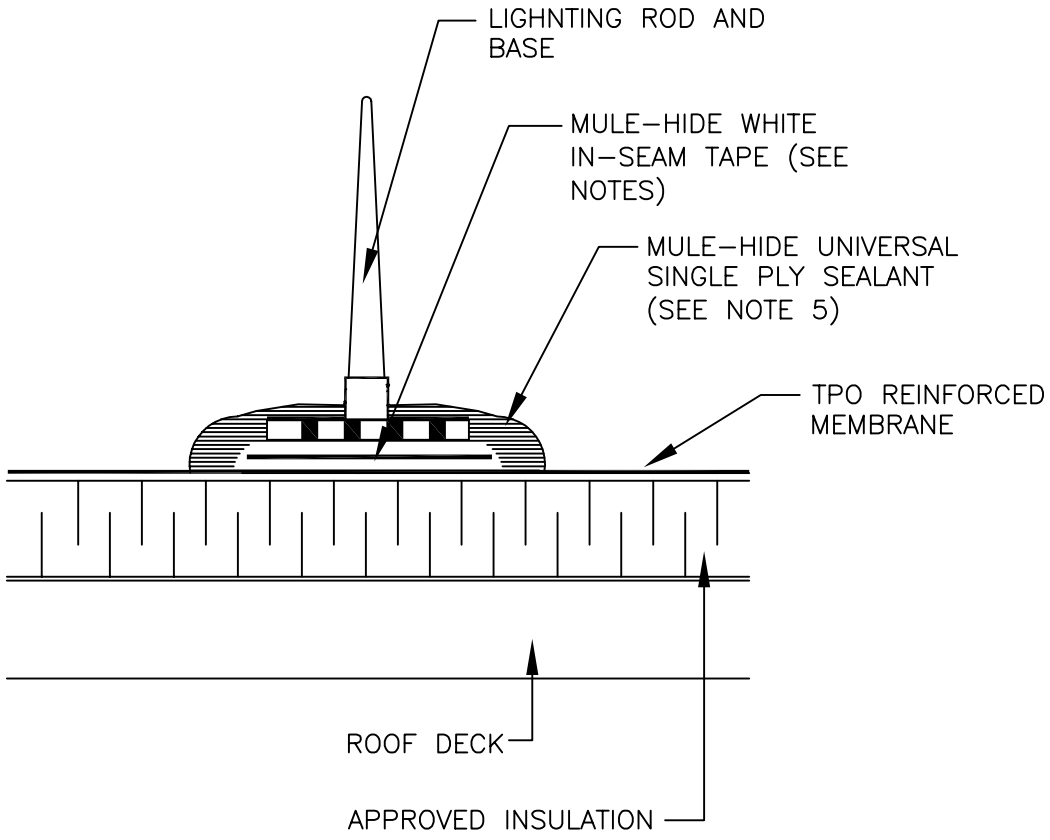

MULE-HIDE PRODUCTS CO., INC.	**LIGHTNING ROD DETAIL**	**DETAIL NO.:**
	SYSTEMS:	**MHT-UN-622B**
	ALL TPO SYSTEMS	REVISION DATE: 10/2013

®

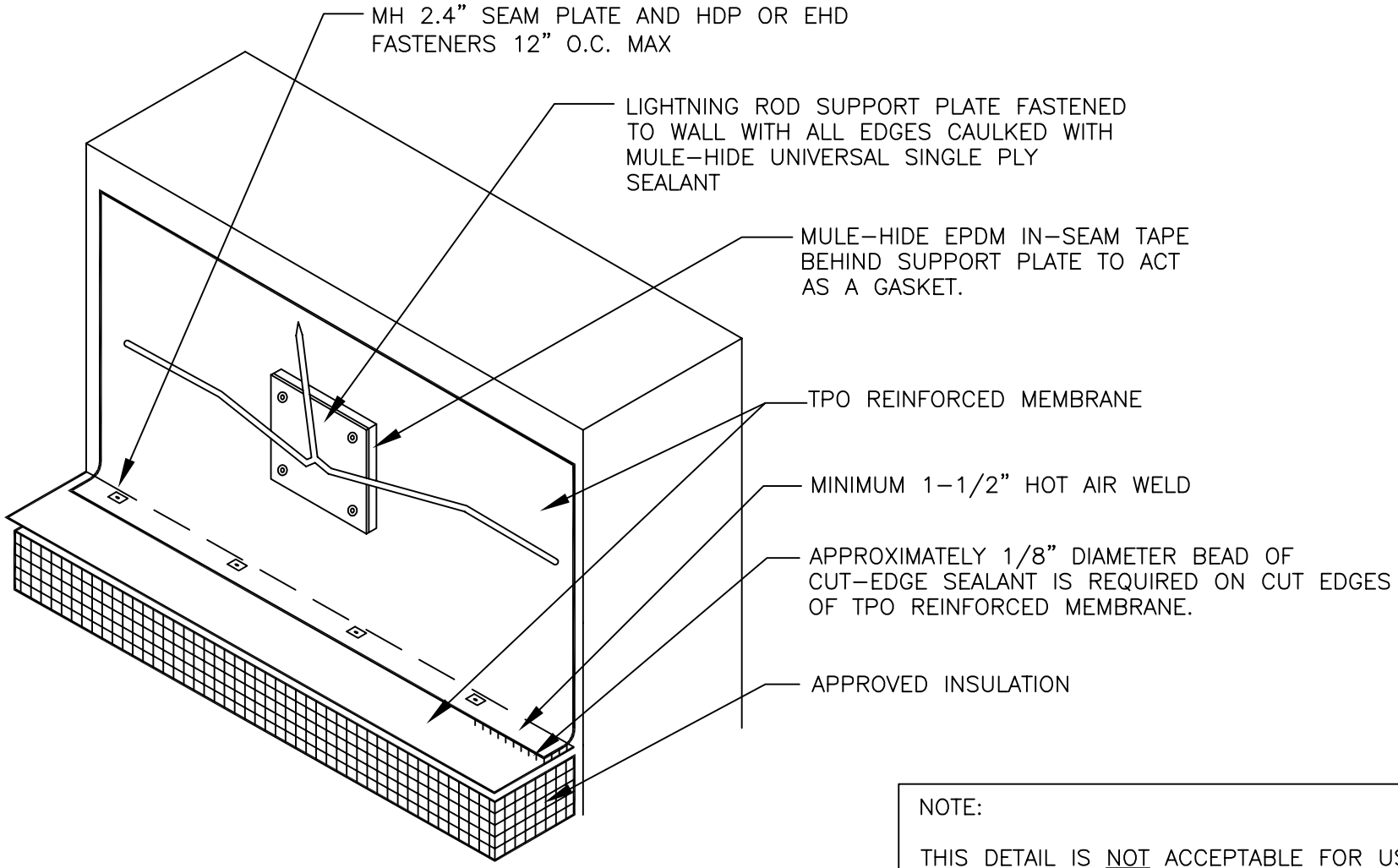

NOTE:

THIS DETAIL IS NOT ACCEPTABLE FOR USE IN A 20-YEAR WARRANTED SYSTEM

MULE-HIDE PRODUCTS CO., INC.	**LIGHTNING ROD WALL SUPPORT**	**DETAIL NO.:**
	SYSTEMS:	**MHT-UN-623**
	ALL TPO SYSTEMS	REVISION DATE: 10/2013

®

NOT FOR USE ON 20 YEAR WARRANTY PROJECTS.
TERMINATION MUST HAVE COMPRESSION SEAL
SEE ALL OTHER 624 DETAILS

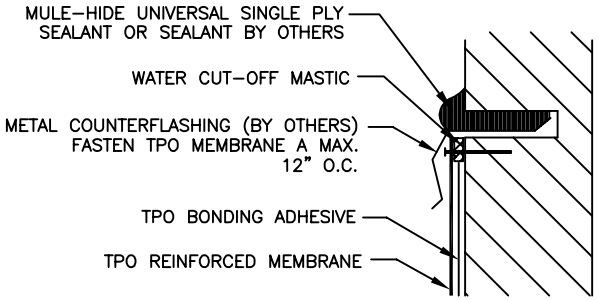

NOTES:

1. COUNTERFLASHING SHALL BE ELEVATED ABOVE PONDED WATER.
2. NOT FOR USE ON 20 YEAR WARRANTY PROJECTS (REFER TO DETAIL 624–B).
3. BONDING ADHESIVE IS NOT REQUIRED WHEN FLASHING HEIGHT IS 12" OR LESS. FASTENERS MUST BE SPACED A MAXIMUM 12" O.C.
4. IF THE SHEETMETAL IS TO BE INCLUDED IN THE WARRANTY, CONTRACTOR MUST USE MULE–HIDE METAL PRODUCTS. REFER TO DETAILS MHSM–6130, MHSM–6145, OR MHSM–6146.

624–A COUNTERFLASHING TERMINATION

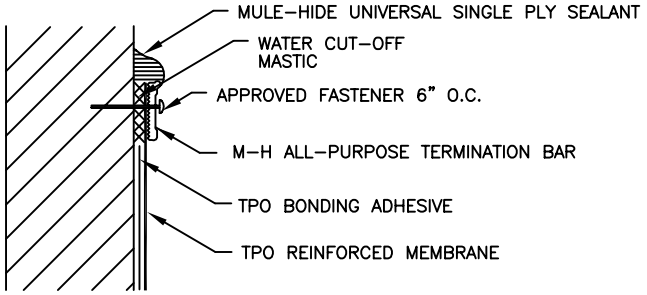

1. FOR USE ON 20 YEAR WARRANTY PROJECTS.
2. ALLOW 1/4" to 1/2" SPACING BETWEEN CONSECUTIVE LENGTHS OF TERMINATION BAR.
3. BONDING ADHESIVE IS NOT REQUIRED WHEN FLASHING IS 18" OR LESS.

624–C MECHANICAL TERMINATION

FOR USE ON 20 YEAR WARRANTY PROJECTS.
TERMINATION BAR IS NOT REQUIRED ON 10 YEAR WARRANTY PROJECTS (REFER TO DETAIL 624–A)

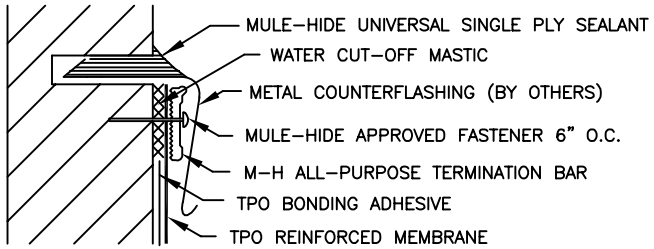

1. APPLY ON HARD SMOOTH SURFACE ONLY; NOT FOR USE ON WOOD.
2. DO NOT WRAP COMPRESSION TERMINATION AROUND CORNERS.
3. FASTENERS OF METAL BAR MUST PROVIDE CONSTANT COMPRESSION ON WATER CUT–OFF MASTIC.
4. BONDING ADHESIVE IS NOT REQUIRED WHEN FLASHING IS 18" OR LESS.
5. IF THE SHEETMETAL IS TO BE INCLUDED IN THE WARRANTY, CONTRACTOR MUST USE MULE–HIDE METAL PRODUCTS. REFER TO DETAILS MHSM–6130, MHSM–6145, OR MHSM–6146.

624–B MECHANICAL TERMINATION

FOR USE ON 20 YEAR WARRANTY PROJECTS.

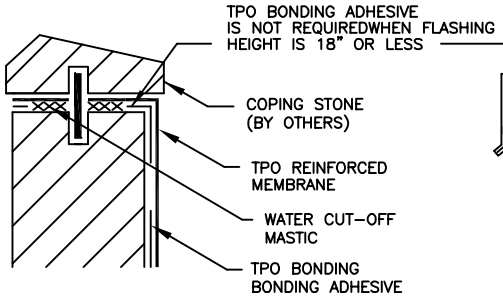

624–D COPING STONE TERMINATION

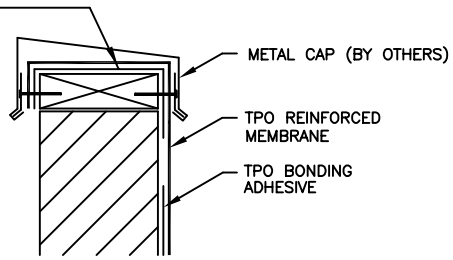

624–E CAP FLASHING TERMINATION

NOTES:

IF THE SHEETMETAL IS TO BE INCLUDED IN THE WARRANTY, CONTRACTOR MUST USE MULE–HIDE METAL PRODUCTS. REFER TO DETAILS MHSM–6050, MHSM–6052, MHSM–6054A & B, OR MHSM–6056.

MULE-HIDE PRODUCTS CO., INC.

TERMINATION DETAILS

SYSTEMS:

ALL TPO SYSTEMS

DETAIL NO.:

MHT-UN-624

REVISION DATE: 10/2013

®

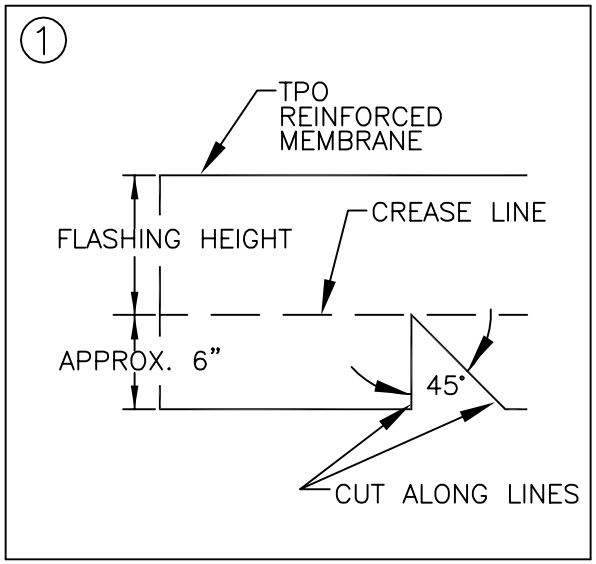

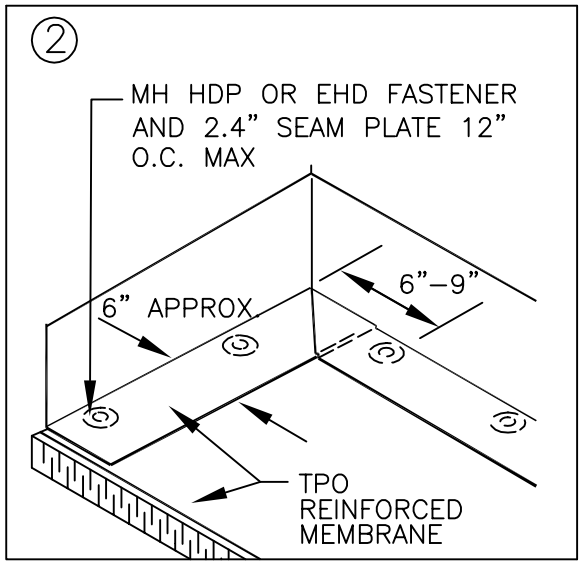

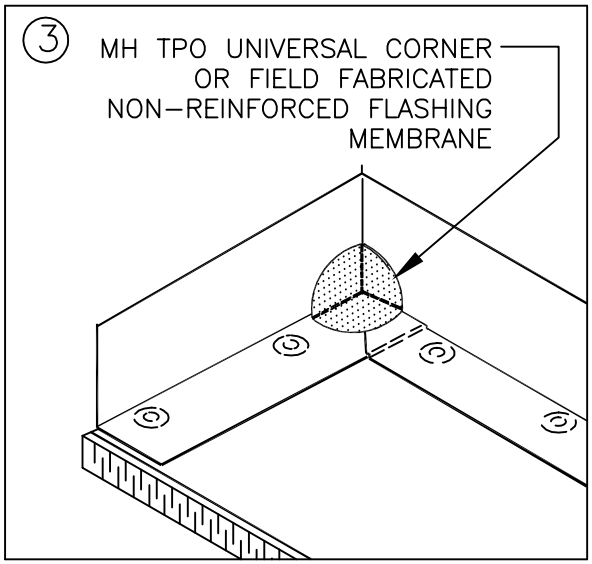

NOTES:

1. BEGIN INSTALLATION OF 2.4" SEAM PLATES 6" TO 9" FROM THE CORNER.

2. POSITION 2.4" SEAM PLATES ½" TO 1" FROM EDGE OF TPO REINFORCED MEMBRANE.

3. APPROXIMATELY ⅛" DIAMETER BEAD OF CUT–EDGE SEALANT IS REQUIRED ON CUT EDGES OF TPO REINFORCED MEMBRANE.

MULE-HIDE PRODUCTS CO., INC.	**INSIDE CORNER**	**DETAIL NO.:**
	SYSTEMS:	**MHT-UN-640A**
	ALL TPO SYSTEMS	REVISION DATE: 10/2013

®

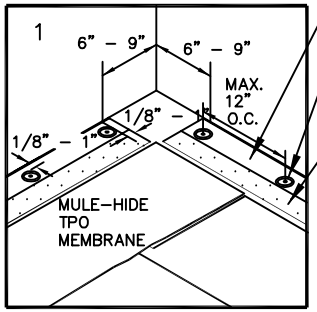

6" WIDE PRESSURE–SENSITIVE TPO RUSS STRIP

M–H 2.4" SEAM PLATE AND HDP OR EHD FASTENER MAX. 12" O.C.

PRE–APPLIED PRESSURE–SENSITIVE TAPE(RUSS STRIP)

INSTALL PRESSURE–SENSITIVE RUSS AND FASTEN TO ROOF DECK WITH APPROVED MULE–HIDE FASTENERS AND SEAM PLATES, MAX. 12" O.C.

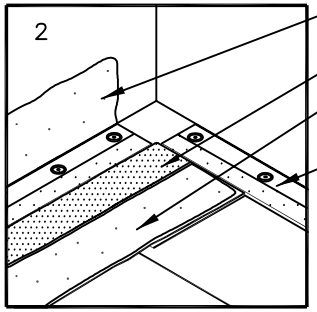

TPO BONDING ADHESIVE

TAPE PRIMER

TPO BONDING ADHESIVE

6" WIDE PRESSURE–SENSITIVE TPO RUSS STRIP

FOR RUSS SECUREMENT, USE HDP OR EHD FASTENERS & SEAM PLATES SPACED A MAXIMUM OF 12"O.C.

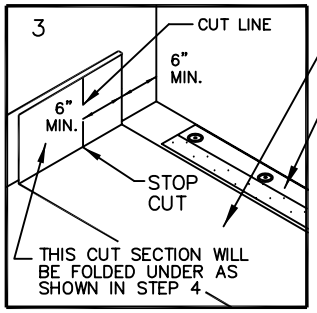

TPO REINFORCED MEMBRANE

6" WIDE PRESSURE–SENSITIVE TPO RUSS STRIP

THE CUT SECTION OF VERTICAL MEMBRANE WILL BE FOLDED UNDER THE FIELD MEMBRANE AS SHOWN IN STEP 4.

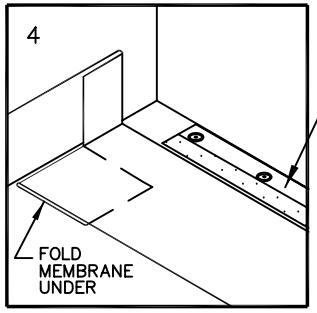

6" WIDE PRESSURE–SENSITIVE TPO RUSS STRIP

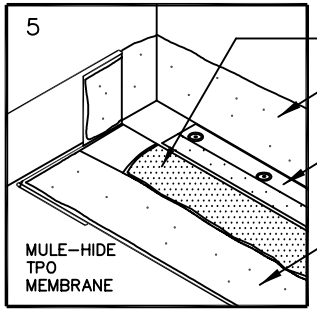

TAPE PRIMER

TPO BONDING ADHESIVE

6" WIDE PRESSURE–SENSITIVE TPO RUSS STRIP

TPO BONDING ADHESIVE

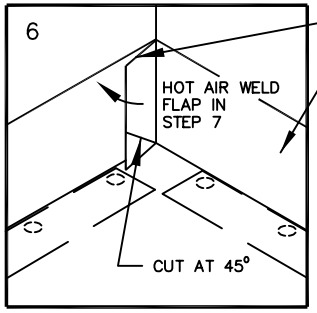

1–1/2" WIDE MIN.

TPO REINFORCED MEMBRANE

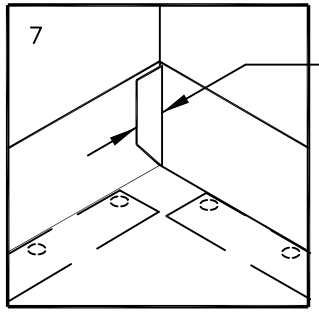

MINIMUM 1–1/2" HOT AIR WELD

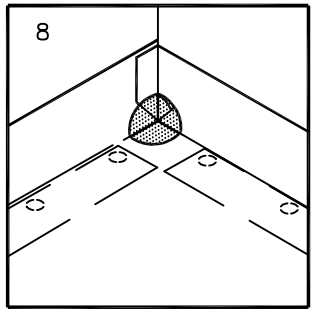

APPLY INSIDE CORNER FLASHING IN ACCORDANCE WITH MULE–HIDE DETAIL MHT–UN–640A OR MHT–UN–640C

APPLY CUT–EDGE SEALANT TO CUT EDGES OF TPO REINFORCED MEMBRANE.

NOTE:

RUSS PRODUCTS CANNOT BE USED WITH FLEECEBACK OR SELF ADHERING MEMBRANES.

MULE-HIDE PRODUCTS CO., INC.	**INSIDE CORNER USING RUSS**	**DETAIL NO.:**
	SYSTEMS:	**MHT-UN-640B**
	ALL TPO SYSTEMS	REVISION DATE: 10/2013

®

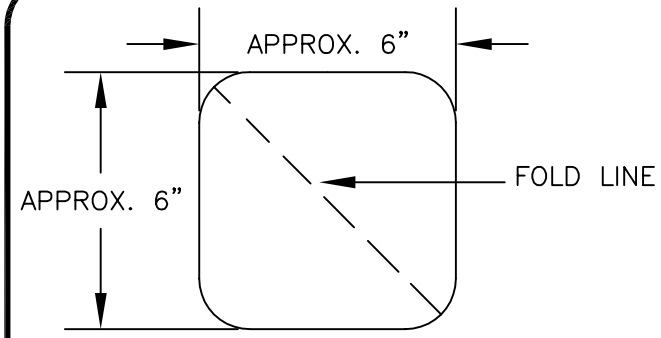

CUT A SECTION OF TPO NON–REINFORCED FLASHING WITH ROUNDED CORNERS OR USE UNIVERSAL CORNER; FOLD ALONG LINE AS INDICATED.

1

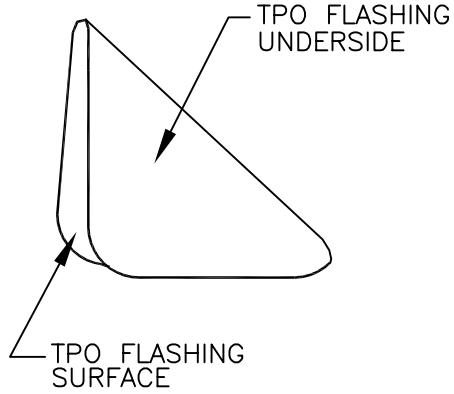

2

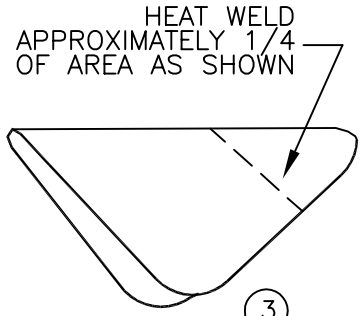

3

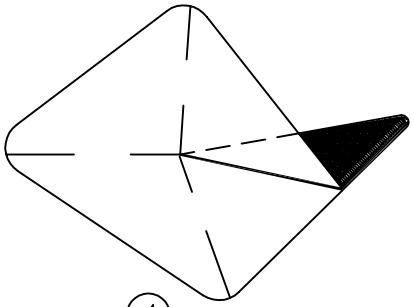

4

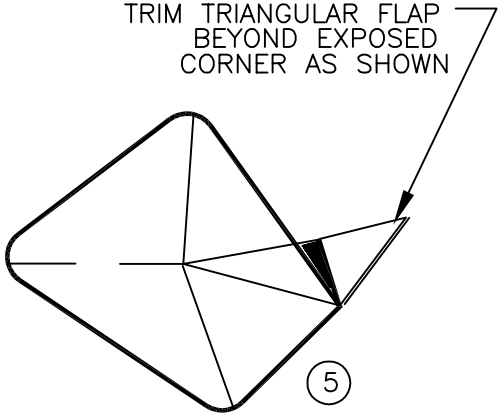

5

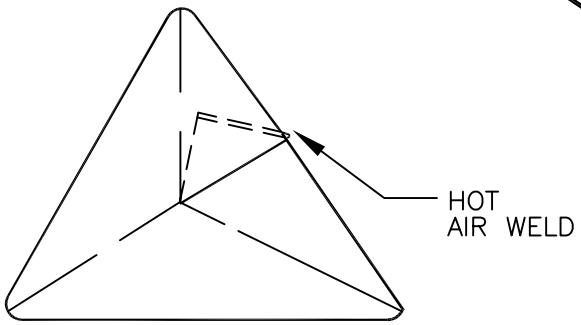

6 POSITION AND HEAT WELD CORNER IN PLACE AS SHOWN

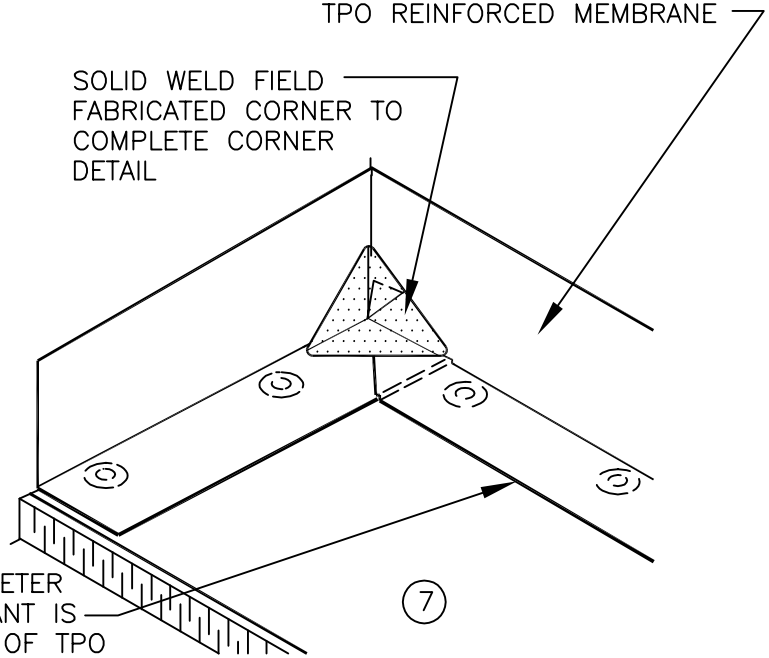

7

MULE-HIDE PRODUCTS CO., INC.	**FIELD FABRICATED INSIDE CORNER**	**DETAIL NO.:**
	SYSTEMS:	**MHT-UN-640C**
	ALL TPO SYSTEMS	REVISION DATE: 10/2013

®

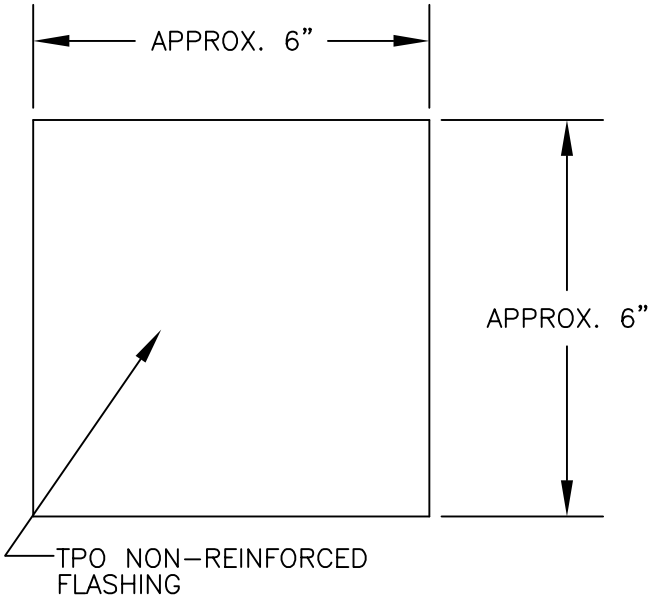

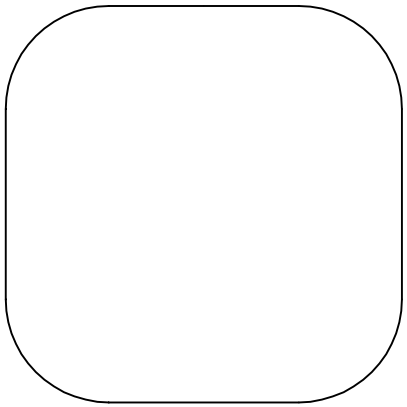

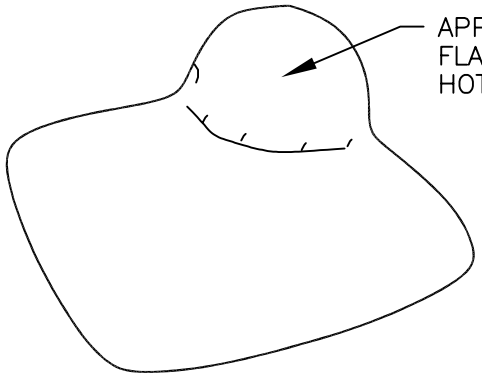

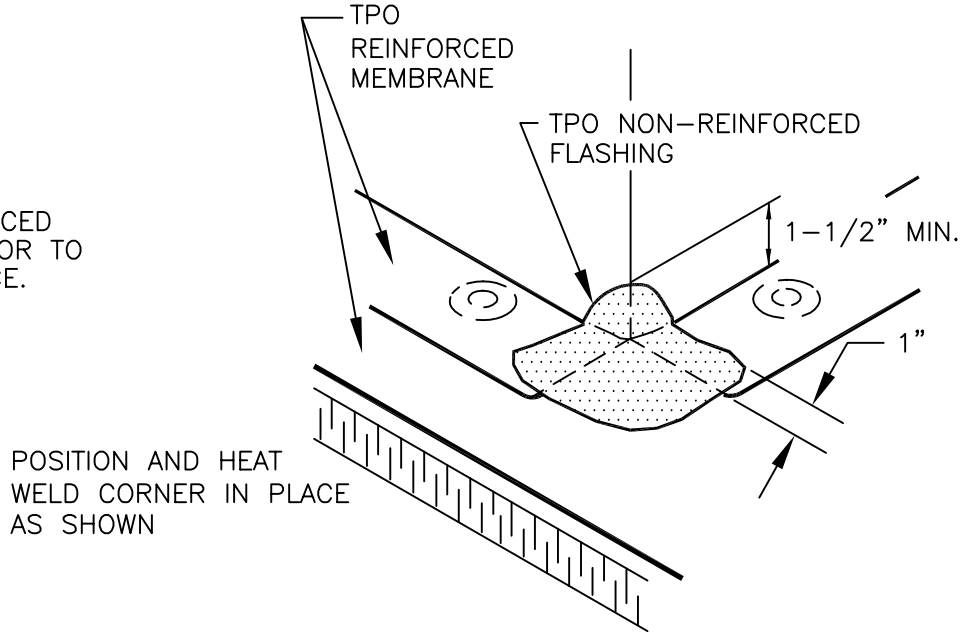

MULE-HIDE PRODUCTS CO., INC.	**FIELD FABRICATED OUTSIDE CORNER**	**DETAIL NO.:**
	SYSTEMS:	**MHT-UN-641A**
	ALL TPO SYSTEMS	REVISION DATE: 10/2013

®

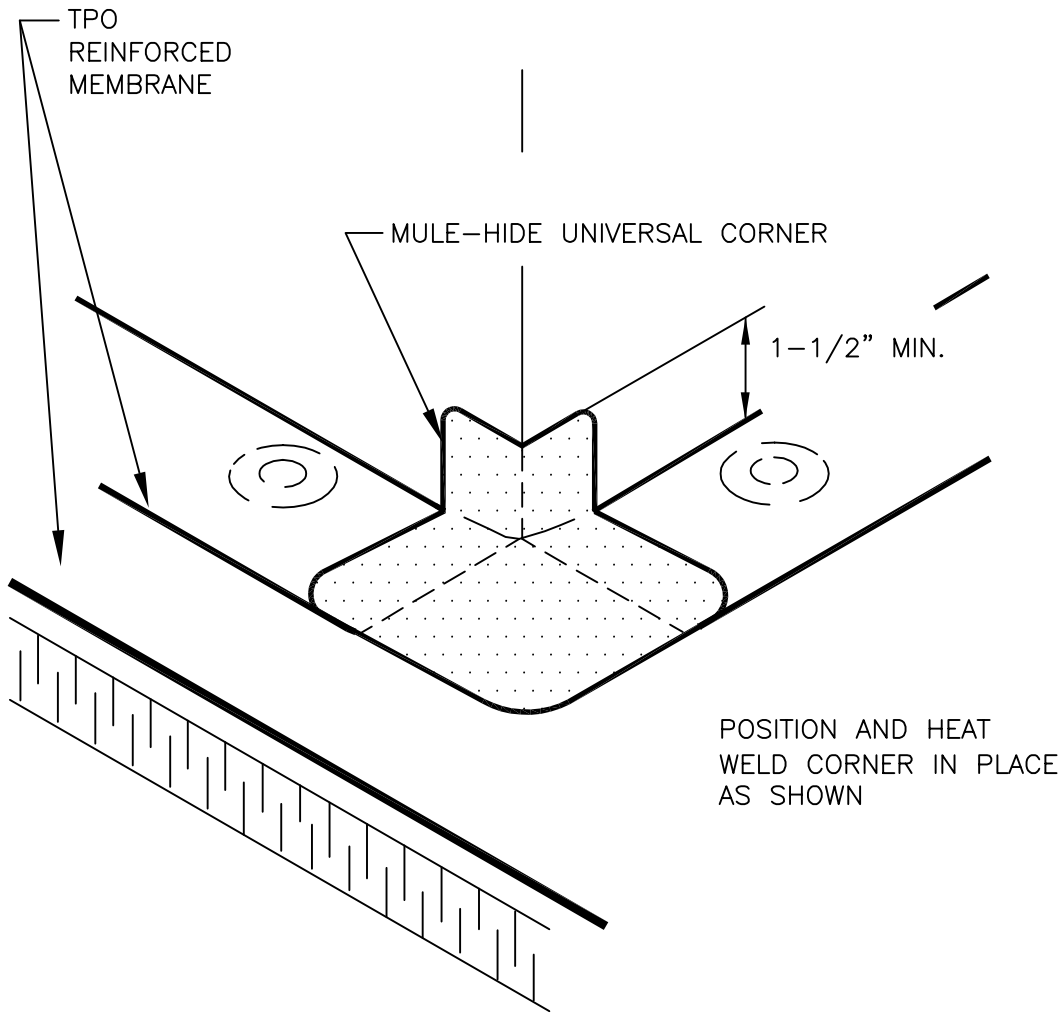

MULE-HIDE PRODUCTS CO., INC.	**TPO UNIVERSAL CORNER OUTSIDE CORNER**	**DETAIL NO.:**
	SYSTEMS:	**MHT-UN-641B**
	ALL TPO SYSTEMS	REVISION DATE: 10/2013

®

FASTENING PATTERNS FOR EXTRUDED POLYSTYRENE INSULATION
FOR USE DIRECTLY UNDER MECHANICALLY ATTACHED WHITE TPO
REINFORCED MEMBRANE ONLY

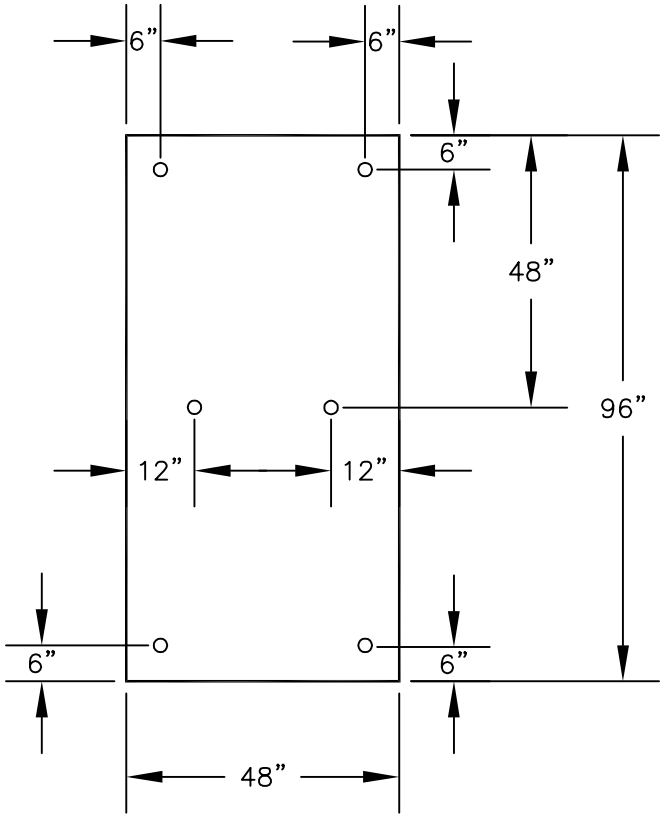

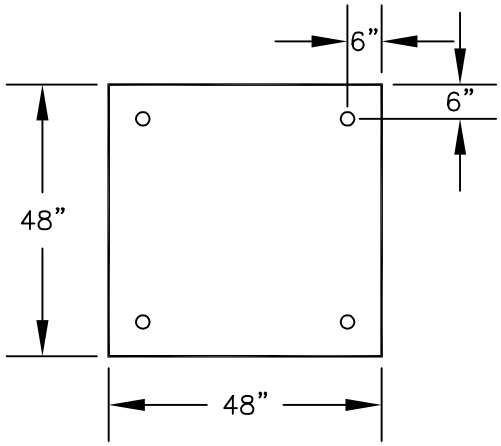

NOTES:

1. MULE–HIDE 3” METAL STRESS PLATES MUST BE USED WITH MULE–HIDE FASTENERS FOR INSULATION ATTACHMENT.

2. FASTENER TOLERANCE SHALL BE ±1 INCH.

MULE-HIDE PRODUCTS CO., INC.	**EXTRUDED POLYSTYRENE INSULATION ATTACHMENT FASTENING PATTERNS** **SYSTEMS:** **MECHANICALLY ATTACHED**	**DETAIL NO.:** **MHT-MA-700** REVISION DATE: 10/2013

®

2" OR THICKER POLYISOCYANURATE INSULATION ONLY

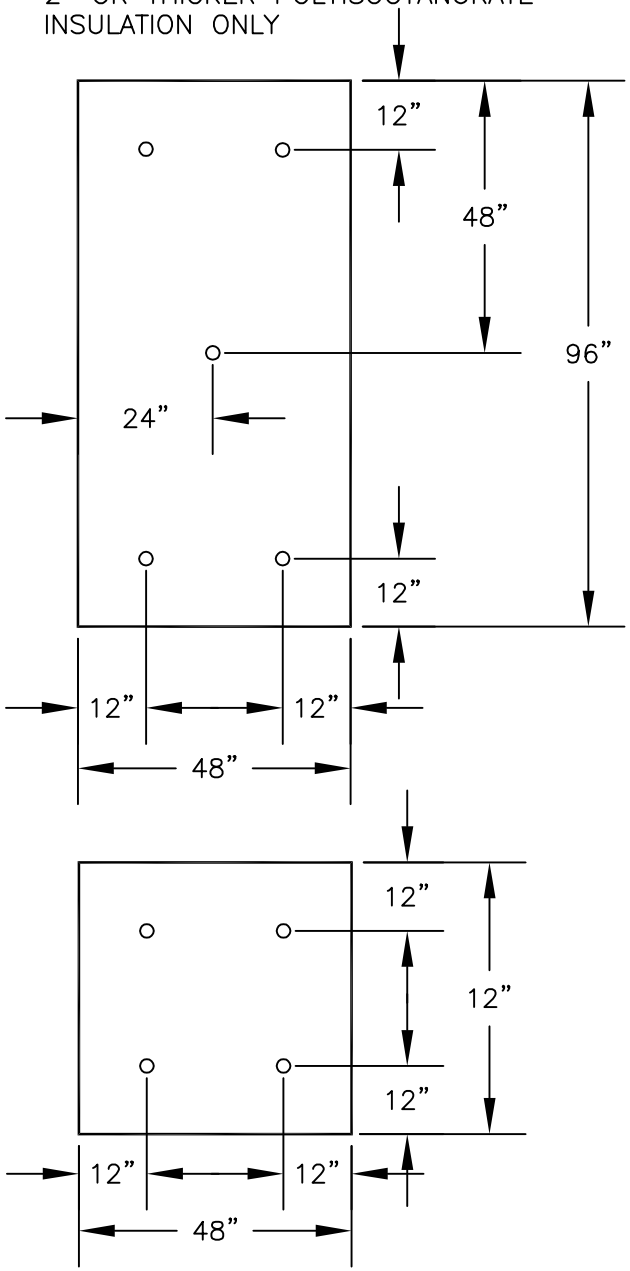

ALL OTHER INSULATIONS

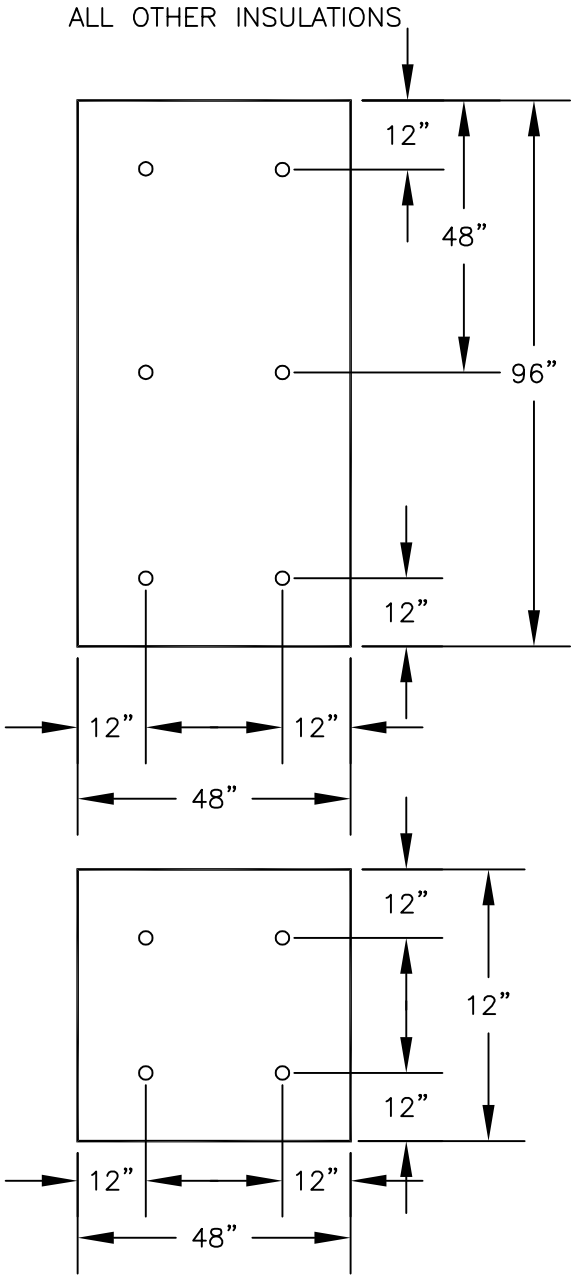

NOTES:

1. MULE–HIDE 3" METAL STRESS PLATES MUST BE USED WITH MULE–HIDE FASTENERS FOR INSULATION ATTACHMENT.

2. FASTENER TOLERANCE SHALL BE +1 INCH.

MULE-HIDE PRODUCTS CO., INC.	**INSULATION ATTACHMENT PATTERNS**	**DETAIL NO.:**
	SYSTEMS:	**MHT-MA-701**
	MECHANICALLY ATTACHED	REVISION DATE: 10/2013

®

NOTES:

1. 8 FASTENERS PER 4' X 8' BOARDS (1 FASTENER EVERY 4 SQUARE FEET) IN THE FIELD IS APPROVED FOR INSULATIONS 2" OR MORE THICK WHEN USED AS THE TOP LAYER.

2. PERIMETER AND CORNER DIMENSIONS ARE TO BE A MINIMUM OF 8' WIDE UNLESS THE PROJECT REQUIRES FACTORY MUTUAL COMPLIANCE. CONTACT MULE-HIDE TECHNICAL DEPARTMENT FOR FACTORY MUTUAL REQUIREMENTS.

3. MULE-HIDE FASTENERS AND 3" STRESS PLATES MUST BE USED FOR INSULATION ATTACHMENT.

4. REFER TO MULE-HIDE WIND UPLIFT RATINGS FOR APPROPRIATE FASTENER DENSITY REQUIRED.

5. FASTENER DENSITY INCREASES BASED ON THE FOLLOWING:
   - 50% FOR PERIMETERS
   - 100% FOR CORNERS

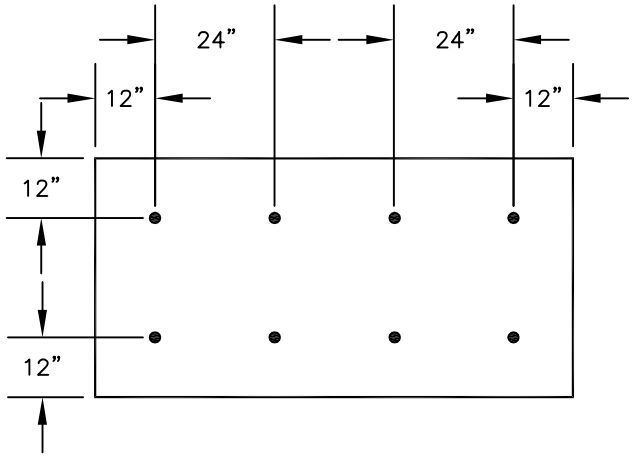

FIELD (8)
1 FASTENER PER EVERY 4 SQ. FT.

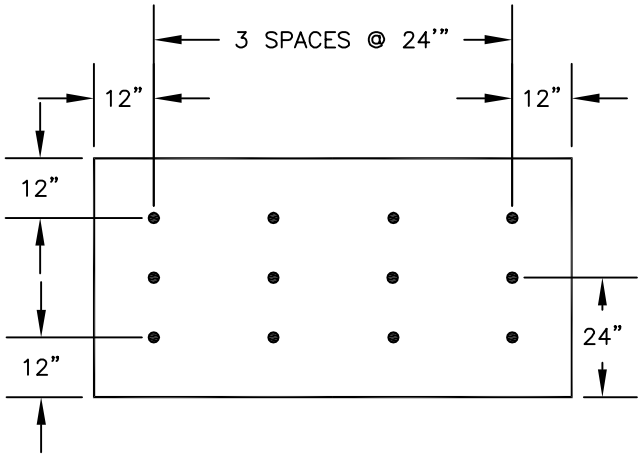

PERIMETER (12)
1 FASTENER PER EVERY 2.66 SQ. FT.

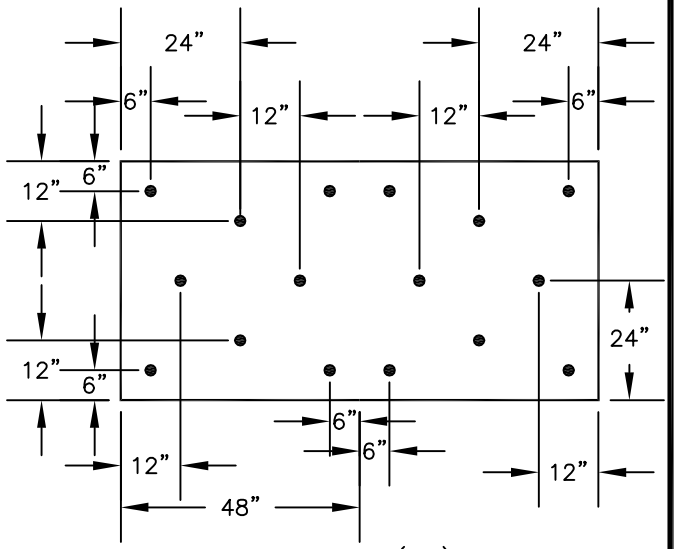

CORNERS (16)
1 FASTENER PER EVERY 2 SQ. FT.

MULE-HIDE PRODUCTS CO., INC.	**2" OR THICKER INSULATION ATTACHMENT 8 FASTENERS PER 4' X 8' IN FIELD** **SYSTEMS:** **FULLY ADHERED**	**DETAIL NO.:** **MHT-FA-720** REVISION DATE: 10/2013

®

NOTES:

1. 12 FASTENERS PER 4' X 8' BOARD IN THE FIELD IS APPROVED FOR 1–1/2" TO 2" THICK POLYISOCYANURATE INSULATIONS WHEN USED AS THE TOP LAYER OR ¼" DENS DECK INSTALLED AS A COVER BOARD.

2. PERIMETER AND CORNER DIMENSIONS ARE TO BE A MINIMUM OF 8' WIDE UNLESS THE PROJECT REQUIRES FACTORY MUTUAL COMPLIANCE. CONTACT MULE–HIDE TECHNICAL DEPARTMENT FOR FACTORY MUTUAL REQUIREMENTS.

3. MULE–HIDE FASTENERS AND 3" STRESS PLATES MUST BE USED FOR INSULATION ATTACHMENT.

4. REFER TO MULE–HIDE WIND UPLIFT RATINGS FOR APPROPRIATE FASTENER DENSITY REQUIRED.

5. FASTENER DENSITY INCREASES BASED ON THE FOLLOWING:
   - 50% FOR PERIMETERS
   - 100% FOR CORNERS

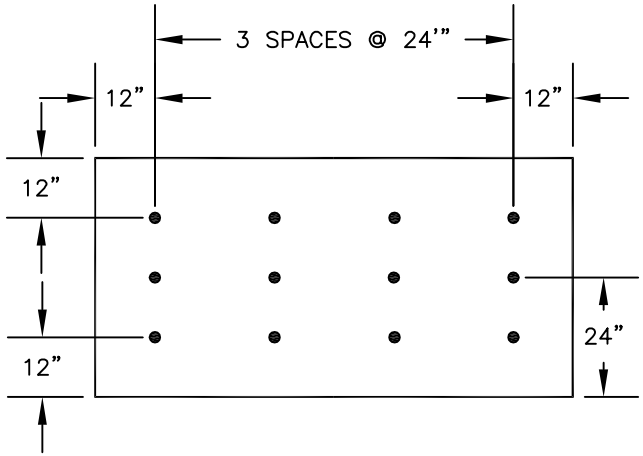

FIELD (12)
1 FASTENER PER EVERY 2.66 SQ. FT.

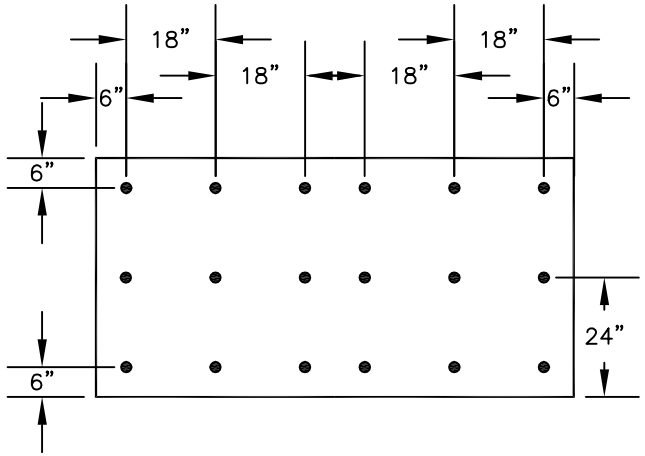

PERIMETER (18)
1 FASTENER PER EVERY 1.77 SQ. FT.

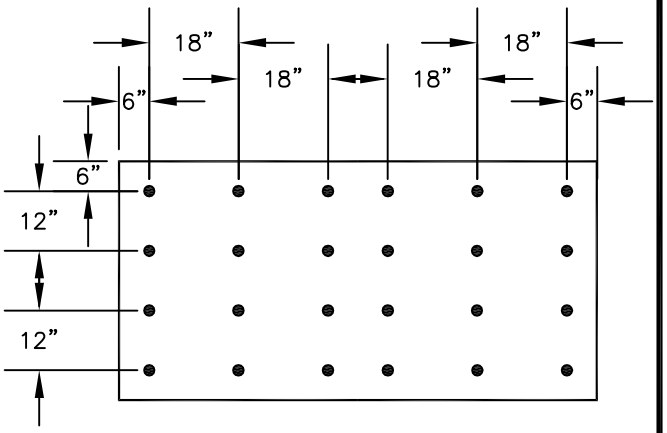

CORNERS (24)
1 FASTENER PER EVERY 1.33 SQ. FT.

MULE-HIDE PRODUCTS CO., INC.	**INSULATION ATTACHMENT** **12 FASTENERS PER 4' X 8' IN FIELD** **SYSTEMS:** **FULLY ADHERED**	**DETAIL NO.:** **MHT-FA-721** REVISION DATE: 10/2013

®

NOTES:

1. 16 FASTENERS PER 4' X 8' BOARD IN THE FIELD IS MULE-HIDE'S STANDARD FOR FULLY ADHERED TPO ROOFING SYSTEMS.

2. PERIMETER AND CORNER DIMENSIONS ARE TO BE A MINIMUM OF 8' WIDE UNLESS THE PROJECT REQUIRES FACTORY MUTUAL COMPLIANCE. CONTACT MULE-HIDE TECHNICAL DEPARTMENT FOR FACTORY MUTUAL REQUIREMENTS.

3. MULE-HIDE FASTENERS AND 3" STRESS PLATES MUST BE USED FOR INSULATION ATTACHMENT.

4. REFER TO MULE-HIDE WIND UPLIFT RATINGS FOR APPROPRIATE FASTENER DENSITY REQUIRED.

5. FASTENER DENSITY INCREASES BASED ON THE FOLLOWING:
   - 50% FOR PERIMETERS
   - 100% FOR CORNERS

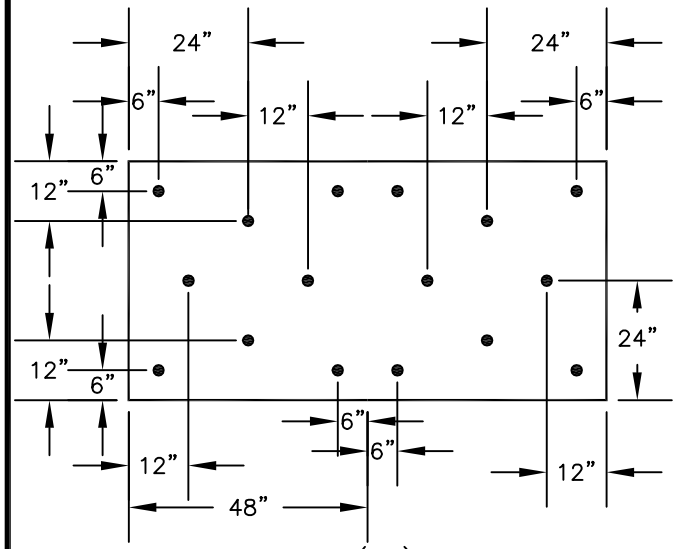

FIELD (16)
1 FASTENER PER EVERY 2 SQ. FT.

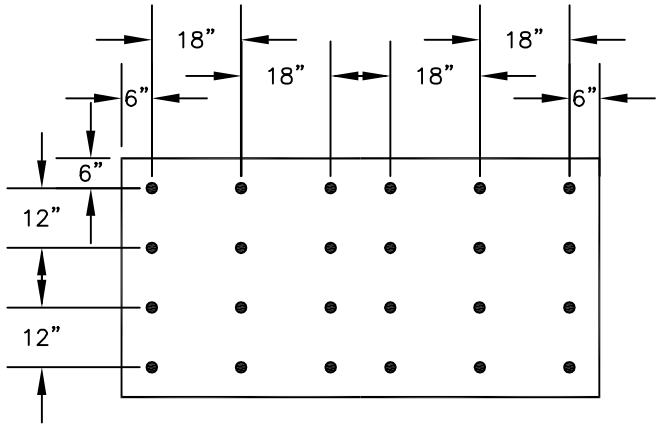

PERIMETER (24)
1 FASTENER PER EVERY 1.33 SQ. FT.

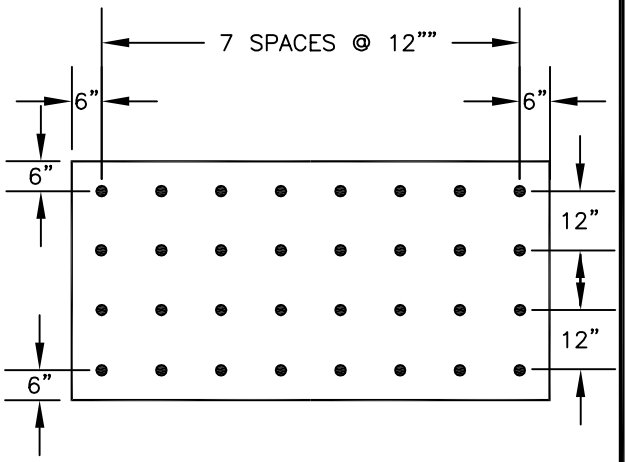

CORNERS (32)
1 FASTENER PER EVERY 1 SQ. FT.

MULE-HIDE PRODUCTS CO., INC.	**INSULATION ATTACHMENT** **16 FASTENERS PER 4' X 8' IN FIELD** **SYSTEMS:** **FULLY ADHERED**	**DETAIL NO.:** **MHT-FA-722** REVISION DATE: 10/2013

®

NOTES:

1. 17 FASTENERS PER 4' X 8' BOARD IN THE FIELD IS APPROVED FOR OSB COVER BOARDS OR OSB/POLYISOCYANURATE COMPOSITE INSULATION.

2. PERIMETER AND CORNER DIMENSIONS ARE TO BE A MINIMUM OF 8' WIDE UNLESS THE PROJECT REQUIRES FACTORY MUTUAL COMPLIANCE. CONTACT MULE-HIDE TECHNICAL DEPARTMENT FOR FACTORY MUTUAL REQUIREMENTS.

3. MULE-HIDE FASTENERS AND 3" STRESS PLATES MUST BE USED FOR INSULATION ATTACHMENT.

4. REFER TO MULE-HIDE WIND UPLIFT RATINGS FOR APPROPRIATE FASTENER DENSITY REQUIRED.

5. FASTENER DENSITY INCREASES BASED ON THE FOLLOWING:
   - 50% FOR PERIMETERS
   - 100% FOR CORNERS

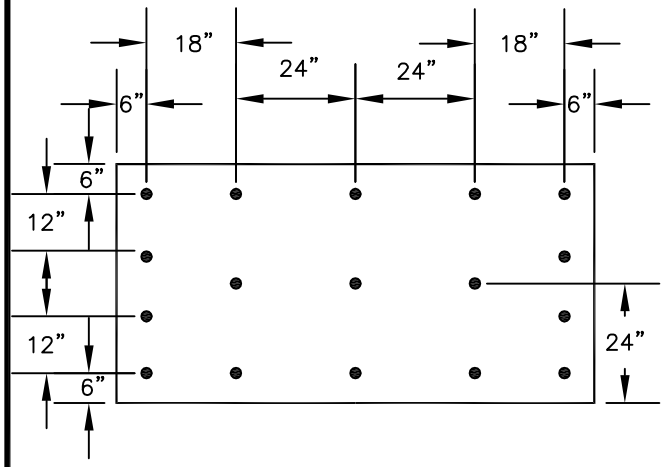

FIELD (17)
1 FASTENER PER EVERY 1.88 SQ. FT.

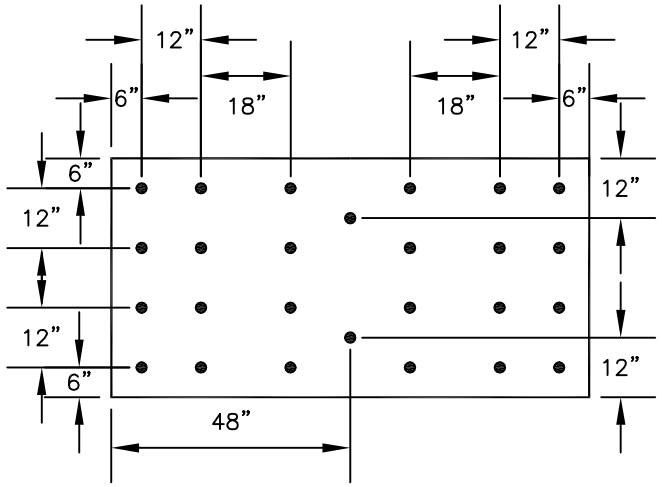

PERIMETER (26)
1 FASTENER PER EVERY 1.23 SQ. FT.

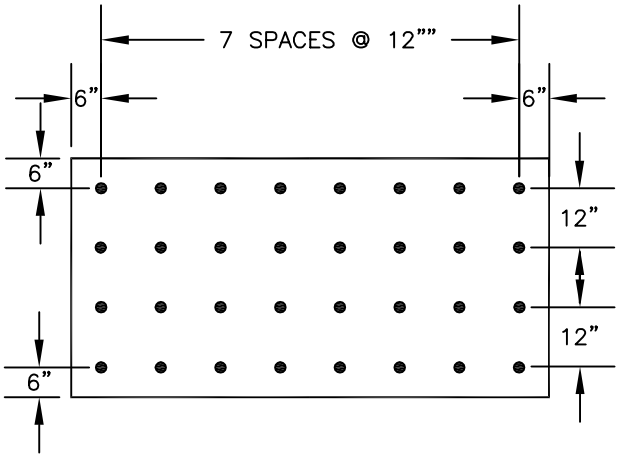

CORNERS (32)
1 FASTENER PER EVERY 1 SQ. FT.

MULE-HIDE PRODUCTS CO., INC.	**INSULATION ATTACHMENT** **17 FASTENERS PER 4' X 8' IN FIELD** **SYSTEMS:** **FULLY ADHERED**	**DETAIL NO.:** **MHT-FA-723** REVISION DATE: 10/2013

®

NOTES:

1. THESE FASTENING PATTERNS ARE TO BE USED WHEN THE PROJECT REQUIRES A FACTORY MUTUAL RATED SYSTEM. CONTACT MULE–HIDE TECHNICAL DEPARTMENT FOR APPROPRIATE USE OF THESE PATTERNS.

2. MULE–HIDE INSULATION FASTENERS AND 3" DIAMETER PLATES MUST BE USED FOR INSULATION ATTACHMENT.

3. REFER TO MULE–HIDE WIND UPLIFT RATINGS FOR APPROPRIATE FASTENER DENSITY REQUIRED.

4. FASTENER DENSITY INCREASES BASED ON THE FOLLOWING:
   - 50% FOR PERIMETERS WITH A MINIMUM OF 1 FASTENER EVERY 2 SQUARE FEET NOT TO EXCEED 1 FASTENER EVERY 1 SQUARE FEET
   - CONSTANT DENSITY OF 1 FASTENER EVERY 1 SQUARE FEET FOR CORNERS.

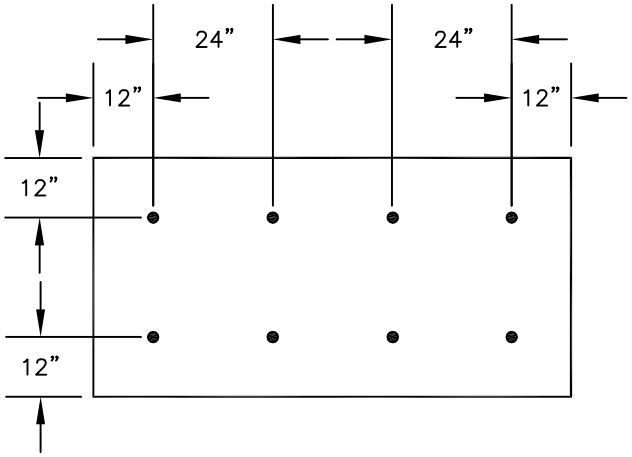

FIELD (8)
1 FASTENER PER EVERY 4 SQ. FT.

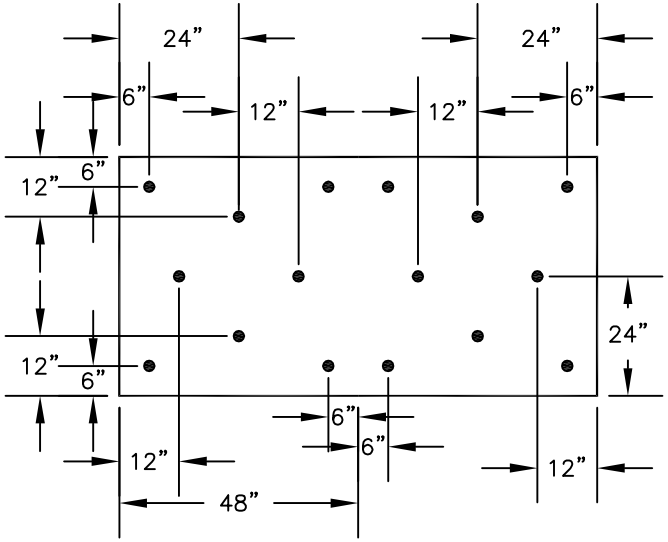

PERIMETER (16)
1 FASTENER PER EVERY 2 SQ. FT.

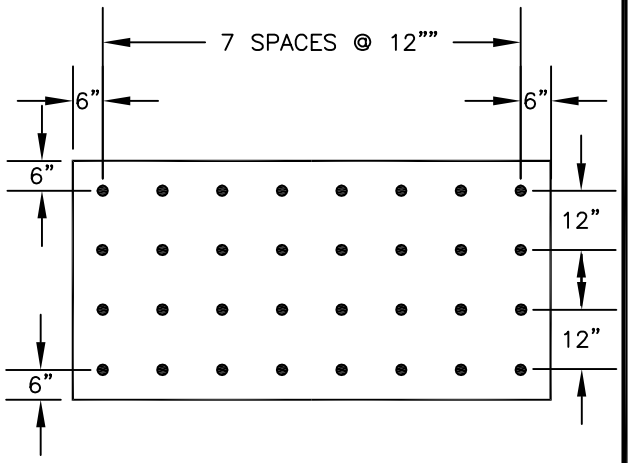

CORNERS (32)
1 FASTENER PER EVERY 1 SQ. FT.

MULE-HIDE PRODUCTS CO., INC.	**FM - 8 FIELD FASTENERS PER 4' X 8' BOARD PATTERN LAYOUT** **SYSTEMS:** **FULLY ADHERED**	**DETAIL NO.:** **MHT-FM-724** REVISION DATE: 10/2013

®

NOTES:

1. THESE FASTENING PATTERNS ARE TO BE USED WHEN THE PROJECT REQUIRES A FACTORY MUTUAL RATED SYSTEM. CONTACT MULE-HIDE TECHNICAL DEPARTMENT FOR APPROPRIATE USE OF THESE PATTERNS.

2. MULE-HIDE INSULATION FASTENERS AND 3" DIAMETER PLATES MUST BE USED FOR INSULATION ATTACHMENT.

3. REFER TO MULE-HIDE WIND UPLIFT RATINGS FOR APPROPRIATE FASTENER DENSITY REQUIRED.

4. FASTENER DENSITY INCREASES BASED ON THE FOLLOWING:
   - 50% FOR PERIMETERS WITH A MINIMUM OF 1 FASTENER EVERY 2 SQUARE FEET NOT TO EXCEED 1 FASTENER EVERY 1 SQUARE FEET
   - CONSTANT DENSITY OF 1 FASTENER EVERY 1 SQUARE FEET FOR CORNERS.

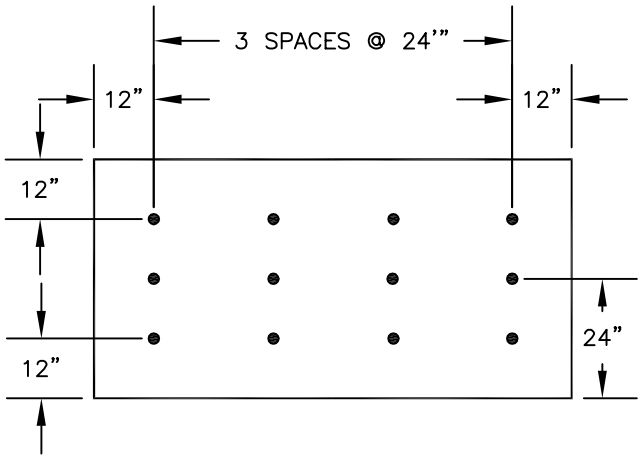

FIELD (12)
1 FASTENER PER EVERY 2.66 SQ. FT.

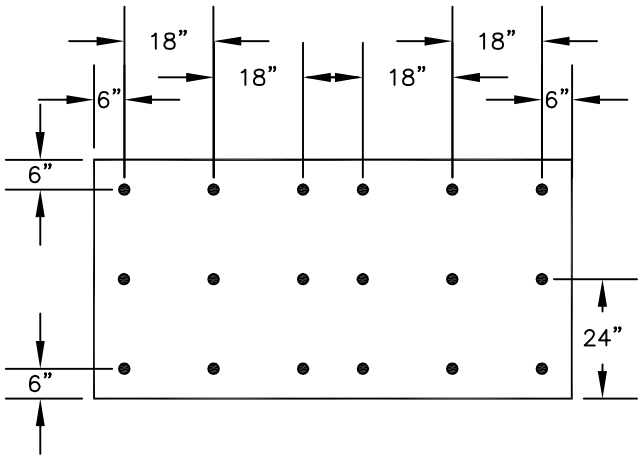

PERIMETER (18)
1 FASTENER PER EVERY 1.77 SQ. FT.

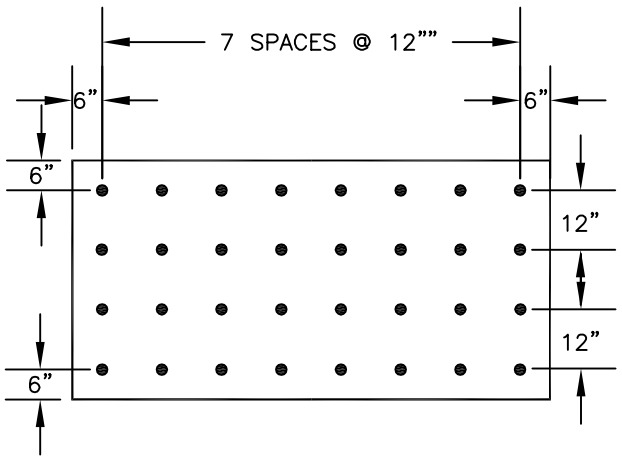

CORNERS (32)
1 FASTENER PER EVERY 1 SQ. FT.

MULE-HIDE PRODUCTS CO., INC.	**FM - 12 FIELD FASTENERS PER 4' X 8' BOARD PATTERN LAYOUT** **SYSTEMS:** **FULLY ADHERED**	**DETAIL NO.:** **MHT-FM-725** REVISION DATE: 10/2013

®

NOTES:

1. THESE FASTENING PATTERNS ARE TO BE USED WHEN THE PROJECT REQUIRES A FACTORY MUTUAL RATED SYSTEM. CONTACT MULE–HIDE TECHNICAL DEPARTMENT FOR APPROPRIATE USE OF THESE PATTERNS.

2. MULE–HIDE INSULATION FASTENERS AND 3" DIAMETER PLATES MUST BE USED FOR INSULATION ATTACHMENT.

3. REFER TO MULE–HIDE WIND UPLIFT RATINGS FOR APPROPRIATE FASTENER DENSITY REQUIRED.

4. FASTENER DENSITY INCREASES BASED ON THE FOLLOWING:
   - 50% FOR PERIMETERS WITH A MINIMUM OF 1 FASTENER EVERY 2 SQUARE FEET NOT TO EXCEED 1 FASTENER EVERY 1 SQUARE FEET
   - CONSTANT DENSITY OF 1 FASTENER EVERY 1 SQUARE FEET FOR CORNERS.

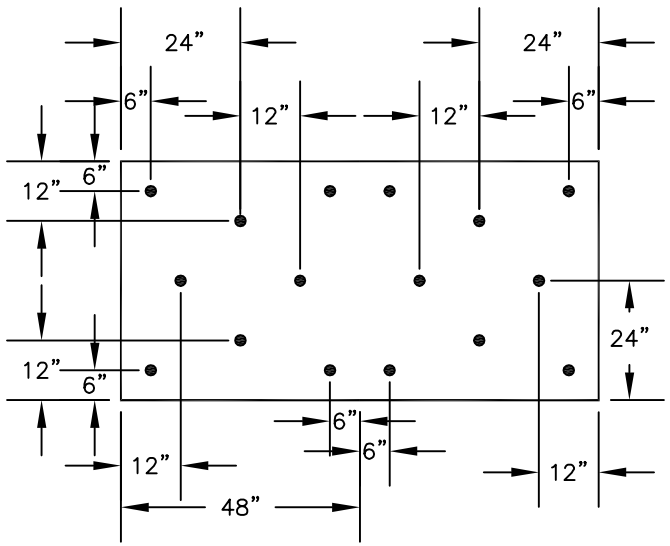

FIELD (16)
1 FASTENER PER EVERY 2 SQ. FT.

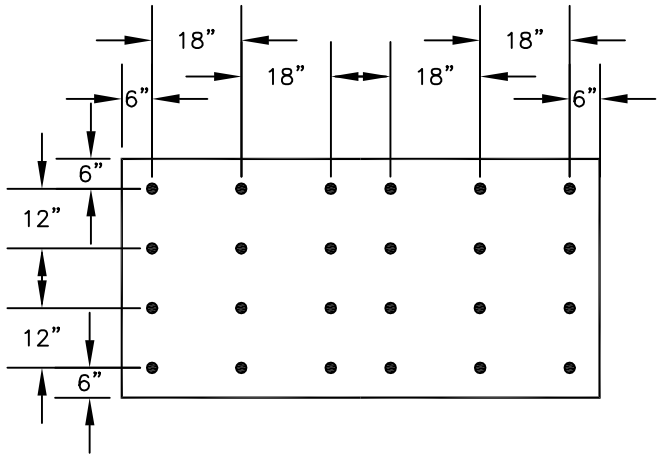

PERIMETER (24)
1 FASTENER PER EVERY 1.33 SQ. FT.

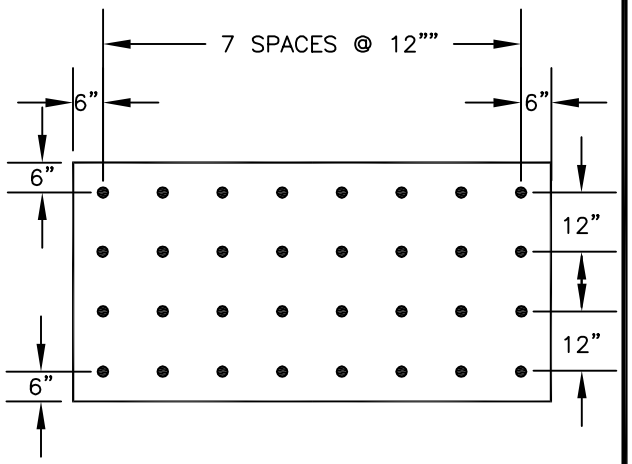

CORNERS (32)
1 FASTENER PER EVERY 1 SQ. FT.

MULE-HIDE PRODUCTS CO., INC.	**FM - 16 FIELD FASTENERS PER 4' X 8' BOARD PATTERN LAYOUT** **SYSTEMS:** **FULLY ADHERED**	**DETAIL NO.:** **MHT-FM-726** REVISION DATE: 10/2013

®

NOTES:

1. THESE FASTENING PATTERNS ARE TO BE USED WHEN THE PROJECT REQUIRES A FACTORY MUTUAL RATED SYSTEM. CONTACT MULE–HIDE TECHNICAL DEPARTMENT FOR APPROPRIATE USE OF THESE PATTERNS.

2. MULE–HIDE INSULATION FASTENERS AND 3" DIAMETER PLATES MUST BE USED FOR INSULATION ATTACHMENT.

3. REFER TO MULE–HIDE WIND UPLIFT RATINGS FOR APPROPRIATE FASTENER DENSITY REQUIRED.

4. FASTENER DENSITY INCREASES BASED ON THE FOLLOWING:
   - 50% FOR PERIMETERS WITH A MINIMUM OF 1 FASTENER EVERY 2 SQUARE FEET NOT TO EXCEED 1 FASTENER EVERY 1 SQUARE FEET
   - CONSTANT DENSITY OF 1 FASTENER EVERY 1 SQUARE FEET FOR CORNERS.

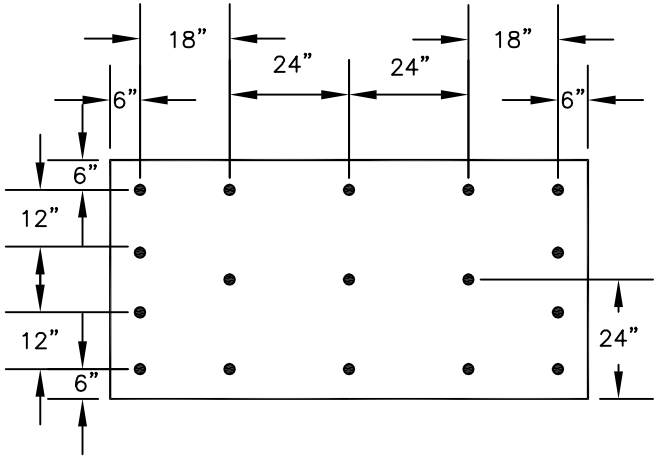

FIELD (17)
1 FASTENER PER EVERY 1.88 SQ. FT.

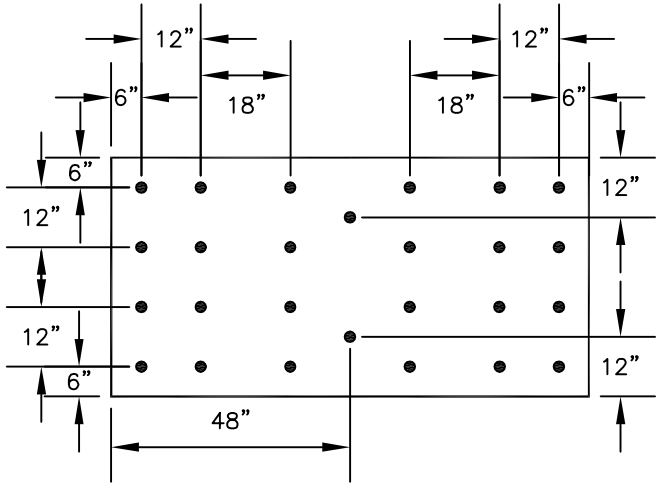

PERIMETER (26)
1 FASTENER PER EVERY 1.23 SQ. FT.

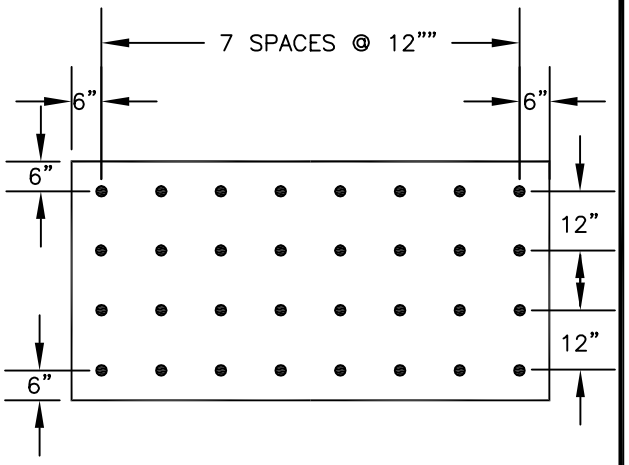

CORNERS (32)
1 FASTENER PER EVERY 1 SQ. FT.

MULE-HIDE PRODUCTS CO., INC.	**FM - 17 FIELD FASTENERS PER 4' X 8' BOARD PATTERN LAYOUT** **SYSTEMS:** **FULLY ADHERED**	**DETAIL NO.:** **MHT-FM-727** REVISION DATE: 10/2013

®